VIN PLATE DECODING INFORMATION

1	2	3	4	5	6	7	8	9	10	11	12 thru 17
Country	**Make**	**Vehicle Type**	**Other**	**Line**	**Series**	**Body Style**	**Engine**	**Check Digit**	**Model Year**	**Assy. Plant**	**Sequence No.**

The following table interprets the VIN Plate position shown above.

Position	Interpretation	Codes = Description
1	Country of Origin	1 = United States
2	Assembler	J = Jeep
3	Vehicle Type	4 = Multipurpose Vehicle
4	GVWR & Pass. Safety	D = 0 - 1360 kg (0-3000 lbs) E = 1361 - 1814 kg (3001 - 4000 lbs) F = 1815 - 2267 kg (4001 - 5000 lbs) G = 2268 - 2721 kg (5001 - 6000 lbs) H = 2722 - 3175 kg (6001 - 7000 lbs) J = 3176 - 3628 kg (7001 - 8000 lbs) K = 3629 - 4082 kg (8001 - 9000 lbs) L = 4083 - 4535 kg (9001 - 10,000 lbs) M = 4536 - 6350 kg (10,001 - 14,000 lbs)
5	Vehicle Line	J = Cherokee 4x4 (LHD), (RHD w/ABB) N = Cherokee 4x4 RHD w/o ABB B = Cherokee 4x2 RHD T = Cherokee 4x2 LHD
6	Series	7 = Limited (United States) 7 = Country (BUX) 6 = Sport 2 = SE
7	Body Style	7 = 2 Door Sport Utility 8 = 4 Door Sport Utility
8	Engine	P = 2.5L Gas Unleaded (EPE) S = 4.0L Gas Unleaded (ERH) V = 4.0L Gas Leaded (ERH) M = 2.5L Diesel (ENC) H = 2.5L Gas Leaded (EPE)
9	Check Digit	0 = Check Digit
10	Model Year	V = 1997
11	Assembly Plant	L = Toledo #1
12 thru 17	Vehicle Build Sequence	Model Year Assembly Sequence

Group - 2

Front Suspension & Drive

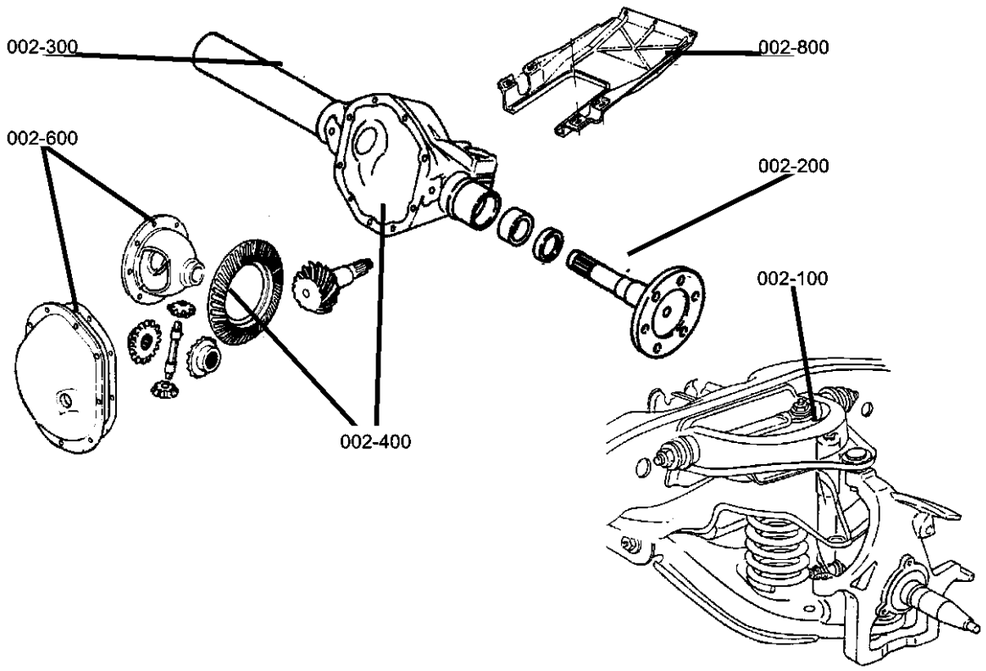

002-100 Front Suspension 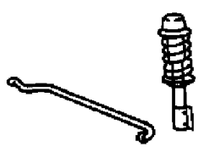	**002-200** Front Axle Drive Shafts 	**002-300** Front Axle Housing 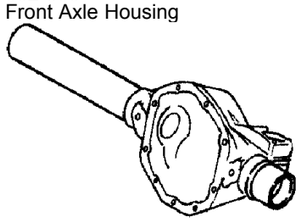	**002-400** Front Axle Assembly 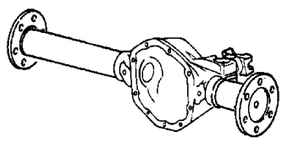
002-600 Front Axle Differential 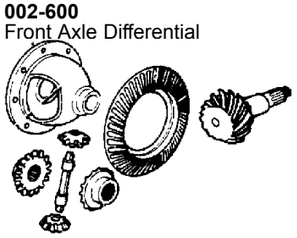			

Group - 2 Front Suspension & Drive

Illustration Title — Group-Fig. No.

Front Suspension
Arms,Control,Upper and Lower ..... Fig. 2 - 110
Springs and Shocks,Front ..... Fig. 2 - 120
Front Stabilizer Bar and Track Bar ..... Fig. 2 - 130

Front Axle Drive Shafts
Shafts, Front Axle ..... Fig. 2 - 210

Front Axle Housing
Housing,Front Axle,2 Wheel Drive ..... Fig. 2 - 310
Housing,Front Axle,4 Wheel Drive ..... Fig. 2 - 320

Front Axle Assembly
Axle Assembly,Front,4 Wheel Drive ..... Fig. 2 - 410

Front Axle Differential
Differential,Front Axle ..... Fig. 2 - 610

Arms,Control,Upper and Lower
Figure 2-110

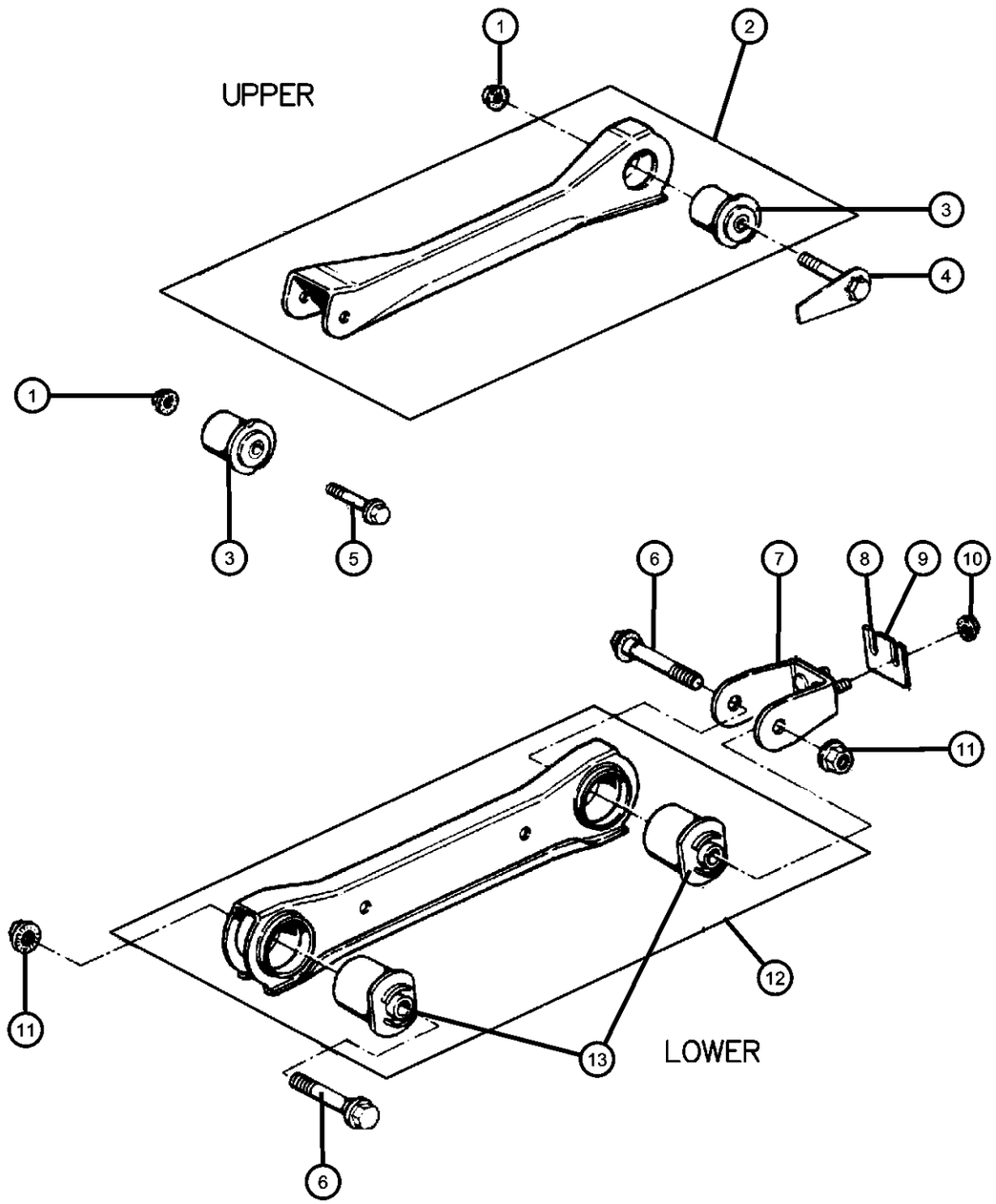

ITEM	PART NUMBER	QTY	LINE	SERIES	BODY	ENGINE	TRANS	TRIM	DESCRIPTION
1	11506007	4							NUT, Hex Flange, M10x1.5, UCA to Sill and Axle, Mounting
2	52087710	2							ARM, ControlUpper
3	52038025	2							BUSHING, Control Arm, UCA to Sill and Axle
4	06505153AA	2							BOLT, M10x1.50x85, UCA to Sill, Mounting
5	06505154AA	2							BOLT, UCA to Axle, Mounting
6	34201334	4							BOLT, Hex Flange Head, M14x2.00x110, LCA to Clevis and Axle, Mounting
7	52000532	2							CLEVIS, Lower Suspension Arm, To Sill
8	52000234	AR							SHIM, Control Arm, Caster and Pinion Angle Adjusting-.9mm Thick
9	52003976	AR							SHIM, Pinion Angle, Caster and Pinion Angle Adjusting-.4mm Thick
10	06101695	4							NUT, Hex Flange Lock, Clevis to Sill, Mounting
11	11502814	4							NUT, Hex Flange Lock, M14z2, LCA to Clevis and Axle, Mounting
12	52001162	2							ARM, ControlLower
13	52001161	4							BUSHING, Control ArmLower

CHEROKEE (XJ)

SERIES	LINE	BODY	ENGINE	TRANSMISSION
L = LOWLINE	T = JEEP - 2WD B = JEEP - 2WD (RHD) J = JEEP - 4WD U = JEEP - 4WD (RHD)	72 = SPORT UTILITY 2-DR 74 = SPORT UTILITY 4-DR	ENC = 2.5L 4 Cyl Turbo Diesel Engine EPB = 2.5L 4 Cylinder Engine EPE = Engine - 2.5L Power Tech I-4 Cyl. ERH = 4.0L Power Tech I-6 Engine	DDQ = 5-Speed Manual Transmission DGS = 4-Speed Automatic AW4 Transmission DGO = ALL AUTOMATIC TRANSMISSIONS DBB = ALL MANUAL TRANSMISSIONS

AR = use ase required - = Non illustrrated part

Springs and Shocks,Front
Figure 2-120

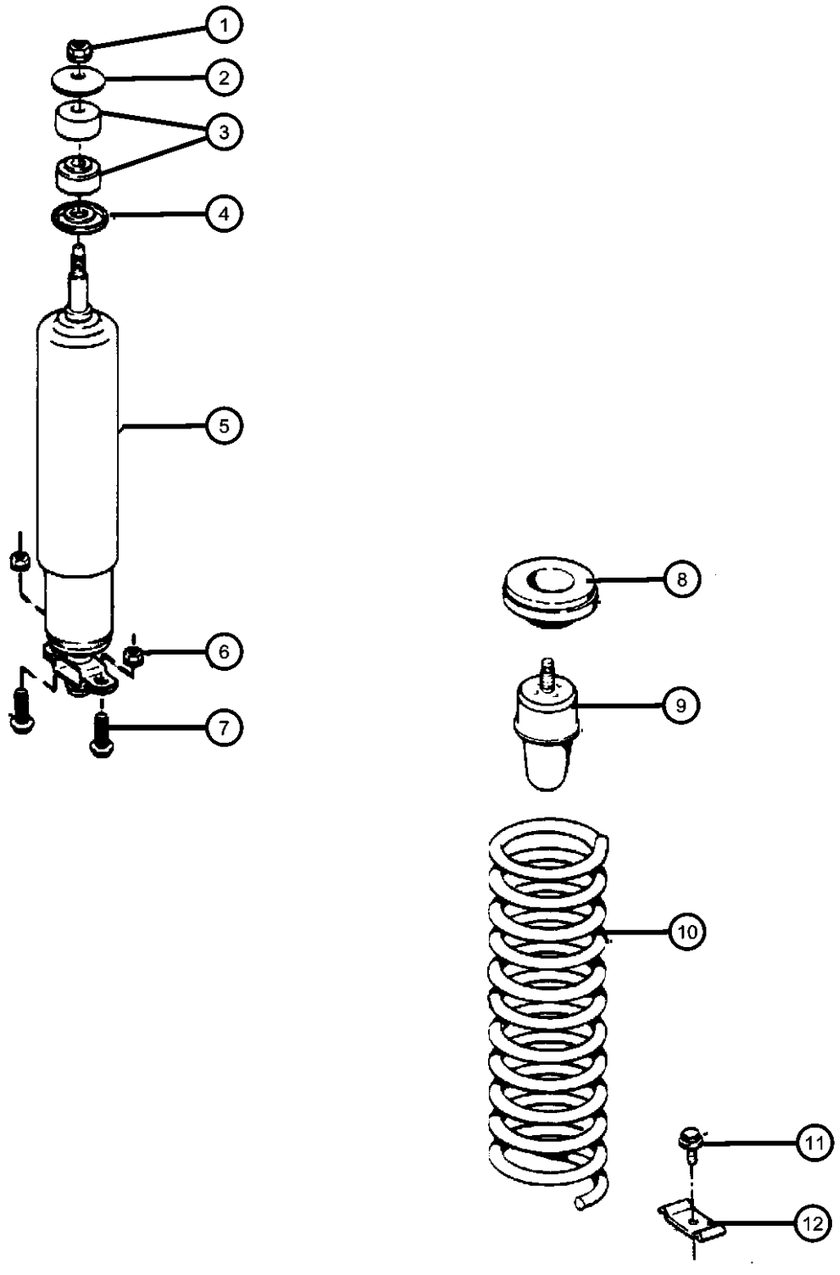

ITEM	PART NUMBER	QTY	LINE	SERIES	BODY	ENGINE	TRANS	TRIM	DESCRIPTION
Note:Sales Codes; [SDA]=Suspension - Normal Duty [SDB]=Suspension - Heavy Duty [SDU]=Shocks - High Pressure Gas Charged [ZFD] Thru [ZVJ]= Spring Group Types, Found on Individual Vehicle Sales Code Listing.									
1	06502556	2							NUT, Hex, M10-1.5, Upper Shock, Mounting
2	52038805	2							RETAINER, Shock Absorber, Upper Shock, Mounting
3	52087768	2							GROMMET, Shock Absorber, Upper Shock, Mounting
4	52038809	2							RETAINER, Shock Absorber, Lower Shock, Mounting
5									SHOCK ABSORBER PACKAGE, Suspension, Front
	04897412AA	2	J, U						[SDU]
	04897413AA	2							[SDA]
	04897414AA	2							[SDB]
6	06101695	4							NUT, Hex Flange Lock, Lower Shock, Mounting
7	06502555	4							BOLT, M8x1.25x30, Lower Shock, Mounting
8	52000229	2							ISOLATOR, Spring, Upper
9	52004295	2							BUMPER, Jounce, Upper
10									SPRING, Front Coil
	52001113	1							[ZUD,ZFD]
	52001114	1							[ZUE,ZFE]
	52001115	1							[ZUF,ZFF]
	52001116	1							[ZUG,ZFG]
	52001117	1							[ZUH,ZFH]
	52001118	1							[ZUJ,ZFJ]
	52001119	1							[ZUK,ZFK]
	52001120	1							[ZVD,ZGD]
	52001121	1							[ZVE,ZGE]
	52001122	1							[ZVF,ZGF]
	52001123	1							[ZVG,ZGG]
	52001124	1							[ZVH,ZGH]
	52001125	1							[ZVJ,ZGJ]

CHEROKEE (XJ)

SERIES	LINE	BODY	ENGINE	TRANSMISSION
L = LOWLINE	T = JEEP - 2WD B = JEEP - 2WD (RHD) J = JEEP - 4WD U = JEEP - 4WD (RHD)	72 = SPORT UTILITY 2-DR 74 = SPORT UTILITY 4-DR	ENC = 2.5L 4 Cyl Turbo Diesel Engine EPB = 2.5L 4 Cylinder Engine EPE = Engine - 2.5L Power Tech I-4 Cyl. ERH = 4.0L Power Tech I-6 Engine	DDQ = 5-Speed Manual Transmission DGS = 4-Speed Automatic AW4 Transmission DGO = ALL AUTOMATIC TRANSMISSIONS DBB = ALL MANUAL TRANSMISSIONS

Springs and Shocks,Front
Figure 2-120

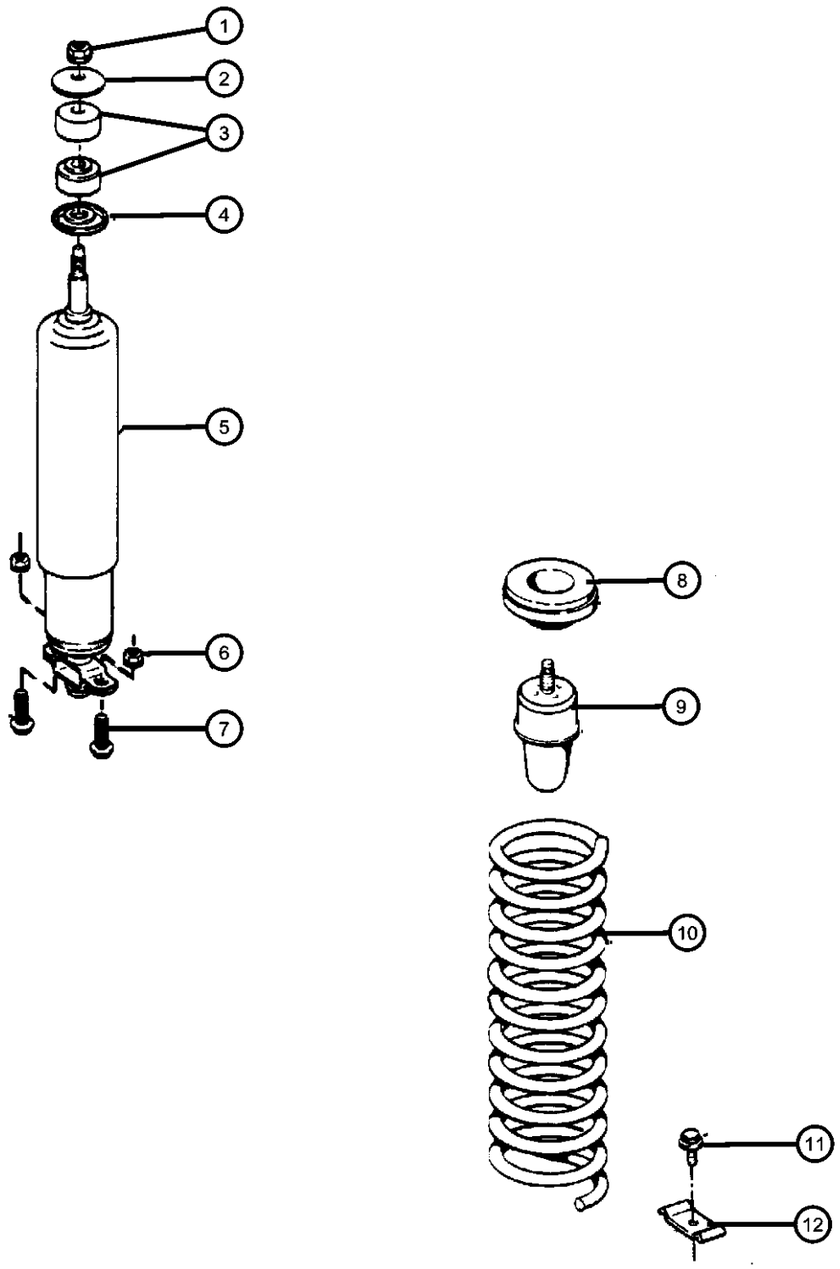

ITEM	PART NUMBER	QTY	LINE	SERIES	BODY	ENGINE	TRANS	TRIM	DESCRIPTION
	52001793	1							[ZVK,ZGK]
	52001794	1							[ZVL,ZGL]
11	34201888	2							SCREW, Hex Head, Lower Front Coil, Mounting
12	53000899	2							BRACKET, Spring, Lower Front Coil, Mounting

CHEROKEE (XJ)

SERIES	LINE	BODY	ENGINE	TRANSMISSION
L = LOWLINE	T = JEEP - 2WD B = JEEP - 2WD (RHD) J = JEEP - 4WD U = JEEP - 4WD (RHD)	72 = SPORT UTILITY 2-DR 74 = SPORT UTILITY 4-DR	ENC = 2.5L 4 Cyl Turbo Diesel Engine EPB = 2.5L 4 Cylinder Engine EPE = Engine - 2.5L Power Tech I-4 Cyl. ERH = 4.0L Power Tech I-6 Engine	DDQ = 5-Speed Manual Transmission DGS = 4-Speed Automatic AW4 Transmission DGO = ALL AUTOMATIC TRANSMISSIONS DBB = ALL MANUAL TRANSMISSIONS

Front Stabilizer Bar and Track Bar
Figure 2-130

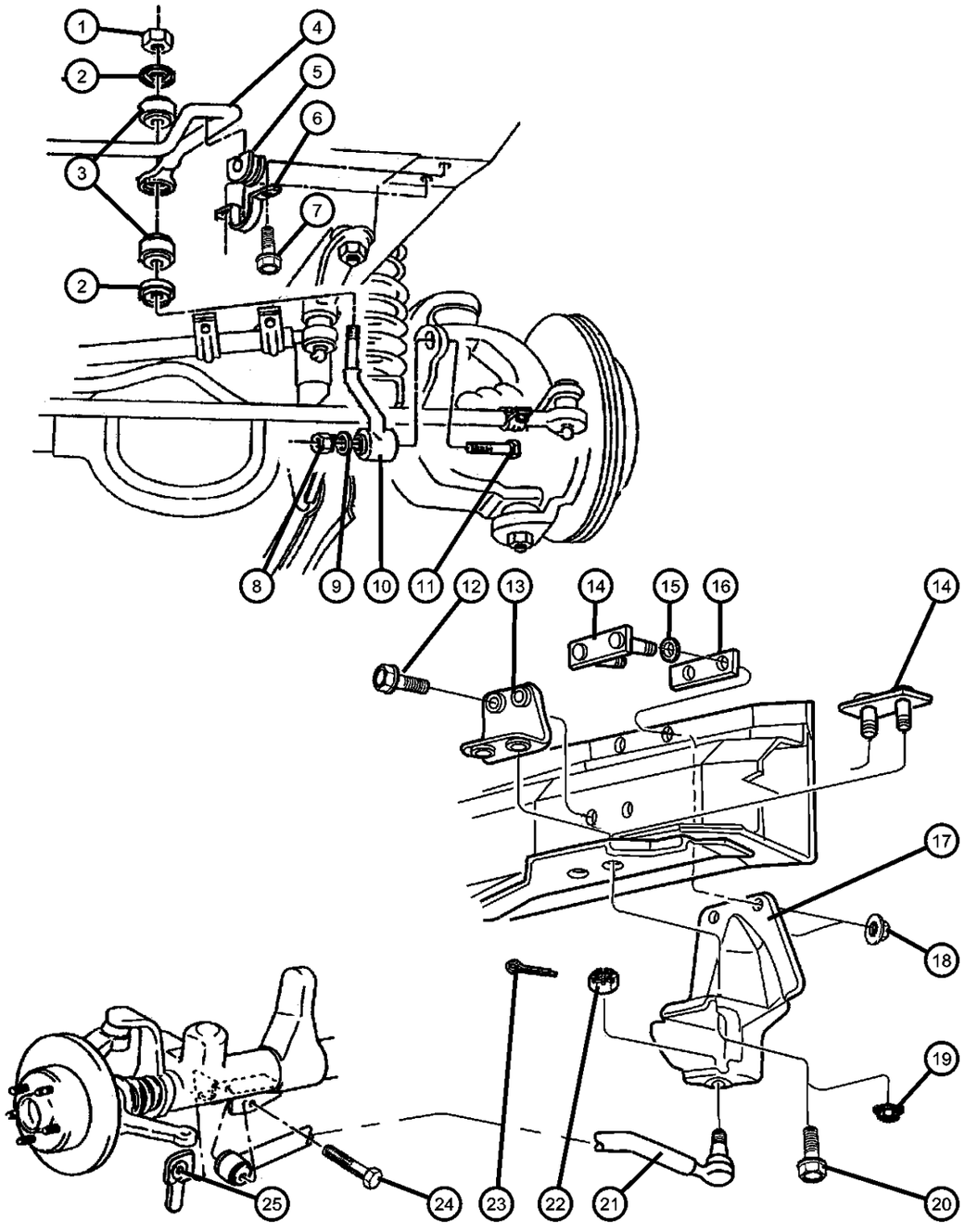

ITEM	PART NUMBER	QTY	LINE	SERIES	BODY	ENGINE	TRANS	TRIM	DESCRIPTION
Note; Sales Codes; [ENC]=Engine - 2.5L Diesel [EP0]=Engines - All 2.5L Gas [ER0]=Engines - All 4.0L Gas									
1	53000899	2							NUT, M10x1.50, (NOT SERVICED)
2	52087668	4							RETAINER, Stabilizer Bar GrommetMounting
3	52001132	4							GROMMET, Stabilizer BarMounting
4	52087859	1							BAR, Front Sway
5	52088523	2							CUSHION, Sway EliminatorMount-ing
6	52087865	2							RETAINER, Stabilizer Bar GrommetMounting
7	34201540	4							BOLT AND WASHER, Implement Attaching, Sway Bar Retainer, Mounting
8	06502697	2							NUT, Hex Flange Lock, M12x1.75, Sway Bar Link to Axle, Mounting
9	06502697	2							WASHER, Flat, (NOT SERVICED)
10	52037849	2							LINK, Sway EliminatorMounting
11	06503032	2							SCREW, Pan Head, M12 x 1.75 x 58.00, Sway Bar Link to Axle, Mounting
12									BOLT, Hex Flange Head, M10x1.50x35
	06502137	2				ENC			Reinforcement, Mounting
		2	B			EP0, ER0			Reinforcement, Mounting
13									REINFORCEMENT, Track Bar
	52037507	1	B, U						Mounting
	52087861	1	J, T			ENC			Mounting
14									PLATE, Track Bar
	52001493	1	B, U			EP0			Mounting
		1	J, T			EP0			Mounting
15	J0120396	1	B, U						WASHER, Flat, .531x1.09
16	J0120396	1							BRACKET, Sill, (NOT SERVICED)
17									BRACKET, Track Bar
	52006508	1	B, U						Mounting
	52007121	1	J, T						Mounting

CHEROKEE (XJ)

SERIES	LINE	BODY	ENGINE	TRANSMISSION
L = LOWLINE	T = JEEP - 2WD B = JEEP - 2WD (RHD) J = JEEP - 4WD U = JEEP - 4WD (RHD)	72 = SPORT UTILITY 2-DR 74 = SPORT UTILITY 4-DR	ENC = 2.5L 4 Cyl Turbo Diesel Engine EPB = 2.5L 4 Cylinder Engine EPE = Engine - 2.5L Power Tech I-4 Cyl. ERH = 4.0L Power Tech I-6 Engine	DDQ = 5-Speed Manual Transmission DGS = 4-Speed Automatic AW4 Transmission DGO = ALL AUTOMATIC TRANSMISSIONS DBB = ALL MANUAL TRANSMISSIONS

Front Stabilizer Bar and Track Bar
Figure 2-130

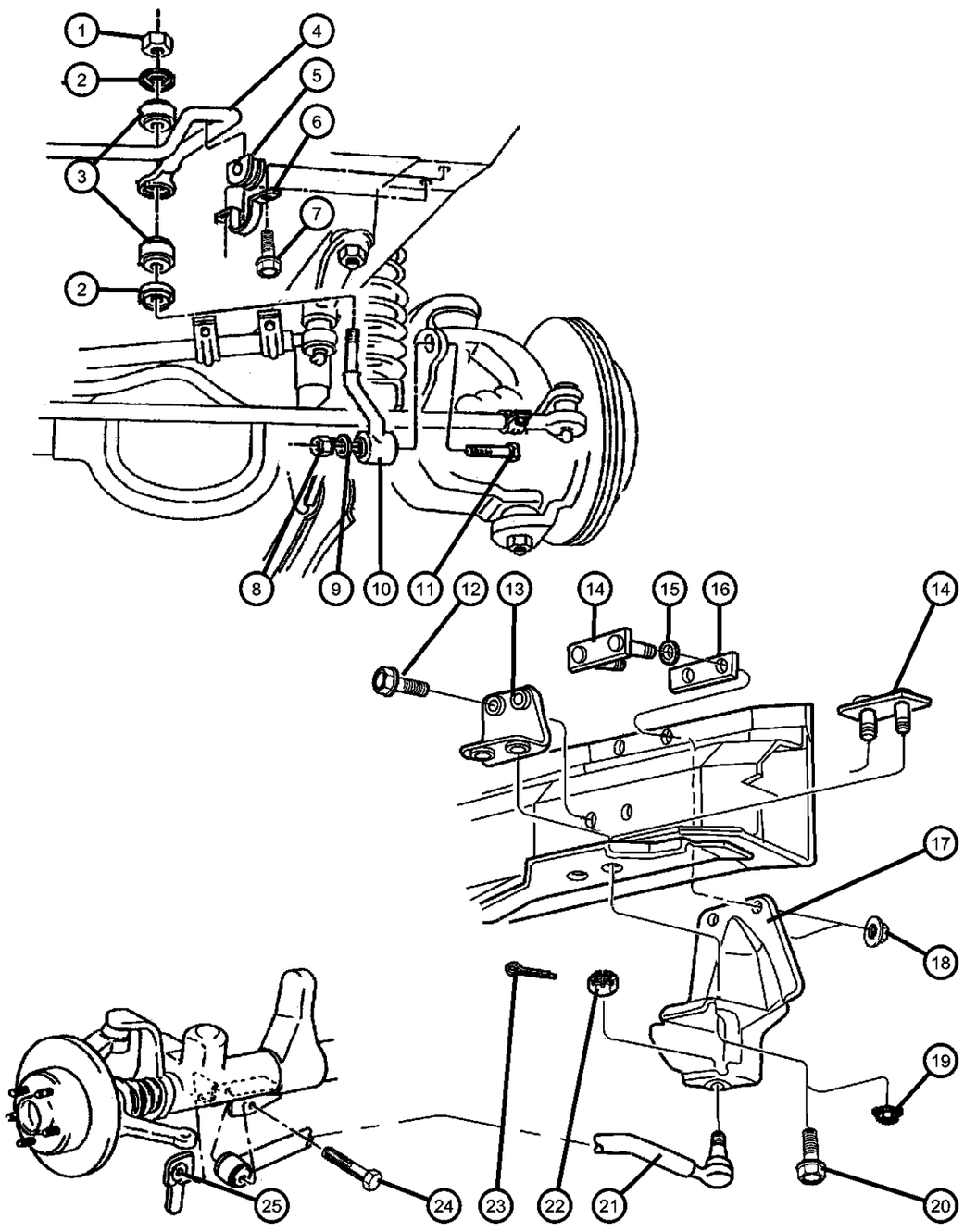

ITEM	PART NUMBER	QTY	LINE	SERIES	BODY	ENGINE	TRANS	TRIM	DESCRIPTION
18	06502697	2							NUT, Hex Flange Lock, M12x1.75, Bracket to Reinforcement, Mounting
19	06502697	2							NUT, Hex Flange Lock, M12x1.75, Bracket to Track Bar Plate, Mounting
20	34201964	2							BOLT, Hex Flange Head, M12x1.75x40, Bracket to Reinforcement, Mounting
21									BAR, Track
	52007118	1	J, T						
	53054317	1	B, U						
22	J0274428	1							NUT, Hex Slotted, Track Bar to Bracket, Mounting
23	34202101	1							PIN, Cotter, Track Bar, Mounting
24	34202101	1							SCREW AND WASHER, Hex Head, M10x1.5x70, (NOT SERVICED)
25	52087888	1	B, U						NUT, Hex Flange Lock, M14x1.50, Track Bar To Axle, Mounting

CHEROKEE (XJ)

SERIES	LINE	BODY	ENGINE	TRANSMISSION
L = LOWLINE	T = JEEP - 2WD B = JEEP - 2WD (RHD) J = JEEP - 4WD U = JEEP - 4WD (RHD)	72 = SPORT UTILITY 2-DR 74 = SPORT UTILITY 4-DR	ENC = 2.5L 4 Cyl Turbo Diesel Engine EPB = 2.5L 4 Cylinder Engine EPE = Engine - 2.5L Power Tech I-4 Cyl. ERH = 4.0L Power Tech I-6 Engine	DDQ = 5-Speed Manual Transmission DGS = 4-Speed Automatic AW4 Transmission DGO = ALL AUTOMATIC TRANSMISSIONS DBB = ALL MANUAL TRANSMISSIONS

Shafts, Front Axle
Figure 2-210

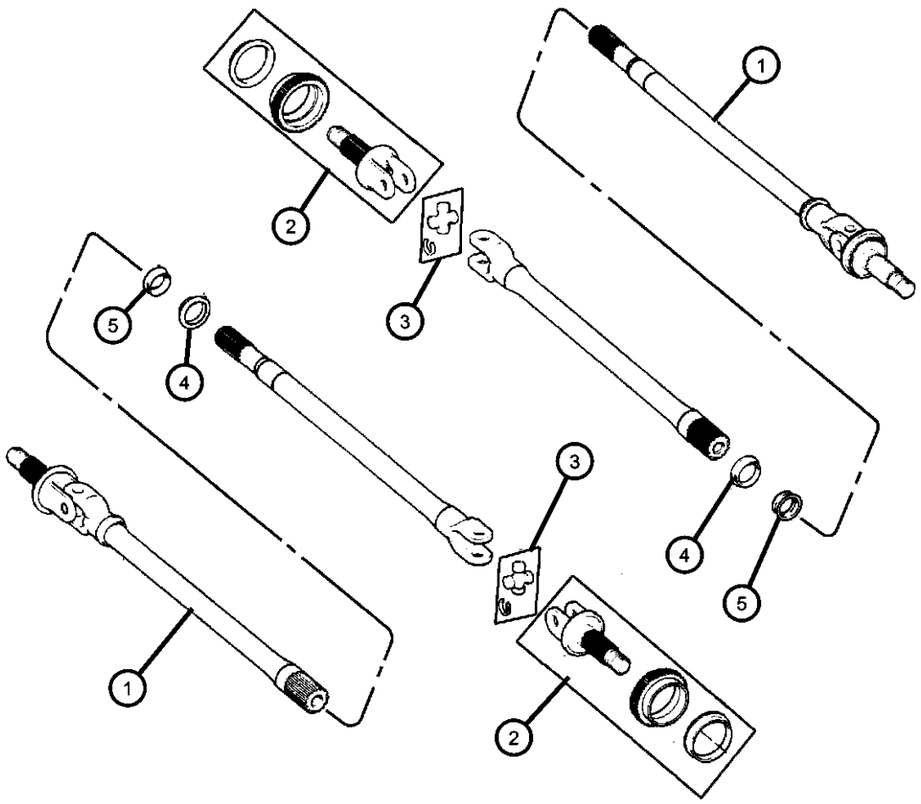

ITEM	PART NUMBER	QTY	LINE	SERIES	BODY	ENGINE	TRANS	TRIM	DESCRIPTION
Note;Sales Codes:									
[BGA]=Brakes - Power Front Disc/Rear Drum									
[BGK]=Brakes - 4 Wheel Anti-Lock									
[ENC]=Engine - 2.5L 4 Cylinder Turbo Diesel									
1									SHAFT, Axle
	04874302	1	U			ENC			[BGA], Right
		1	J						[BGA], Right
	04874303	1	U			ENC			[BGA], Left
		1	J						[BGA], Left
	04874306	1	U			ENC			[BGK], Right
		1	J						[BGK], Right
	04874307	1	U			ENC			[BGK], Left
		1	J						[BGK], Left
2									SHAFT, Stub
	04728984	2	U			ENC			[BGK], Right or Left
		2	J						[BGK], Right or Left
	83500184	2	U			ENC			[BGA], Right or Left
		2	J						[BGA], Right or Left
3									U JOINT, Front Axle
	04137757	2	J						
		2	U			ENC			
4									SLINGER, Oil
	04882135	2	U			ENC			
		2	J						
5									SEAL, Axle Drive Shaft
	04874477	2	J						
		2	U			ENC			

CHEROKEE (XJ)

SERIES	LINE	BODY	ENGINE	TRANSMISSION
L = LOWLINE	T = JEEP - 2WD B = JEEP - 2WD (RHD) J = JEEP - 4WD U = JEEP - 4WD (RHD)	72 = SPORT UTILITY 2-DR 74 = SPORT UTILITY 4-DR	ENC = 2.5L 4 Cyl Turbo Diesel Engine EPB = 2.5L 4 Cylinder Engine EPE = Engine - 2.5L Power Tech I-4 Cyl. ERH = 4.0L Power Tech I-6 Engine	DDQ = 5-Speed Manual Transmission DGS = 4-Speed Automatic AW4 Transmission DGO = ALL AUTOMATIC TRANSMISSIONS DBB = ALL MANUAL TRANSMISSIONS

Housing,Front Axle,2 Wheel Drive
Figure 2-310

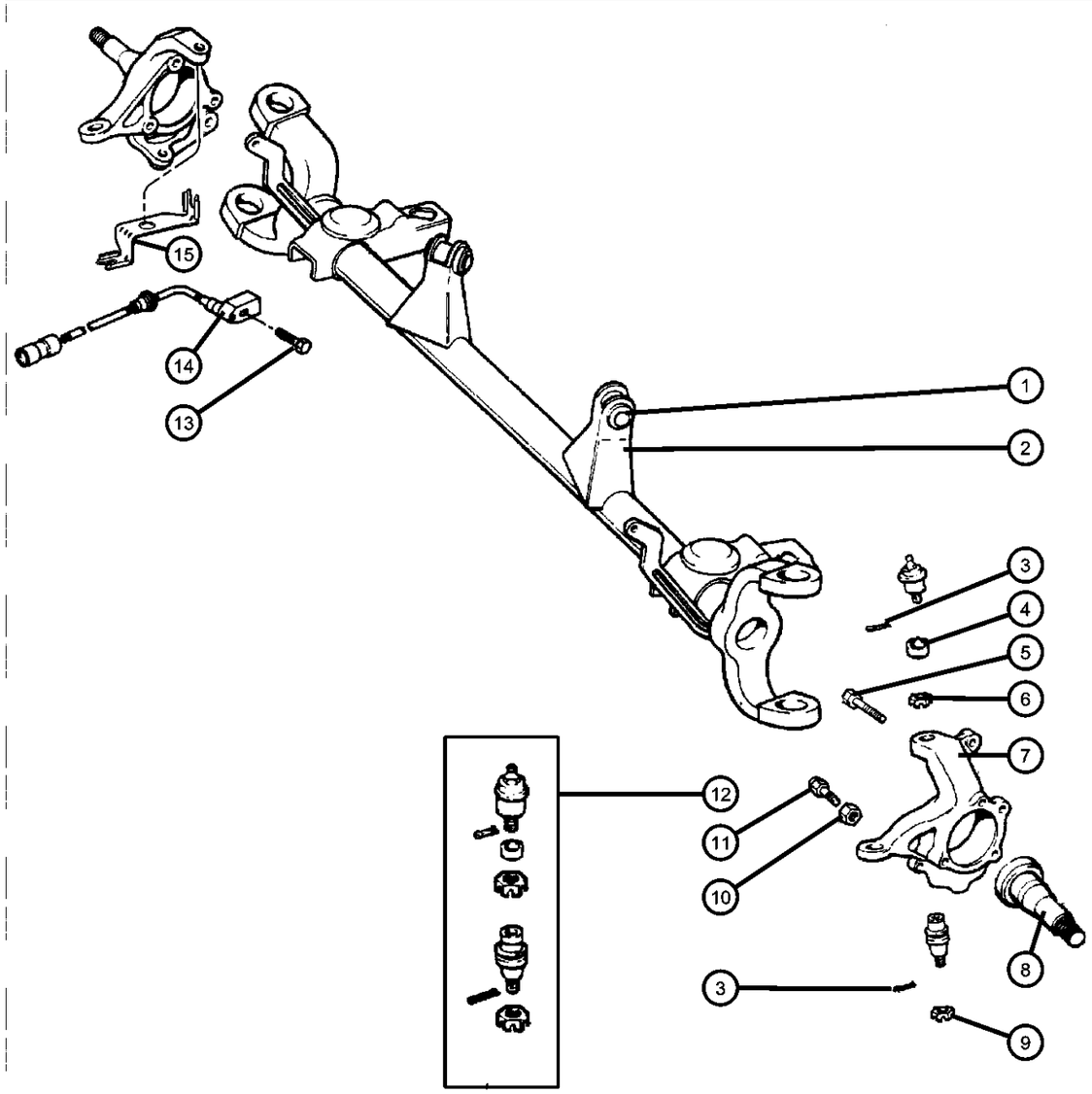

ITEM	PART NUMBER	QTY	LINE	SERIES	BODY	ENGINE	TRANS	TRIM	DESCRIPTION
1									BUSHING, Control Arm
	52038025	2	T						
		2	B						
2									HOUSING, Front Axle
	04773430	1	B						
	04773452	1	T						
3									PIN, Cotter
	J8121392	1	B						
		1	T						
4									RING, Ball Joint
	83500203	2	T						
		2	B						
5									BOLT
	34201535	6	T						
		6	B						
6									NUT, Steering Knuckle Socket
	J0125258	2	T						
		2	B						
7									KNUCKLE, Front
	52067576	1	T						Right
		1	B						Right
	52067577	1	T						Left
		1	B						Left
8									SHAFT, Dummy
	04741011	2	T						Right or Left
		2	B						Right or Left
9									NUT
	J8123318	2	T						
		2	B						
10									NUT, Steering Knuckle
	S0114494	2	T						Stop
		2	B						Stop
11									BOLT, Steering Knuckle Stop

CHEROKEE (XJ)

SERIES	LINE	BODY	ENGINE	TRANSMISSION
L = LOWLINE	T = JEEP - 2WD B = JEEP - 2WD (RHD) J = JEEP - 4WD U = JEEP - 4WD (RHD)	72 = SPORT UTILITY 2-DR 74 = SPORT UTILITY 4-DR	ENC = 2.5L 4 Cyl Turbo Diesel Engine EPB = 2.5L 4 Cylinder Engine EPE = Engine - 2.5L Power Tech I-4 Cyl. ERH = 4.0L Power Tech I-6 Engine	DDQ = 5-Speed Manual Transmission DGS = 4-Speed Automatic AW4 Transmission DGO = ALL AUTOMATIC TRANSMISSIONS DBB = ALL MANUAL TRANSMISSIONS

Housing,Front Axle,2 Wheel Drive
Figure 2-310

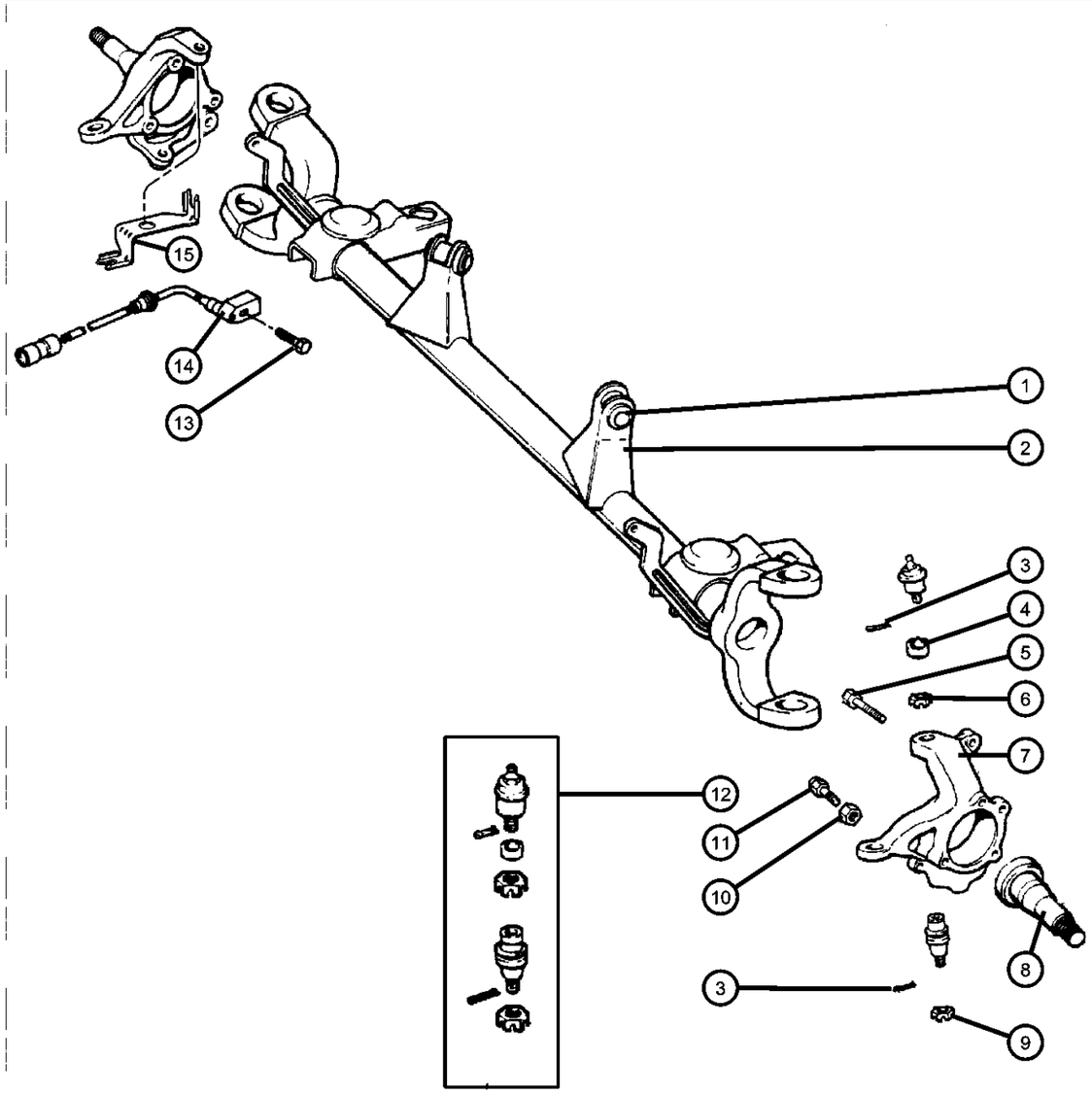

ITEM	PART NUMBER	QTY	LINE	SERIES	BODY	ENGINE	TRANS	TRIM	DESCRIPTION
	01791701	2	T						
		2	B						
12									BALL JOINT KIT, Knuckle
	83500202	2	T						
		2	B						
13									BOLT
	83504920	2	B						ABS Sensor, Mounting
		2	T						ABS Sensor, Mounting
14									SENSOR, Anti-Lock Brakes
	56005217	2	T						
		2	B						
15									BRACKET, Brake Sensor
	56026766	1	T						Right
		1	B						Right
	56026767	1	T						Left
		1	B						Left

CHEROKEE (XJ)

SERIES	LINE	BODY	ENGINE	TRANSMISSION
L = LOWLINE	T = JEEP - 2WD B = JEEP - 2WD (RHD) J = JEEP - 4WD U = JEEP - 4WD (RHD)	72 = SPORT UTILITY 2-DR 74 = SPORT UTILITY 4-DR	ENC = 2.5L 4 Cyl Turbo Diesel Engine EPB = 2.5L 4 Cylinder Engine EPE = Engine - 2.5L Power Tech I-4 Cyl. ERH = 4.0L Power Tech I-6 Engine	DDQ = 5-Speed Manual Transmission DGS = 4-Speed Automatic AW4 Transmission DGO = ALL AUTOMATIC TRANSMISSIONS DBB = ALL MANUAL TRANSMISSIONS

Housing,Front Axle,4 Wheel Drive
Figure 2-320

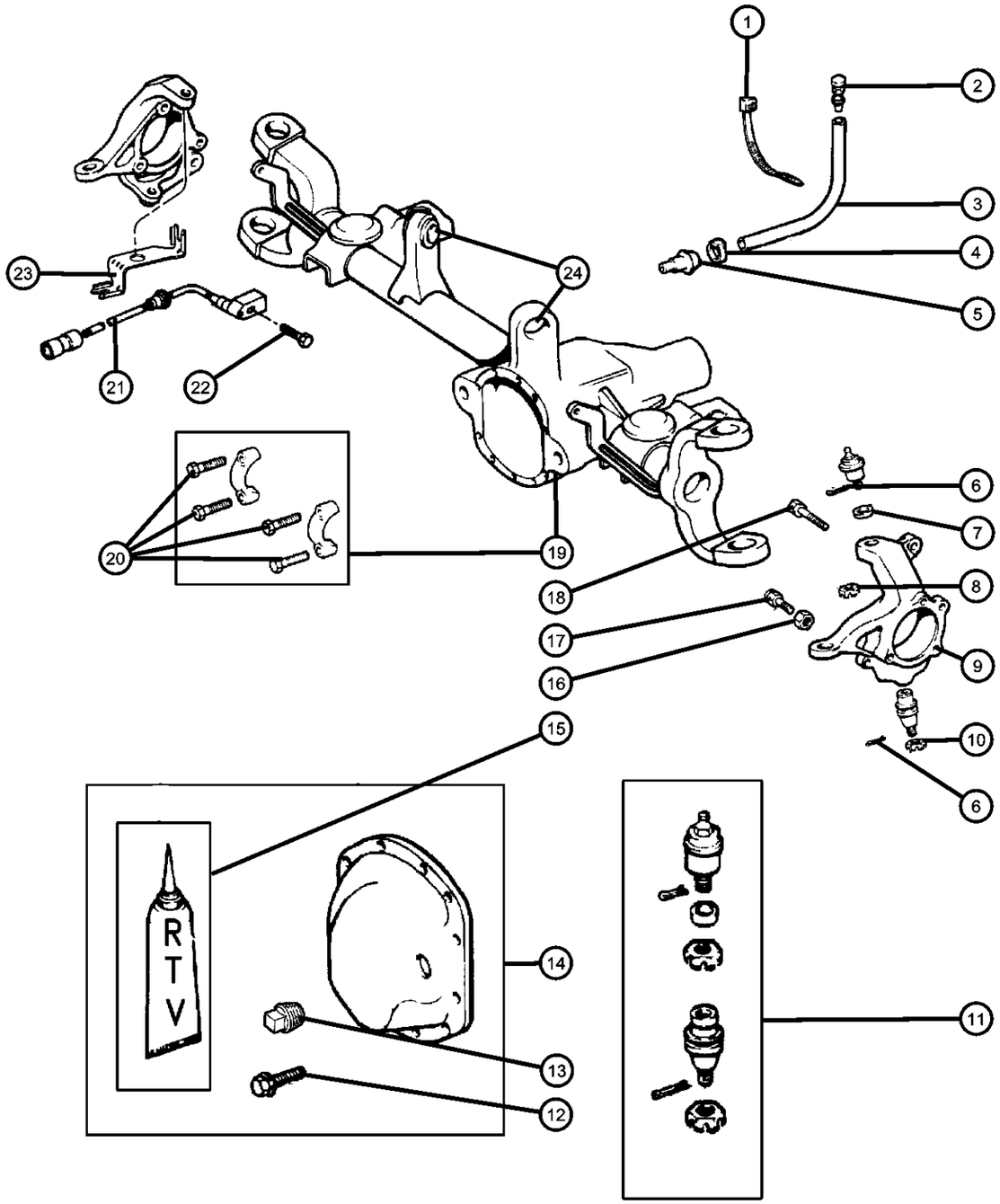

ITEM	PART NUMBER	QTY	LINE	SERIES	BODY	ENGINE	TRANS	TRIM	DESCRIPTION
Note: Sales Codes; [ENC]=Engine - 2.5L 4 Cylinder Turbo Diesel [EN0]=Engines - All 4/5 Cylinder Turbo Diesel [EP0]=Engines - All 2.5L 4 Cylinder Gas [ER0]=Engines - All 4.0L 6 Cylinder Gas									
1	04641780	1	J, U						STRAP, Tie, Holds Upper Vent Hose
2	J5352955	1	J, U						VENT, AxleUpper
3	HFV00516	1	J, U						HOSE, Fuel And Vapor, 25 Foot Roll 5/16", Axle Vent
4	06502081	1	J, U						CLAMP, Oil Cooler LineLower
5									VENT, Axle
	83504653	1	U						Lower
		1	J						Lower
6									PIN, Cotter, M4x40.00
	11010069	6	U						
		6	J						
7									RING, Ball Joint
	83500203	2	U						
		2	J						
8	J0274428	1							NUT, Hex Slotted
9									KNUCKLE, Front
	52067576	1	U						Right
		1	J						Right
	52067577	1	U						Left
		1	J						Left
10									NUT
	J8123318	2	U						
		2	J						
11									BALL JOINT KIT, Knuckle
	83500202	2	U						
		2	J						
12									BOLT, Differential Cover
	02954031	10	U						
		10	J						
13	J4004751	1	J			EP0, ER0			PLUG, Differential Cover

CHEROKEE (XJ)

SERIES	LINE	BODY	ENGINE	TRANSMISSION
L = LOWLINE	T = JEEP - 2WD B = JEEP - 2WD (RHD) J = JEEP - 4WD U = JEEP - 4WD (RHD)	72 = SPORT UTILITY 2-DR 74 = SPORT UTILITY 4-DR	ENC = 2.5L 4 Cyl Turbo Diesel Engine EPB = 2.5L 4 Cylinder Engine EPE = Engine - 2.5L Power Tech I-4 Cyl. ERH = 4.0L Power Tech I-6 Engine	DDQ = 5-Speed Manual Transmission DGS = 4-Speed Automatic AW4 Transmission DGO = ALL AUTOMATIC TRANSMISSIONS DBB = ALL MANUAL TRANSMISSIONS

Housing,Front Axle,4 Wheel Drive
Figure 2-320

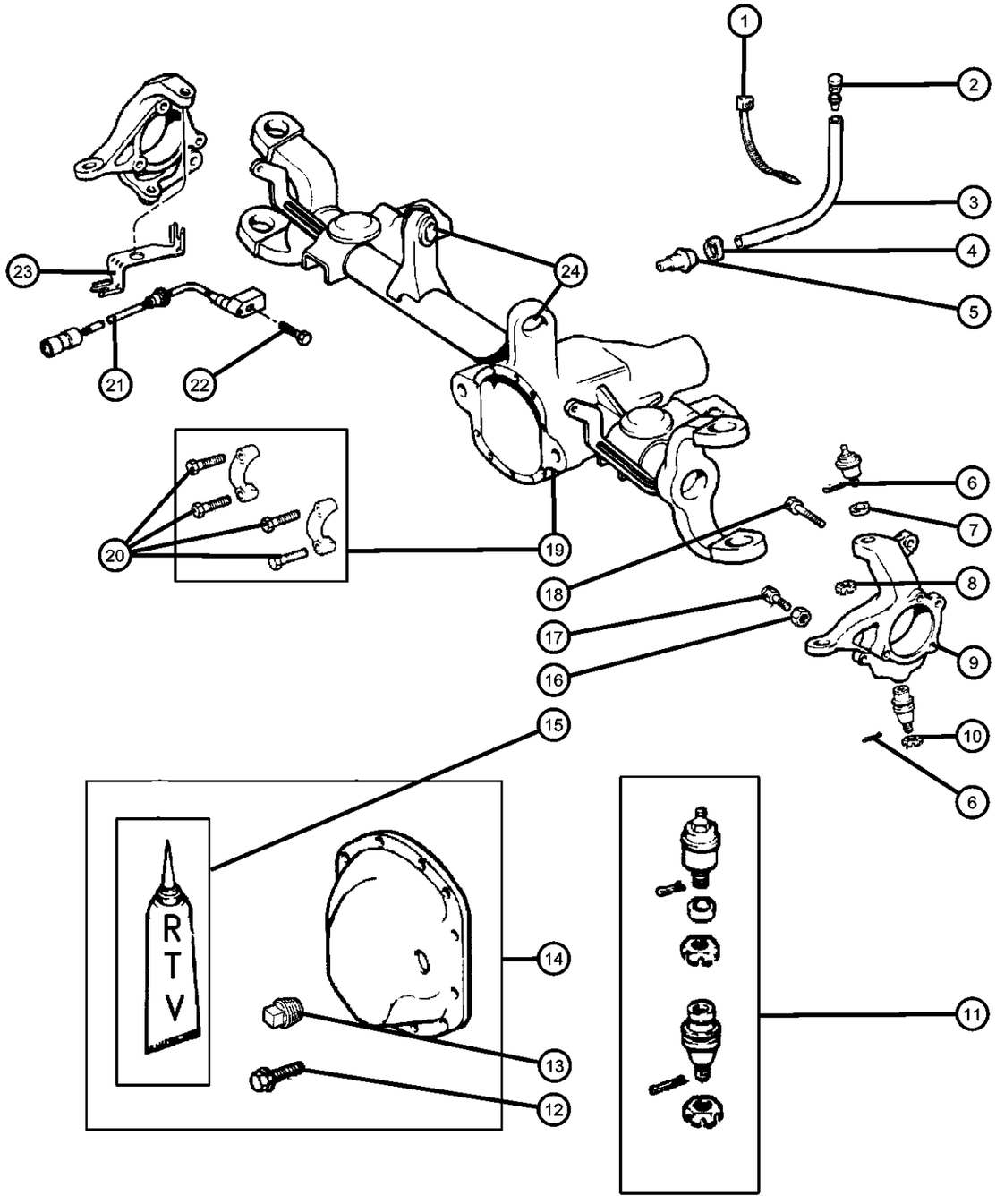

ITEM	PART NUMBER	QTY	LINE	SERIES	BODY	ENGINE	TRANS	TRIM	DESCRIPTION
14									COVER, Differential
	05252583	1	U			ENC			
		1	J						
15	04318025	1	J, U			ER0			SEALANT, RTV
16									NUT, Steering Knuckle
	S0114494	2	U			ENC			Stop
		2	J						Stop
17									BOLT, Steering Knuckle Stop
	01791701	2	U			ENC			
		2	J						
18									BOLT
	34201535	6	U						Knuckle to Hub and Bearing, Mounting
		6	J						Knuckle to Hub and Bearing, Mounting
19									HOUSING, Front Axle
	04773429	1	J						With Control Arm Bushings
	04773458	1	U						With Control Arm Bushings
	04778905	1	J			ENC			With Control Arm Bushings
	04797774	1	U			ENC			With Control Arm Bushings
20									BOLT, Differential
	05003648AA	4	J						
		4	U			ENC			
21									SENSOR, Anti-Lock Brakes
	56005217	2	U			ENC			
		2	J						
22									BOLT
	83504920	2	U			ENC			ABS Sensor, Mounting
		2	J						ABS Sensor, Mounting
23									BRACKET, Brake Sensor
	56026766	1	U			ENC			ABS, Right
		1	J						ABS, Right
	56026767	1	J						ABS, Left
		1	U			ENC			ABS, Left

CHEROKEE (XJ)

SERIES	LINE	BODY	ENGINE	TRANSMISSION
L = LOWLINE	T = JEEP - 2WD B = JEEP - 2WD (RHD) J = JEEP - 4WD U = JEEP - 4WD (RHD)	72 = SPORT UTILITY 2-DR 74 = SPORT UTILITY 4-DR	ENC = 2.5L 4 Cyl Turbo Diesel Engine EPB = 2.5L 4 Cylinder Engine EPE = Engine - 2.5L Power Tech I-4 Cyl. ERH = 4.0L Power Tech I-6 Engine	DDQ = 5-Speed Manual Transmission DGS = 4-Speed Automatic AW4 Transmission DGO = ALL AUTOMATIC TRANSMISSIONS DBB = ALL MANUAL TRANSMISSIONS

Housing,Front Axle,4 Wheel Drive
Figure 2-320

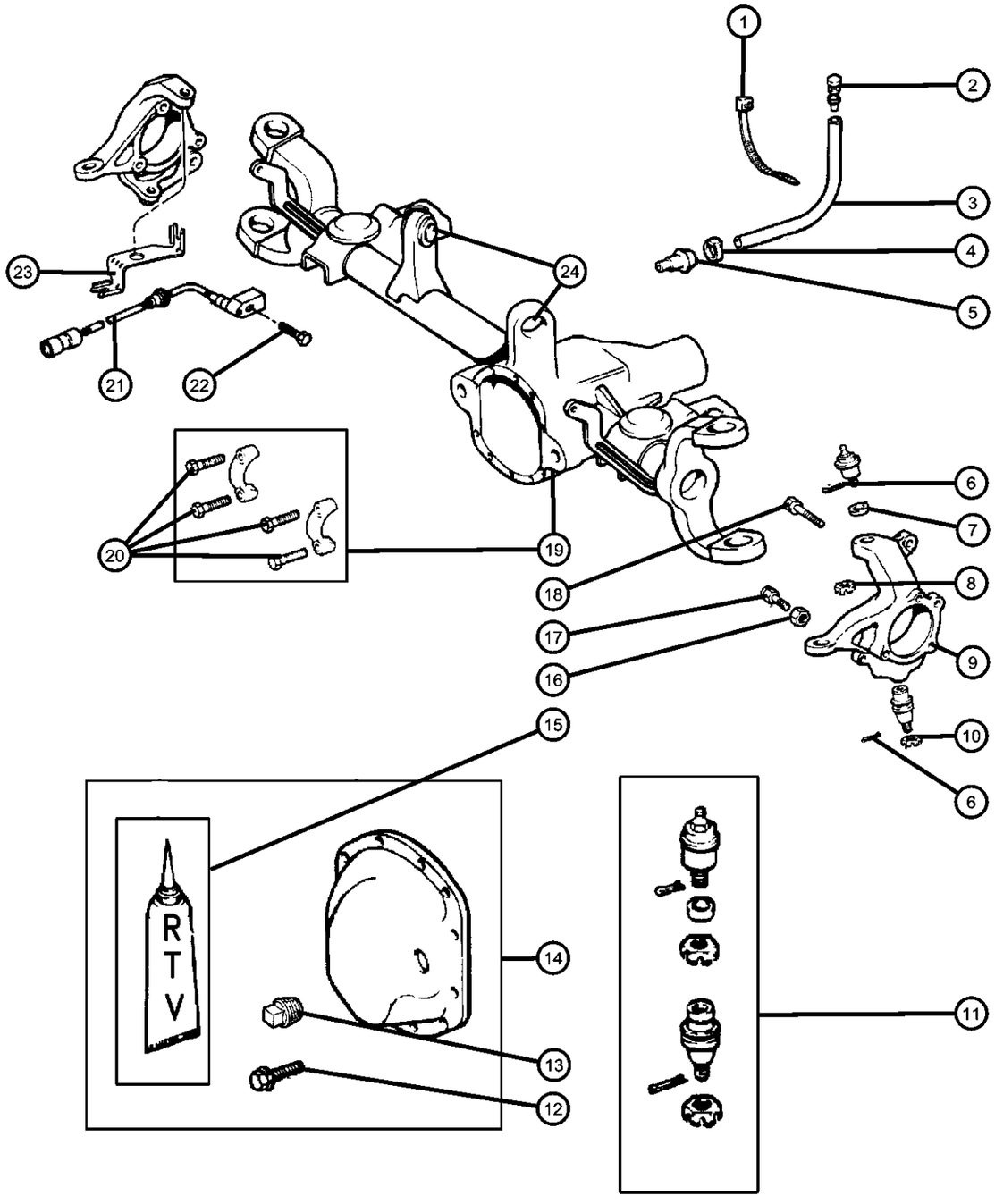

ITEM	PART NUMBER	QTY	LINE	SERIES	BODY	ENGINE	TRANS	TRIM	DESCRIPTION
24									BUSHING, Control Arm
	52038025	2	U			ENC			Front, Upper
		2	J						Front, Upper

CHEROKEE (XJ)

SERIES	LINE	BODY	ENGINE	TRANSMISSION
L = LOWLINE	T = JEEP - 2WD B = JEEP - 2WD (RHD) J = JEEP - 4WD U = JEEP - 4WD (RHD)	72 = SPORT UTILITY 2-DR 74 = SPORT UTILITY 4-DR	ENC = 2.5L 4 Cyl Turbo Diesel Engine EPB = 2.5L 4 Cylinder Engine EPE = Engine - 2.5L Power Tech I-4 Cyl. ERH = 4.0L Power Tech I-6 Engine	DDQ = 5-Speed Manual Transmission DGS = 4-Speed Automatic AW4 Transmission DGO = ALL AUTOMATIC TRANSMISSIONS DBB = ALL MANUAL TRANSMISSIONS

Axle Assembly,Front,4 Wheel Drive
Figure 2-410

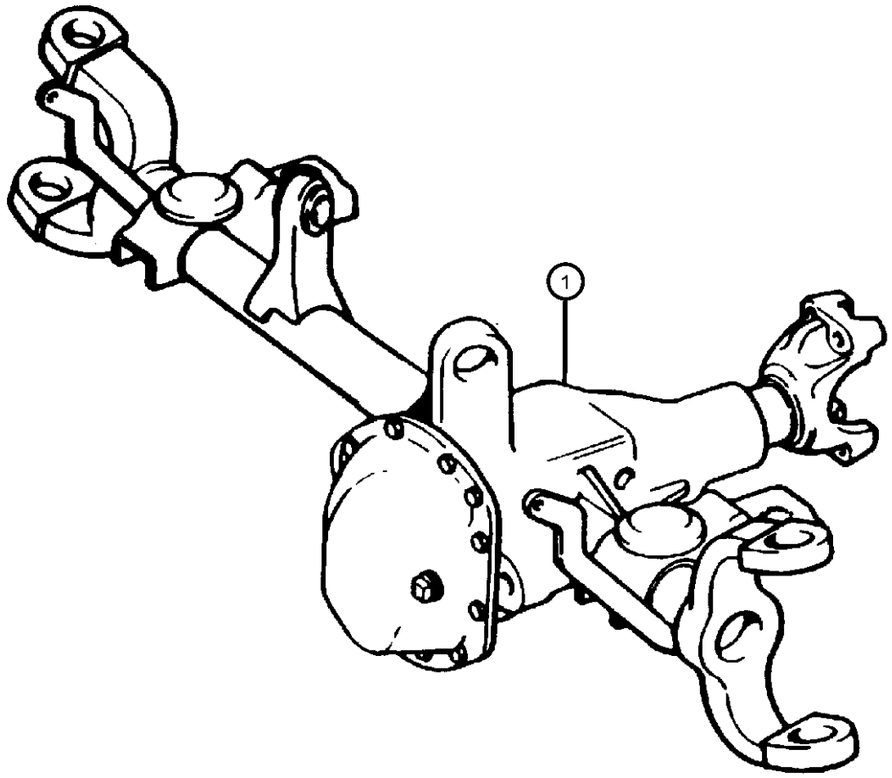

ITEM	PART NUMBER	QTY	LINE	SERIES	BODY	ENGINE	TRANS	TRIM	DESCRIPTION

Note: Sales Codes;
[DMD]=AXLE RATIO - 3.55
[DME]=Axle Ratio - 3.73
[DMF]=Axle Ratio - 4.10
[DMM]=Axle Ratio - 3.07
[ENC]=Engine - 2.5L 4 Cylinder Turbo Diesel
[EN0]=Engines - All 4/5 Cylinder Turbo Diesel
[EP0]=Engines - All 2.5L 4 Cylinder Gas
[ER0]=Engines - All 4.0L 6 Cylinder Gas

1									AXLE, Service Front
	04773428	1	J			EP0, ER0			[DMD] Tag #52069194,52069197
	04773453	1	J						[DMM] Tag #52069193,52069198
	04773454	1	J						[DMF] Tag,# 52069195
	04773457	1	U						[DMD] Tag,# 52069199,52069200
	04778909	1	J			ENC			[DME] Tag# 52068737, 52068738
	04797780	1	U			ENC			[DME] Tag# 5209300,5209301
	04798029	1	U						[DMF] Tag,# 52069201

CHEROKEE (XJ)

SERIES	LINE	BODY	ENGINE	TRANSMISSION
L = LOWLINE	T = JEEP - 2WD B = JEEP - 2WD (RHD) J = JEEP - 4WD U = JEEP - 4WD (RHD)	72 = SPORT UTILITY 2-DR 74 = SPORT UTILITY 4-DR	ENC = 2.5L 4 Cyl Turbo Diesel Engine EPB = 2.5L 4 Cylinder Engine EPE = Engine - 2.5L Power Tech I-4 Cyl. ERH = 4.0L Power Tech I-6 Engine	DDQ = 5-Speed Manual Transmission DGS = 4-Speed Automatic AW4 Transmission DGO = ALL AUTOMATIC TRANSMISSIONS DBB = ALL MANUAL TRANSMISSIONS

Differential,Front Axle
Figure 2-610

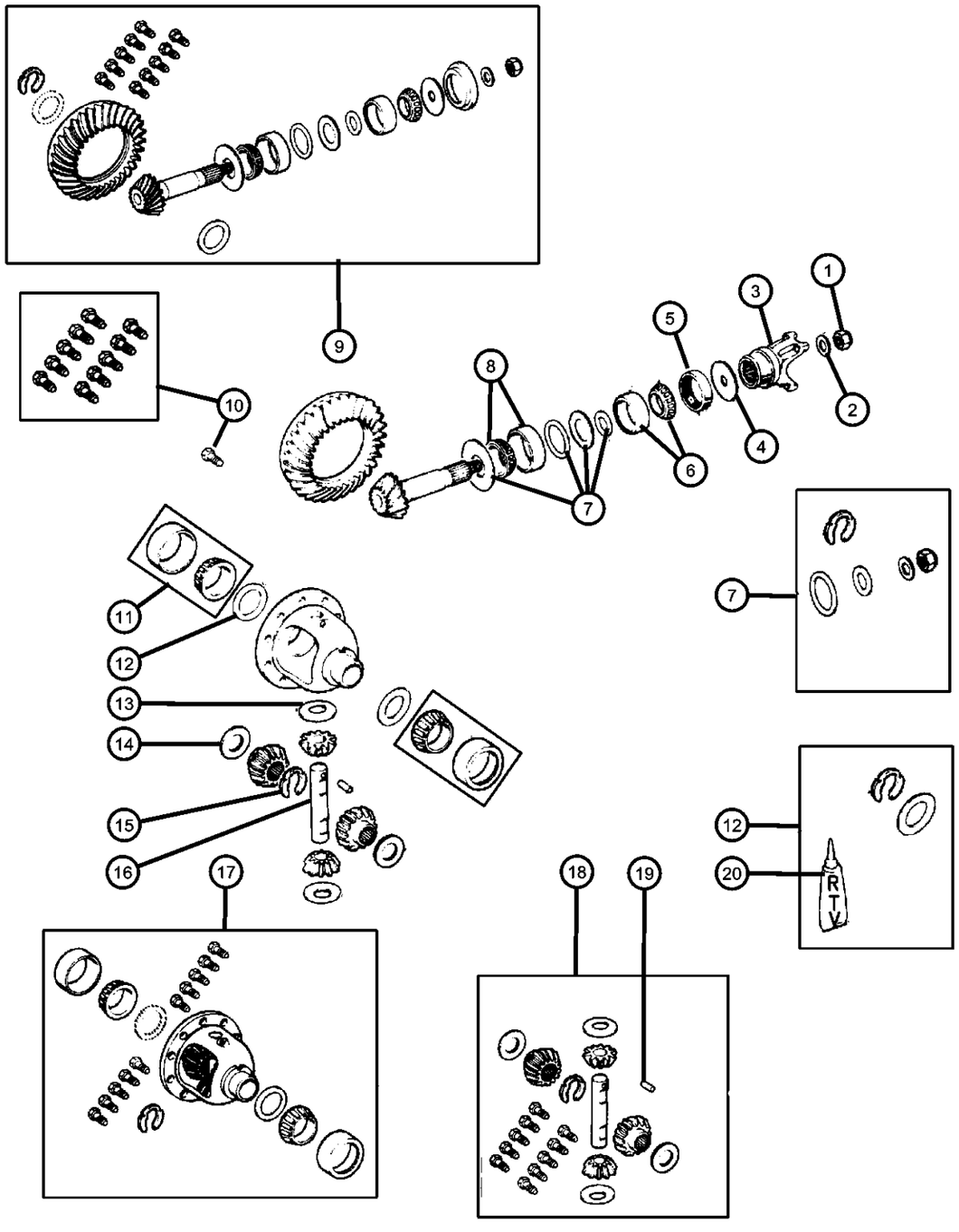

ITEM	PART NUMBER	QTY	LINE	SERIES	BODY	ENGINE	TRANS	TRIM	DESCRIPTION
Note: Sales Codes;									
[DMD]=Axle Ratio - 3.55									
[DME]=Axle Ratio - 3.73									
[DMF]=Axle Ratio - 4.10									
[DMM]=Axle Ratio - 3.07									
[ENC]=Engine - 2.5L 4 Cylinder Turbo Diesel									
[EP0]=Engine - All 2.5L 4 Cylinder gas									
[ER0]=Engines - All 4.0L 6 Cylinder Gas									
1									NUT, Pinion Yoke
	01791575	1	U						
		1	J						
2									WASHER, Pinion Yoke
	01791576	1	U						
		1	J						
3									YOKE, Axle
	83503388	1	U						
		1	J						
4									SLINGER, Drive Pinion
	04031974	1	U						
		1	J						
5									SEAL, Drive Pinion
	04746772	1	U						
		1	J						
6									BEARING, Drive Pinion
	J8124052	1	U						Bearing and Cup, Front
		1	J						Bearing and Cup, Front
7									SHIM KIT, Pinion Shaft
	83500192	1	U						
		1	J						
8									BEARING, Drive Pinion
	J8126499	1	U						Bearing and Cup, Rear
		1	J						Bearing and Cup, Rear
9									GEAR KIT, Ring And Pinion
	04746074	1	J			ENC			[DME]
		1	U			ENC			[DME]

CHEROKEE (XJ)

SERIES	LINE	BODY	ENGINE	TRANSMISSION
L = LOWLINE	T = JEEP - 2WD B = JEEP - 2WD (RHD) J = JEEP - 4WD U = JEEP - 4WD (RHD)	72 = SPORT UTILITY 2-DR 74 = SPORT UTILITY 4-DR	ENC = 2.5L 4 Cyl Turbo Diesel Engine EPB = 2.5L 4 Cylinder Engine EPE = Engine - 2.5L Power Tech I-4 Cyl. ERH = 4.0L Power Tech I-6 Engine	DDQ = 5-Speed Manual Transmission DGS = 4-Speed Automatic AW4 Transmission DGO = ALL AUTOMATIC TRANSMISSIONS DBB = ALL MANUAL TRANSMISSIONS

Differential,Front Axle
Figure 2-610

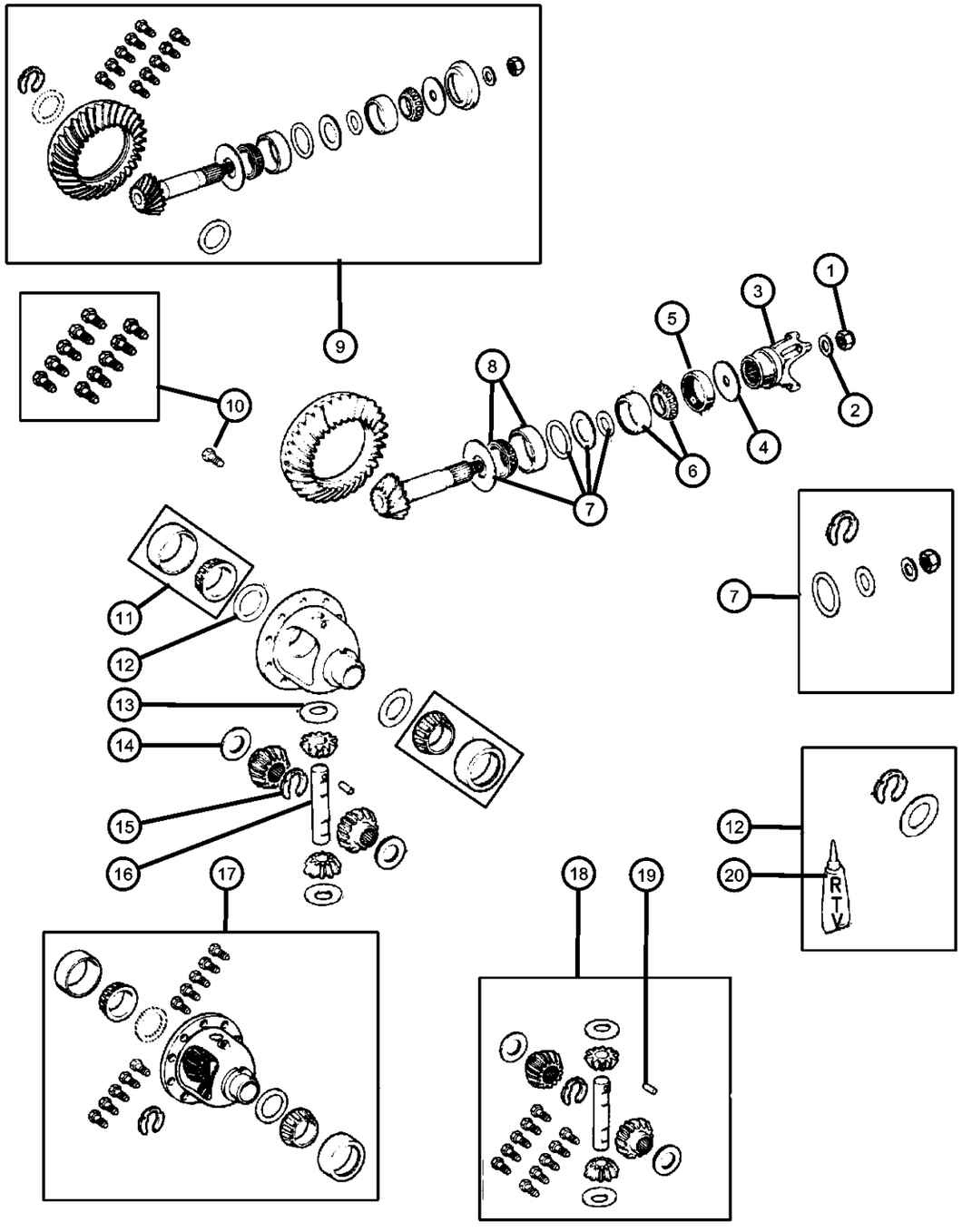

ITEM	PART NUMBER	QTY	LINE	SERIES	BODY	ENGINE	TRANS	TRIM	DESCRIPTION
	83500187	1	J						[DMM]
	83502353	1	U						[DMF]
		1	J						[DMF]
	83505480	1	U						[DMD]
		1	J			EP0, ER0			[DMD]
10									SCREW, Drive Gear
	05252503	10	U						
		10	J						
11									BEARING, Differential
	J8126500	1	U						Consists of 2 Bearings and 2 Cups
		1	J						Consists of 2 Bearings and 2 Cups
12									SHIM KIT, Differential
	83500191	1	U						
		1	J						
13									WASHER, Pinion Gear
	J8120831	2	U						Thrust
		2	J						Thrust
14									WASHER, Side Gear
	J8133724	2	U						Thrust
		2	J						Thrust
15									SNAP RING, Front Axle Shaft
	04137739	2	U						
		2	J						
16									SHAFT, Differential
	05003840AA	1	U						Pinion
		1	J						Pinion
17									CASE, Differential
	05252582	1	U						[DMD] With Internal Parts
		1	J						[DMM,DMD] With Internal Parts
	05252590	1	U						[DME,DMF] With Internal Parts
		1	J						[DME,DMF] With Internal Parts
18									GEAR KIT, Center Differential

CHEROKEE (XJ)

SERIES	LINE	BODY	ENGINE	TRANSMISSION
L = LOWLINE	T = JEEP - 2WD B = JEEP - 2WD (RHD) J = JEEP - 4WD U = JEEP - 4WD (RHD)	72 = SPORT UTILITY 2-DR 74 = SPORT UTILITY 4-DR	ENC = 2.5L 4 Cyl Turbo Diesel Engine EPB = 2.5L 4 Cylinder Engine EPE = Engine - 2.5L Power Tech I-4 Cyl. ERH = 4.0L Power Tech I-6 Engine	DDQ = 5-Speed Manual Transmission DGS = 4-Speed Automatic AW4 Transmission DGO = ALL AUTOMATIC TRANSMISSIONS DBB = ALL MANUAL TRANSMISSIONS

Differential,Front Axle
Figure 2-610

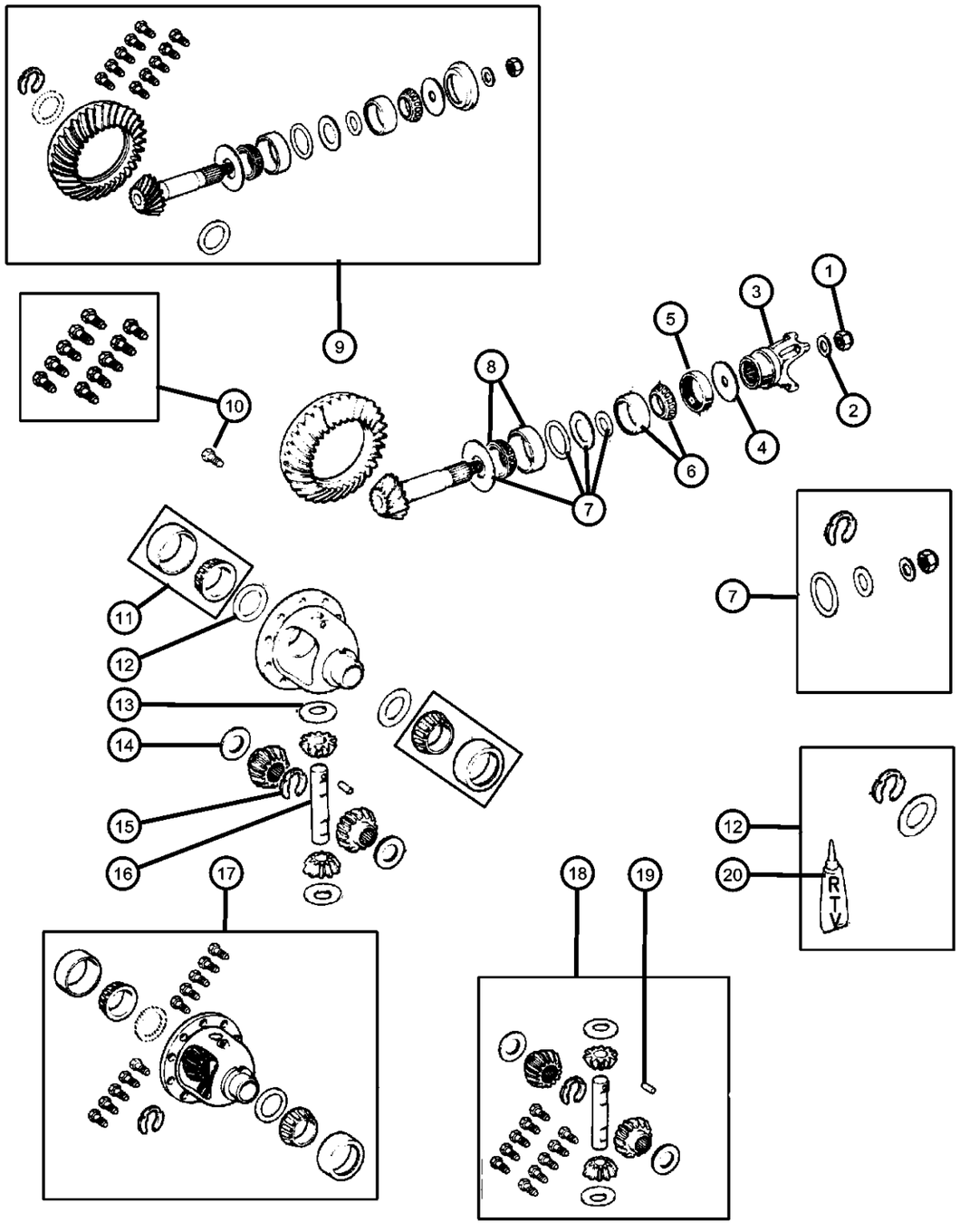

ITEM	PART NUMBER	QTY	LINE	SERIES	BODY	ENGINE	TRANS	TRIM	DESCRIPTION
	05252591	1	J						
		1	U						
19									PIN, Differential Shaft
	01791563	1	U						
		1	J						
20									SEALANT, RTV
	05010884AA	1	J						
		1	U						

CHEROKEE (XJ)

SERIES	LINE	BODY	ENGINE	TRANSMISSION
L = LOWLINE	T = JEEP - 2WD B = JEEP - 2WD (RHD) J = JEEP - 4WD U = JEEP - 4WD (RHD)	72 = SPORT UTILITY 2-DR 74 = SPORT UTILITY 4-DR	ENC = 2.5L 4 Cyl Turbo Diesel Engine EPB = 2.5L 4 Cylinder Engine EPE = Engine - 2.5L Power Tech I-4 Cyl. ERH = 4.0L Power Tech I-6 Engine	DDQ = 5-Speed Manual Transmission DGS = 4-Speed Automatic AW4 Transmission DGO = ALL AUTOMATIC TRANSMISSIONS DBB = ALL MANUAL TRANSMISSIONS

Group - 3

Rear Axle

003-100 Rear Axle	003-200 Differential and Housing	003-300 Rear Axle Vent	003-400 Rear Axle Shafts
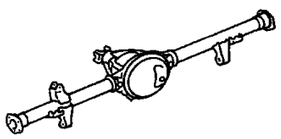	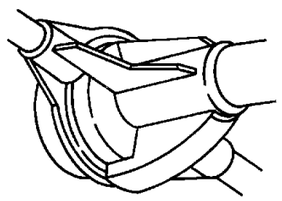	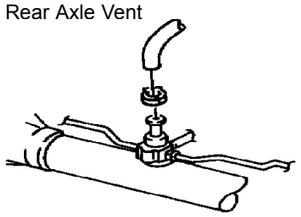	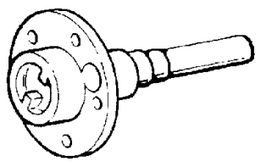

Group - 3 Rear Axle

Illustration Title — Group-Fig. No.

Rear Axle

Axle Assembly,Rear,Corporate Model 8.25 [DRA] ..... Fig. 3 - 110
Axle Assembly,Rear,Dana Model 35 [DRJ,DRM] ..... Fig. 3 - 120

Differential and Housing

Differential and Housing,Chrysler Model 8.25 [DRA] ..... Fig. 3 - 210
Housing,Rear Axle,Dana 35 [DRJ,DRM] ..... Fig. 3 - 220
Differential,without Trac-Lock,Dana 35 [DRJ,DRM] ..... Fig. 3 - 230
Differential,with Trac-Lok,Dana 35 [DRJ,DRM] ..... Fig. 3 - 240

Rear Axle Vent

Vent,Axle ..... Fig. 3 - 310

Rear Axle Shafts

Shaft, Rear Axle Dana Model 35 [DRJ,DRM] ..... Fig. 3 - 410

Axle Assembly,Rear,Corporate Model 8.25 [DRA]
Figure 3-110

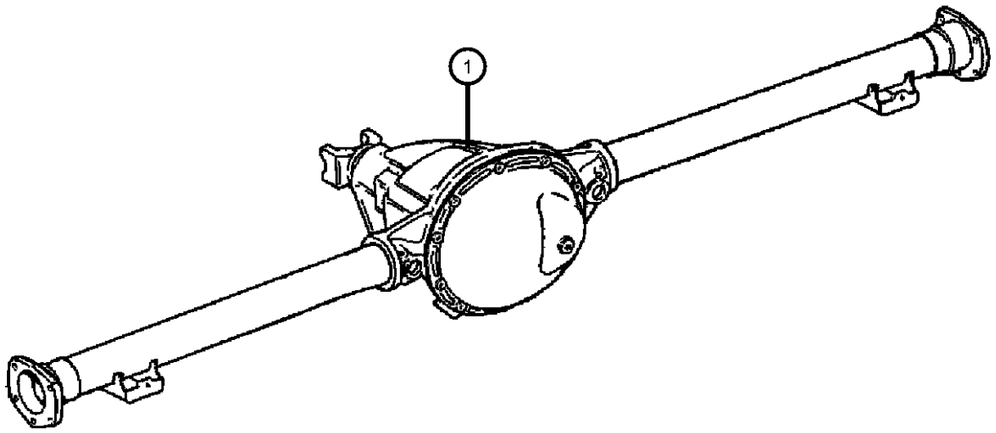

ITEM	PART NUMBER	QTY	LINE	SERIES	BODY	ENGINE	TRANS	TRIM	DESCRIPTION
Note: Sales Codes; [DMD]=Axle Ratio - 3.55 [DMF]=Axle Ratio - 4.10 [DMM]=Axle Ratio - 3.07 [DSA]=Axle - Anti-Spin Differential									
1									AXLE, Service Rear
	04886133AA	1							[DMD,BGA,DSA] Tag# 52098717, 52098717AC
	04886138AA	1							[DMD,BGA] Tag# 52098716, 52098716AC
	04886139AA	1							[DMM,BGA] Tag# 52098715, 52098715AB
	04886140AA	1							[DMM,BGA,DSA] Tag# 52099380, 52099380AB
	04886145AA	1							[DMF,BGA,DSA] Tag# 52099381,52098381AB
	04886148AA	1							[DMF,BGA] Tag# 52098718, 52098718AB

CHEROKEE (XJ)

SERIES	LINE	BODY	ENGINE	TRANSMISSION
L = LOWLINE	T = JEEP - 2WD B = JEEP - 2WD (RHD) J = JEEP - 4WD U = JEEP - 4WD (RHD)	72 = SPORT UTILITY 2-DR 74 = SPORT UTILITY 4-DR	ENC = 2.5L 4 Cyl Turbo Diesel Engine EPB = 2.5L 4 Cylinder Engine EPE = Engine - 2.5L Power Tech I-4 Cyl. ERH = 4.0L Power Tech I-6 Engine	DDQ = 5-Speed Manual Transmission DGS = 4-Speed Automatic AW4 Transmission DGO = ALL AUTOMATIC TRANSMISSIONS DBB = ALL MANUAL TRANSMISSIONS

Axle Assembly,Rear,Dana Model 35 [DRJ,DRM]
Figure 3-120

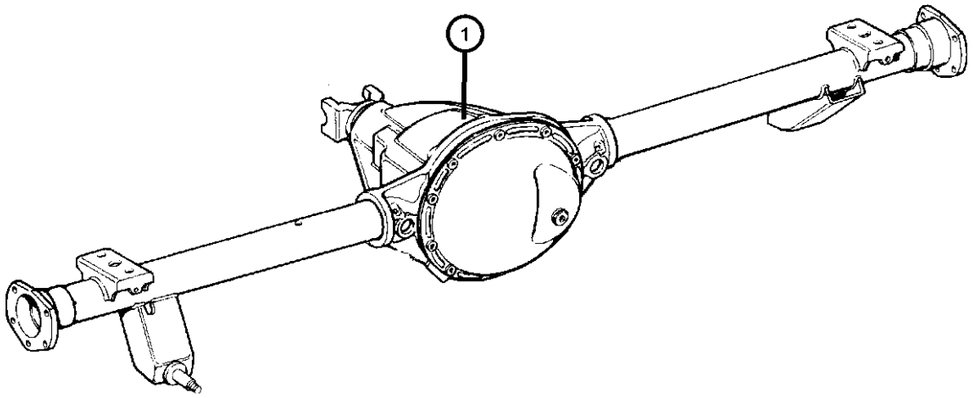

ITEM	PART NUMBER	QTY	LINE	SERIES	BODY	ENGINE	TRANS	TRIM	DESCRIPTION

Note: Sales Codes;
[AHB]=Police Group
[BGA]= Brakes - Power Front Disc/Rear Drum
[BGK]= Brakes - 4-Wheel Anti-Lock
[DMD]=Axle Ratio - 3.55
[DME]=Axle Ratio - 3.73
[DMM]=Axle Ratio - 3.07
[DRJ]=Axle - Rear,Dana M35/194MM
[DRM]= Axle - Rear,Dana 35C/194MM
[DSA]=Axle - Anti-Spin Differential

1			AXLE, Service Rear
	04797553	1	[DRM,DMD,BGK] Tag# 52099473, 52099473AB
	04797571	1	[DRM,DMD,BGK,DSA,AHB] Tag# 52099458,52099458AB
		1	[DRM,DMD,BGK,DSA] Tag# 52099457,52099457AB
	04798093	1	[DRM,DME,BGA,DSA] Tag# 52099468,52099468AB
	04856491	1	[DRM,DME,BGA] Tag# 52099467,52099467AB
	04882527	1	[DRJ,DMM,BGK,DSA] Tag# 52099459,52099459AB
	04882529	1	[DRJ,DMM,BGK] Tag# 52099474, 52099474AB
	04882560	1	[DRM,DME,BGK,DSA] Tag# 52099460,52099460AB

CHEROKEE (XJ)

SERIES	LINE	BODY	ENGINE	TRANSMISSION
L = LOWLINE	T = JEEP - 2WD B = JEEP - 2WD (RHD) J = JEEP - 4WD U = JEEP - 4WD (RHD)	72 = SPORT UTILITY 2-DR 74 = SPORT UTILITY 4-DR	ENC = 2.5L 4 Cyl Turbo Diesel Engine EPB = 2.5L 4 Cylinder Engine EPE = Engine - 2.5L Power Tech I-4 Cyl. ERH = 4.0L Power Tech I-6 Engine	DDQ = 5-Speed Manual Transmission DGS = 4-Speed Automatic AW4 Transmission DGO = ALL AUTOMATIC TRANSMISSIONS DBB = ALL MANUAL TRANSMISSIONS

Differential and Housing,Chrysler Model 8.25 [DRA]
Figure 3-210

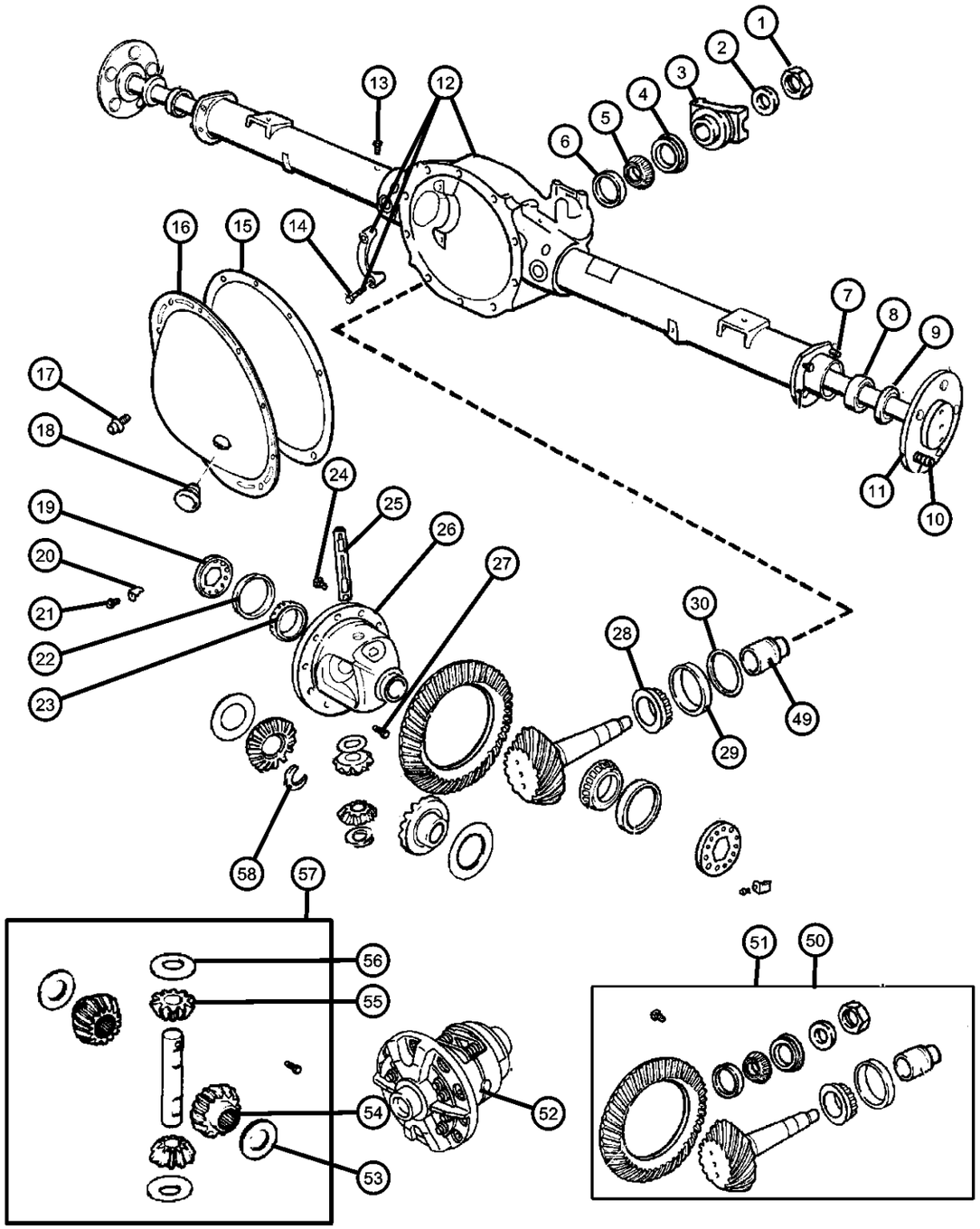

ITEM	PART NUMBER	QTY	LINE	SERIES	BODY	ENGINE	TRANS	TRIM	DESCRIPTION
Note: Sales Codes; [DMM]= Axle Ratio - 3.07 [DMD]=Axle Ratio - 3.55 [DMF]=Axle Ratio - 4.10 [DRA] =Axle - Rear, Corporate 8.25 [DSA] =Axle - Trac-Lok Differential									
1	06028041	1							NUT, Pinion Yoke
2	02070117	1							WASHER, Pinion Yoke
3	52068839	1							YOKE, Axle
4	52067595	1							SEAL, Drive Pinion
5	02070316	1							BEARING, Drive PinionFront
6	02070317	1							CUP, Pinion BearingFront
7	03723668	8							STUD, Axle Housing to Backing Plate, Mounting
8	03507898AB	2							BEARING, Wheel
9	04137426	2							SEAL, Axle Drive Shaft
10	53008135	10							STUD, Hub
11	52098902	2							SHAFT, Axle
12									HOUSING, Axle
	04886134AA	1							[DMM]
	05011249AA	1							[DMD,DMF]
13	52067508	1							BOLT, Axle Vent
14	03432695	4							SCREW, Hex Head, .50-13x2.38, Carrier Bearing Cap, Mounting
15	05010884AA	1	J, U						SEALANT, RTV
16	03723681AC	1							COVER, Differential
17	06033043	10							SCREW AND WASHER, Hex Flange Head, .312-18x.562
18	03723687	1							PLUG, Differential Cover
19	03507876	2							ADJUSTER, Differential Bearing
20	03723859	2							LOCK, Differential Bearing
21	06023092	2							SCREW AND WASHER, Hex Head, .25-20x.50, Differential Bearing Lock
22	03723569	2							CUP, Differential Side
23	01790541	2							BEARING, Differential
24	04443158	1							SCREW PACKAGE, Axle Drive Gear, Ring Gear, Mounting

CHEROKEE (XJ)

SERIES	LINE	BODY	ENGINE	TRANSMISSION
L = LOWLINE	T = JEEP - 2WD B = JEEP - 2WD (RHD) J = JEEP - 4WD U = JEEP - 4WD (RHD)	72 = SPORT UTILITY 2-DR 74 = SPORT UTILITY 4-DR	ENC = 2.5L 4 Cyl Turbo Diesel Engine EPB = 2.5L 4 Cylinder Engine EPE = Engine - 2.5L Power Tech I-4 Cyl. ERH = 4.0L Power Tech I-6 Engine	DDQ = 5-Speed Manual Transmission DGS = 4-Speed Automatic AW4 Transmission DGO = ALL AUTOMATIC TRANSMISSIONS DBB = ALL MANUAL TRANSMISSIONS

Differential and Housing,Chrysler Model 8.25 [DRA]
Figure 3-210

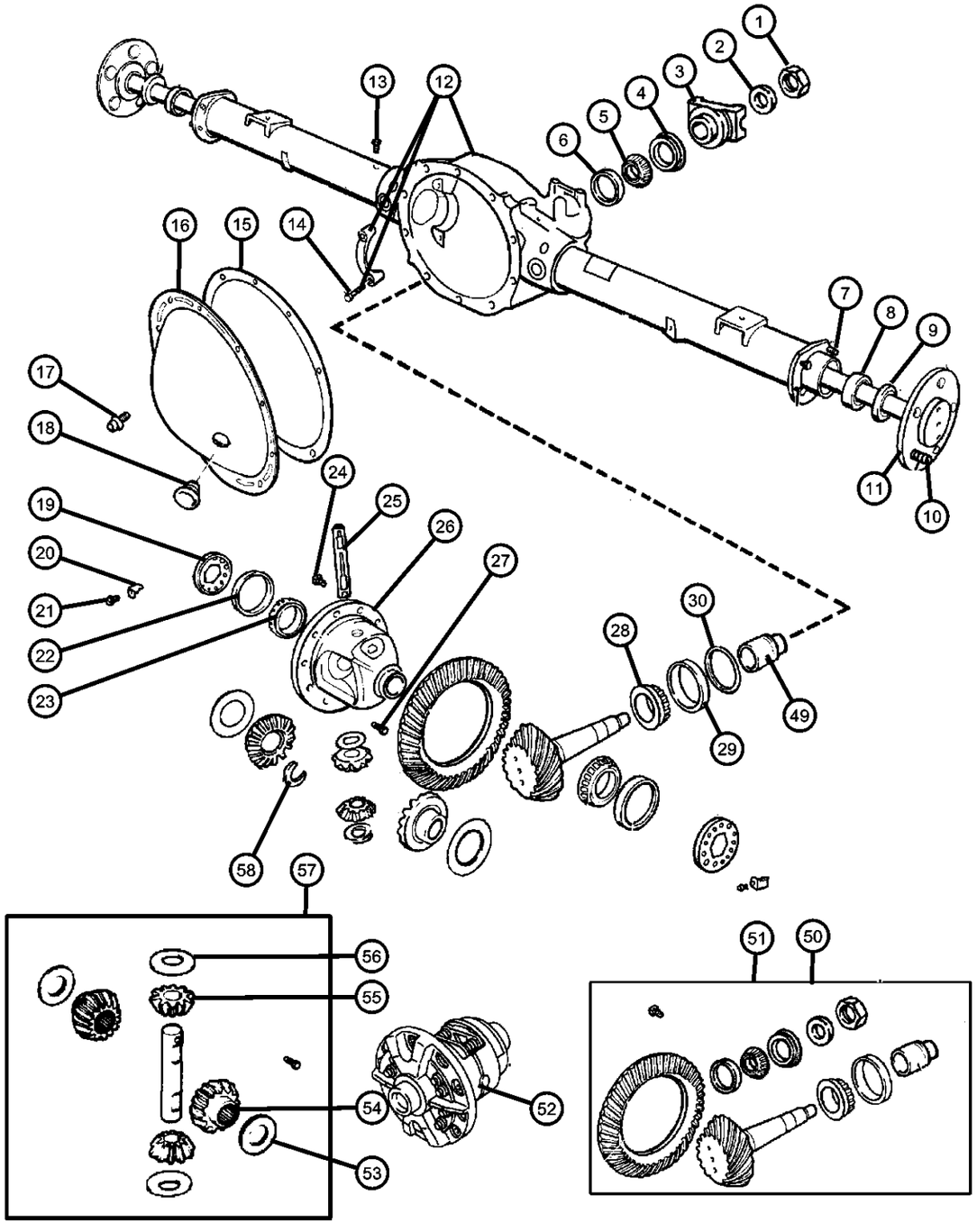

ITEM	PART NUMBER	QTY	LINE	SERIES	BODY	ENGINE	TRANS	TRIM	DESCRIPTION
25	52069657	1							SHAFT, Differential Pinion, Also Serviced In Differential Gear Package, Without [DSA]
26	52098776	1							CASE, Differential, Without [DSA] Without Internal Parts
27	03507724	1							SCREW, Hex Head, .312-18x1.80, Also Serviced in Differential Gear Package
28	02800484	1							BEARING, Drive PinionRear
29	02800485	1							CUP, Pinion BearingRear
30	03723520	AR							SHIM, Drive Pinion Bearing, .020
-31	03723521	1							SHIM, Drive Pinion Bearing, .021
-32	03723522	AR							SHIM, Drive Pinion Bearing, .022
-33	03723523	1							SHIM, Drive Pinion Bearing, .023
-34	03723524	AR							SHIM, Drive Pinion Bearing, .024
-35	03723525	1							SHIM, Drive Pinion Bearing, .025
-36	03723526	AR							SHIM, Drive Pinion Bearing, .026
-37	03723527	AR							SHIM, Drive Pinion Bearing, .027
-38	03723528	AR							SHIM, Drive Pinion Bearing, .028
-39	03723529	AR							SHIM, Drive Pinion Bearing, .029
-40	03723530	AR							SHIM, Drive Pinion Bearing, .030
-41	03723531	AR							SHIM, Drive Pinion Bearing, .031
-42	03723532	AR							SHIM, Drive Pinion Bearing, .032
-43	03723533	1							SHIM, Drive Pinion Bearing, .033
-44	03723534	AR							SHIM, Drive Pinion Bearing, .034
-45	03723535	1							SHIM, Drive Pinion Bearing, .035
-46	03723536	AR							SHIM, Drive Pinion Bearing, .036
-47	03723537	1							SHIM, Drive Pinion Bearing, .037
-48	03723538	AR							SHIM, Drive Pinion Bearing, .038
49	03507575	1							SPACER, Drive Pinion Bearing, Crush
50	04856540AC	1							GEAR KIT, Ring And Pinion, [DMD] Includes Items 1,2,5,6,24,28,29,43
51									GEAR PACKAGE, Ring And Pinion
	04720973	1							[DMF] Includes Items 1,2,5,6,24,28,29,43
	04728707	1							[DMM] Includes Items 1,2,24,43

CHEROKEE (XJ)

SERIES	LINE	BODY	ENGINE	TRANSMISSION
L = LOWLINE	T = JEEP - 2WD B = JEEP - 2WD (RHD) J = JEEP - 4WD U = JEEP - 4WD (RHD)	72 = SPORT UTILITY 2-DR 74 = SPORT UTILITY 4-DR	ENC = 2.5L 4 Cyl Turbo Diesel Engine EPB = 2.5L 4 Cylinder Engine EPE = Engine - 2.5L Power Tech I-4 Cyl. ERH = 4.0L Power Tech I-6 Engine	DDQ = 5-Speed Manual Transmission DGS = 4-Speed Automatic AW4 Transmission DGO = ALL AUTOMATIC TRANSMISSIONS DBB = ALL MANUAL TRANSMISSIONS

AR = use ase required - = Non illustrrated part

Differential and Housing,Chrysler Model 8.25 [DRA]
Figure 3-210

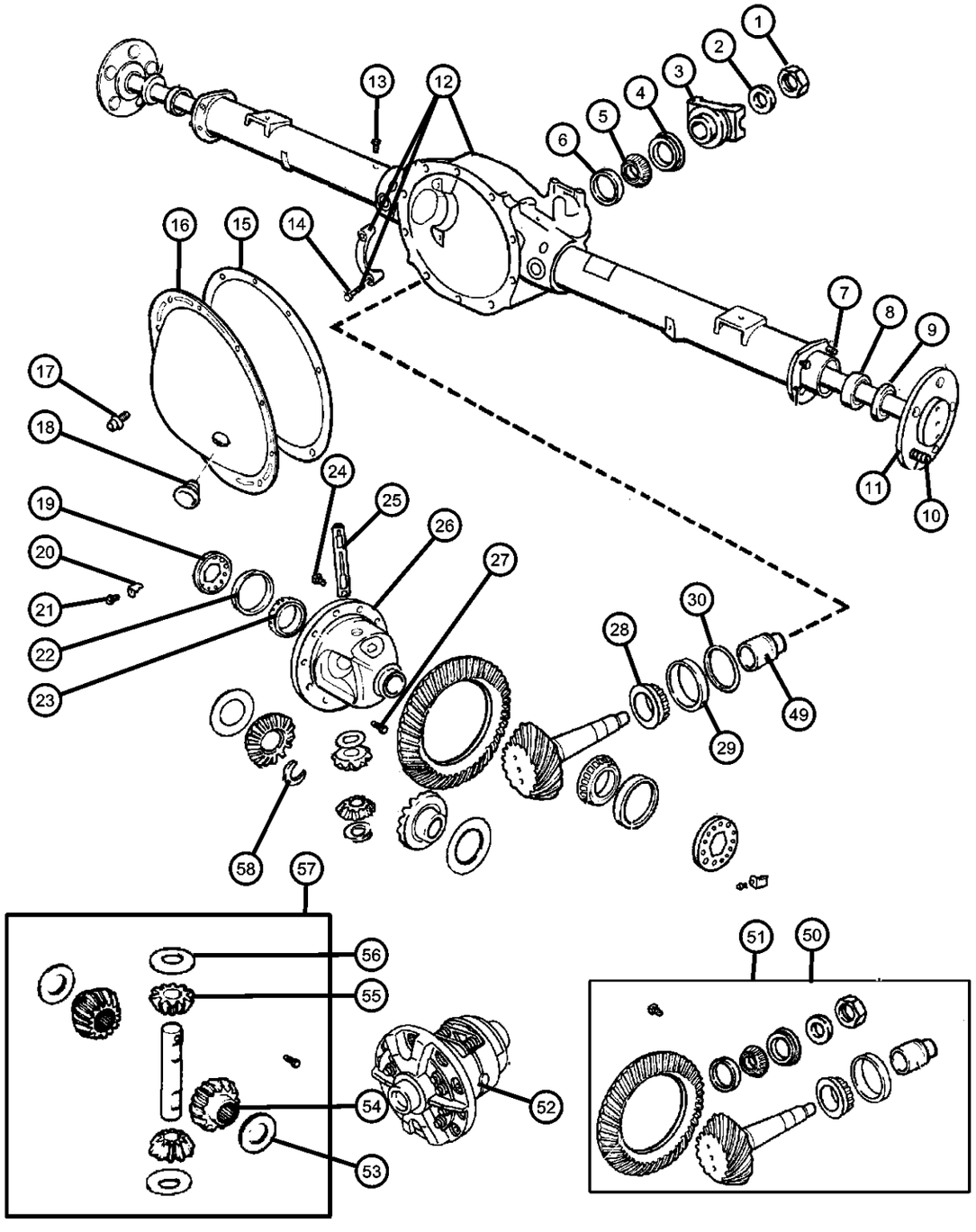

ITEM	PART NUMBER	QTY	LINE	SERIES	BODY	ENGINE	TRANS	TRIM	DESCRIPTION
52	52098778	1							CASE, Differential, With [DSA] With Internal Parts
53	04883085	1							WASHER PACKAGE, Side Gear Thrust, Also Serviced In Differential Gear Package, Without [DSA]
54	52069429	2							GEAR, Differential, Also Serviced In Differential Gear Package, Without [DSA]
55	52069655	2							PINION, Differential, Also Serviced In Differential Gear Package, Without [DSA]
56	02852912	2							WASHER, Pinion Gear, Also Serviced In Differential Gear Package, Without [DSA], Thrust
57	04883087	1							GEAR PACKAGE, Differential, Without [DSA]
58	52069426	2							RETAINER, Axle Shaft

CHEROKEE (XJ)

SERIES	LINE	BODY	ENGINE	TRANSMISSION
L = LOWLINE	T = JEEP - 2WD B = JEEP - 2WD (RHD) J = JEEP - 4WD U = JEEP - 4WD (RHD)	72 = SPORT UTILITY 2-DR 74 = SPORT UTILITY 4-DR	ENC = 2.5L 4 Cyl Turbo Diesel Engine EPB = 2.5L 4 Cylinder Engine EPE = Engine - 2.5L Power Tech I-4 Cyl. ERH = 4.0L Power Tech I-6 Engine	DDQ = 5-Speed Manual Transmission DGS = 4-Speed Automatic AW4 Transmission DGO = ALL AUTOMATIC TRANSMISSIONS DBB = ALL MANUAL TRANSMISSIONS

Housing,Rear Axle,Dana 35 [DRJ,DRM]
Figure 3-220

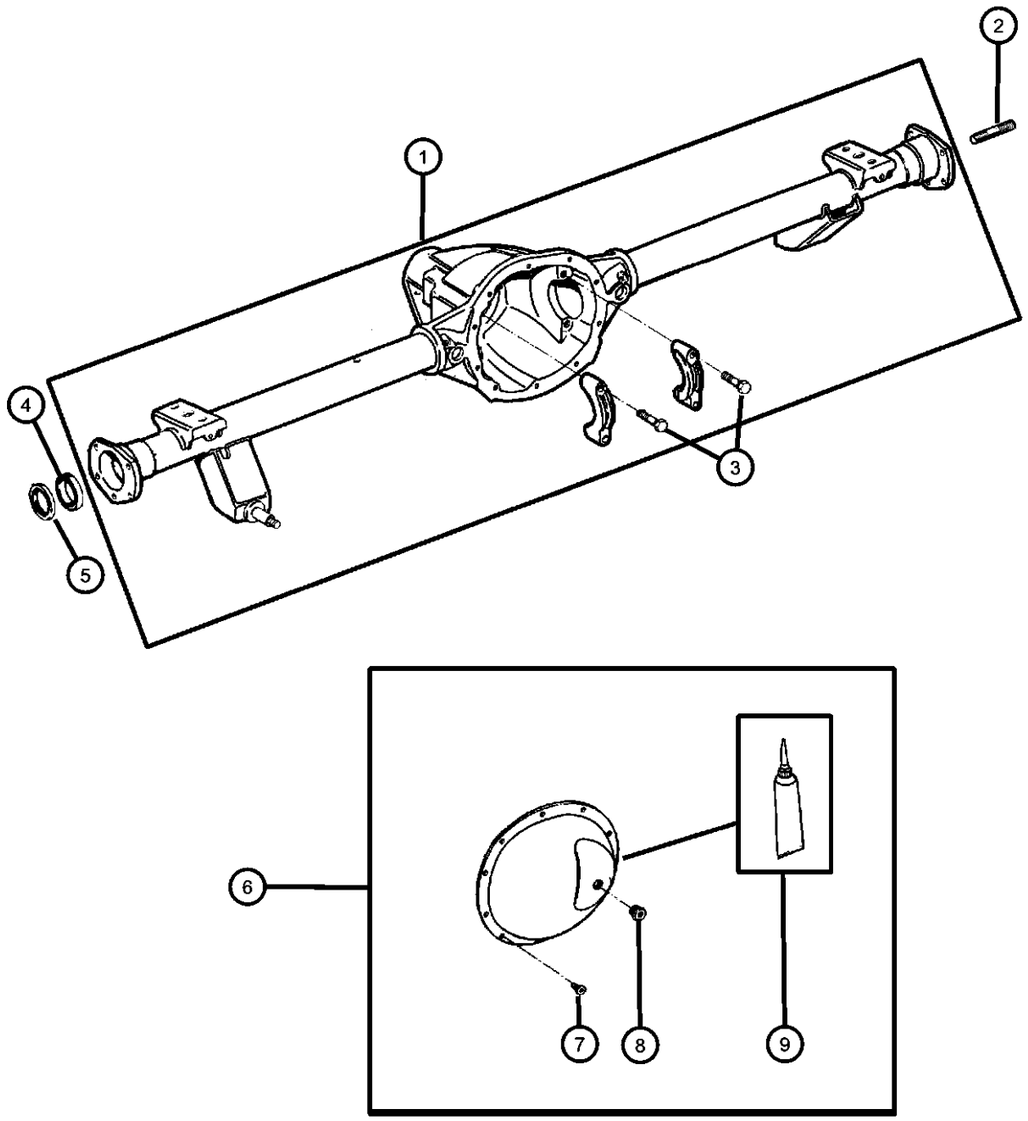

ITEM	PART NUMBER	QTY	LINE	SERIES	BODY	ENGINE	TRANS	TRIM	DESCRIPTION

Note:Sales Codes;
[DMD]=Axle Ratio - 3.55
[DME]=Axle Ratio - 3.73
[DMM]= Axle Ratio - 3.07
[DRJ]=Axle - Rear,Dana M35/194MM
[DRM]=Axle - Rear,Dana 35C/194MM

1			HOUSING, Rear Axle
	04636168	1	[DMD]
	04798092	1	[DMM,DME]
2	J0994313	8	STUD, Axle Housing to Backing Plate, Mounting
3	04897482AB	4	BOLT, Differential, Carrier Cap, Mounting
4	J8134586	2	BEARING, Axle Shaft
5	04856336	2	SEAL, Axle Drive Shaft
6	05252493	1	COVER, Differential
7	J4006708	10	SCREW, Pan Head, .312-18x.56, Differential Cover, Mounting
8	05252504	1	PLUG, Differential Cover
9	05010884AA	1	SEALANT, RTV

CHEROKEE (XJ)

SERIES	LINE	BODY	ENGINE	TRANSMISSION
L = LOWLINE	T = JEEP - 2WD B = JEEP - 2WD (RHD) J = JEEP - 4WD U = JEEP - 4WD (RHD)	72 = SPORT UTILITY 2-DR 74 = SPORT UTILITY 4-DR	ENC = 2.5L 4 Cyl Turbo Diesel Engine EPB = 2.5L 4 Cylinder Engine EPE = Engine - 2.5L Power Tech I-4 Cyl. ERH = 4.0L Power Tech I-6 Engine	DDQ = 5-Speed Manual Transmission DGS = 4-Speed Automatic AW4 Transmission DGO = ALL AUTOMATIC TRANSMISSIONS DBB = ALL MANUAL TRANSMISSIONS

Differential,without Trac-Lock,Dana 35 [DRJ,DRM]
Figure 3-230

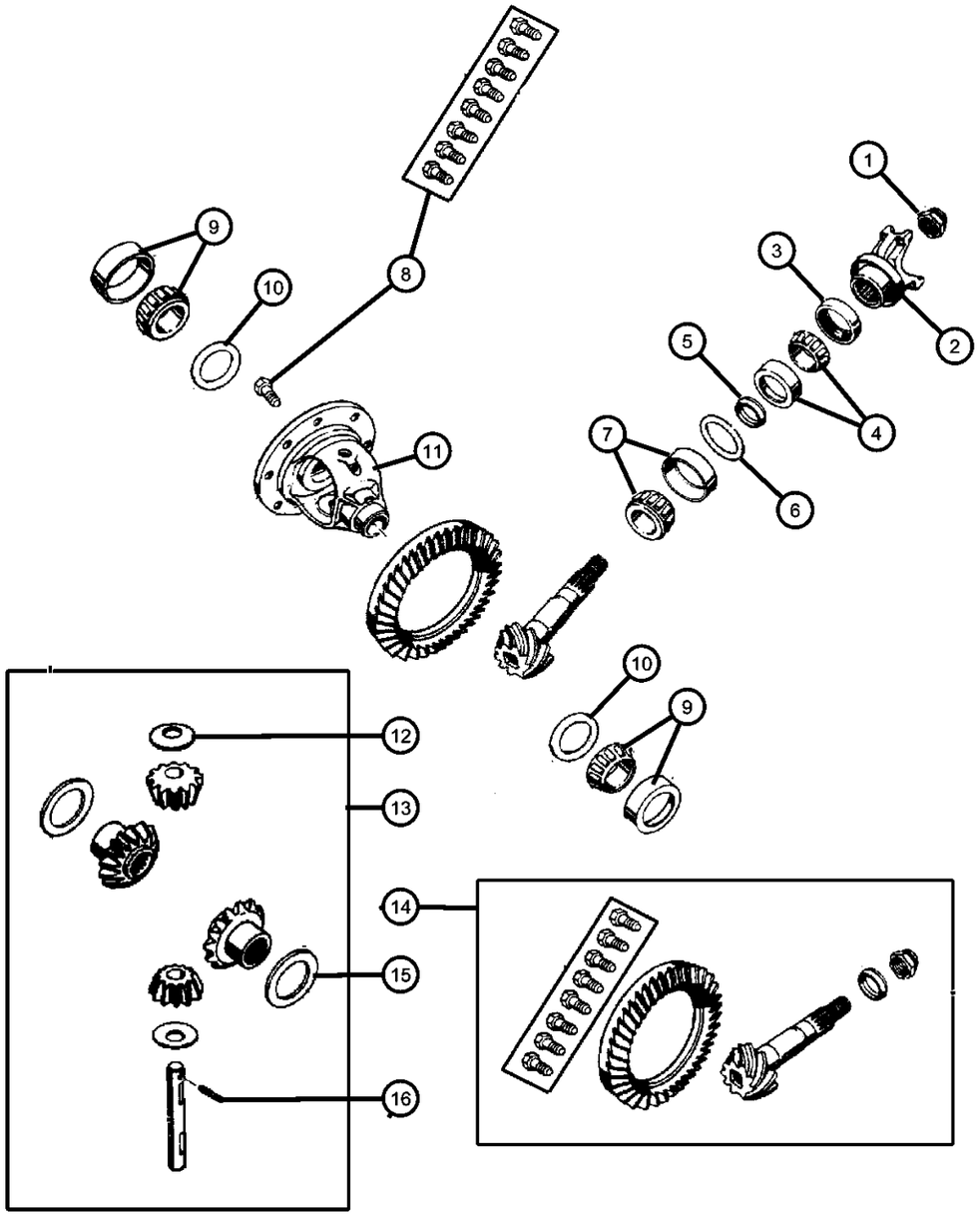

ITEM	PART NUMBER	QTY	LINE	SERIES	BODY	ENGINE	TRANS	TRIM	DESCRIPTION
Note:Sales Codes;									
[DMD]=Axle Ratio - 3.55									
[DME]=Axle Ratio - 3.73									
[DMM]=Axle Ratio - 3.07									
[DRJ]=Axle - Rear,Dana M35/194MM									
[DRM]=Axle - Rear,Dana 35C/194MM									
1	04720895	1							NUT, Pinion Yoke
2									YOKE, Axle
	04746835	1							[DME,DMM]
	04797552	1							[DMD]
3	83504946	1							SEAL, Drive Pinion
4	05252508	1							BEARING, Drive Pinion, Bearing and Cup, Front
5	J3175779	1							SPACER, Drive Pinion Bearing, Crush
6	04720922	1							SHIM KIT, Pinion Shaft
7	05252507	1							BEARING, Drive Pinion, Bearing and Cup, Rear
8	04720891	1							BOLT KIT, Ring Gear, Mounting
9	J8126500	1							BEARING, Differential, Consists of 2 Bearing and 2 Cups
10	83503004	1							SHIM KIT, Differential
11									CASE, Differential
	04740833	1							[DMM]
	04740834	1							[DMD,DME]
12	J8120831	2							WASHER, Pinion GearThrust
13	04740670	1							GEAR KIT, Center Differential
14									GEAR KIT, Ring And Pinion
	04761676	1							[DMD]
	04761678	1							[DME]
	83505472	1							[DMM]
15	J8120832	2							WASHER, Side GearThrust
16	05252502	1							PIN, Differential Shaft

CHEROKEE (XJ)

SERIES	LINE	BODY	ENGINE	TRANSMISSION
L = LOWLINE	T = JEEP - 2WD B = JEEP - 2WD (RHD) J = JEEP - 4WD U = JEEP - 4WD (RHD)	72 = SPORT UTILITY 2-DR 74 = SPORT UTILITY 4-DR	ENC = 2.5L 4 Cyl Turbo Diesel Engine EPB = 2.5L 4 Cylinder Engine EPE = Engine - 2.5L Power Tech I-4 Cyl. ERH = 4.0L Power Tech I-6 Engine	DDQ = 5-Speed Manual Transmission DGS = 4-Speed Automatic AW4 Transmission DGO = ALL AUTOMATIC TRANSMISSIONS DBB = ALL MANUAL TRANSMISSIONS

Differential,with Trac-Lok,Dana 35 [DRJ,DRM]
Figure 3-240

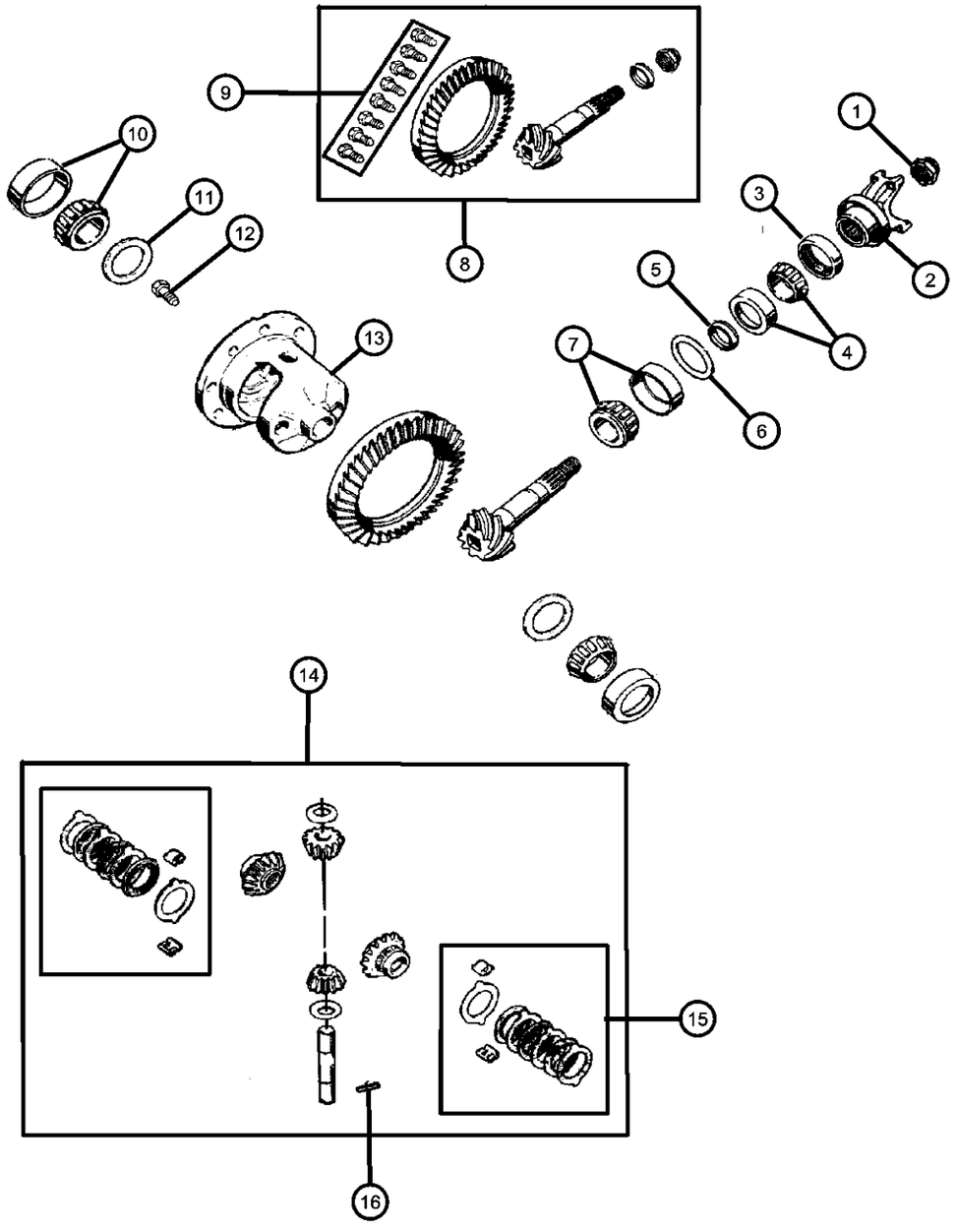

ITEM	PART NUMBER	QTY	LINE	SERIES	BODY	ENGINE	TRANS	TRIM	DESCRIPTION
Note:Sales Codes; [DMD]=Axle Ratio - 3.55 [DME]=Axle Ratio - 3.73 [DMM]=Axle Ratio - 3.07 [DRJ]=Axle - Rear,Dana M35/194MM [DRM]=Axle - Rear,Dana 35C/194MM									
1	04720895	1							NUT, Pinion Yoke
2									YOKE, Axle
	04746835	1							[DMM,DME]
	04797552	1							[DMD]
3	83504946	1							SEAL, Drive Pinion
4	05252508	1							BEARING, Drive Pinion, Bearing and Cup, Front
5	J3175779	1							SPACER, Drive Pinion Bearing
6	04720922	1							SHIM KIT, Pinion Shaft
7	05252507	1							BEARING, Drive Pinion, Bearing and Cup, Rear
8									GEAR KIT, Ring And Pinion
	04761676	1							[DMD]
	04761678	1							[DME]
	83505472	1							[DMM]
9	04720891	1							BOLT KIT, Ring Gear, Mounting
10	J8126500	1							BEARING, Differential
11	83503004	1							SHIM KIT, Differential
12	05252503	10							SCREW, Drive GearMounting
13									CASE, Differential
	05252496	1							[DMD,DME]
	05252512	1							[DMM]
14	04773010	1							GEAR KIT, Center Differential
15	05252506	1							DISC AND PLATE KIT, Differential
16	05252502	1							PIN, Differential Shaft

CHEROKEE (XJ)

SERIES	LINE	BODY	ENGINE	TRANSMISSION
L = LOWLINE	T = JEEP - 2WD B = JEEP - 2WD (RHD) J = JEEP - 4WD U = JEEP - 4WD (RHD)	72 = SPORT UTILITY 2-DR 74 = SPORT UTILITY 4-DR	ENC = 2.5L 4 Cyl Turbo Diesel Engine EPB = 2.5L 4 Cylinder Engine EPE = Engine - 2.5L Power Tech I-4 Cyl. ERH = 4.0L Power Tech I-6 Engine	DDQ = 5-Speed Manual Transmission DGS = 4-Speed Automatic AW4 Transmission DGO = ALL AUTOMATIC TRANSMISSIONS DBB = ALL MANUAL TRANSMISSIONS

Vent,Axle
Figure 3-310

ITEM	PART NUMBER	QTY	LINE	SERIES	BODY	ENGINE	TRANS	TRIM	DESCRIPTION
1	J3187999	1							VENT, Axle
2	04443176	1							HOSE, Fuel, .31 I.D. 50 Foot Roll
3	52067508	1							BOLT, Axle VentLower

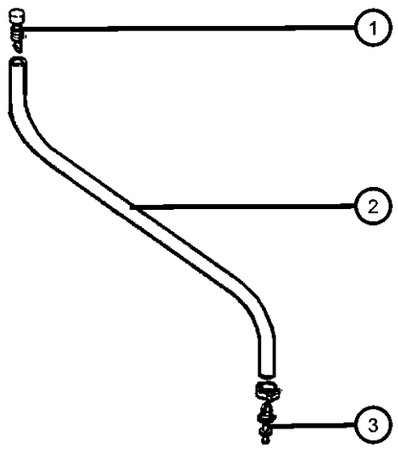

CHEROKEE (XJ)

SERIES	LINE	BODY	ENGINE	TRANSMISSION
L = LOWLINE	T = JEEP - 2WD B = JEEP - 2WD (RHD) J = JEEP - 4WD U = JEEP - 4WD (RHD)	72 = SPORT UTILITY 2-DR 74 = SPORT UTILITY 4-DR	ENC = 2.5L 4 Cyl Turbo Diesel Engine EPB = 2.5L 4 Cylinder Engine EPE = Engine - 2.5L Power Tech I-4 Cyl. ERH = 4.0L Power Tech I-6 Engine	DDQ = 5-Speed Manual Transmission DGS = 4-Speed Automatic AW4 Transmission DGO = ALL AUTOMATIC TRANSMISSIONS DBB = ALL MANUAL TRANSMISSIONS

Shaft, Rear Axle Dana Model 35 [DRJ,DRM]
Figure 3-410

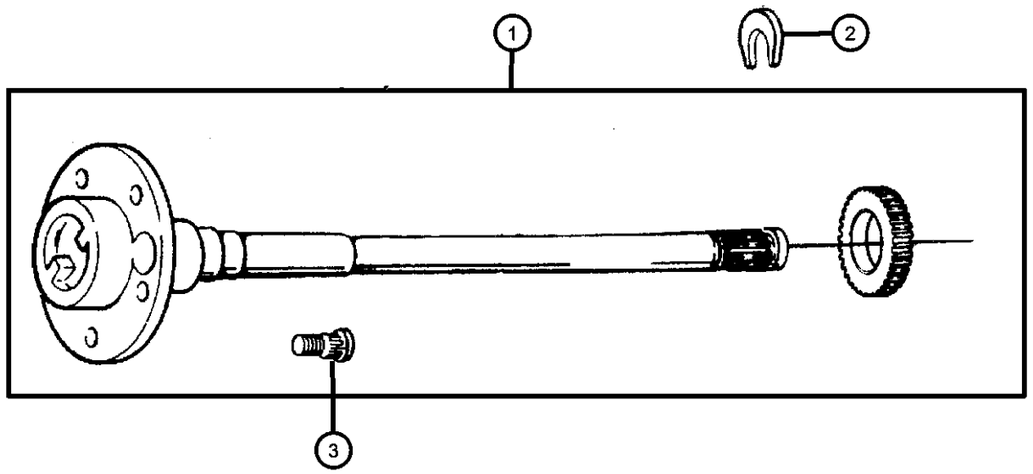

ITEM	PART NUMBER	QTY	LINE	SERIES	BODY	ENGINE	TRANS	TRIM	DESCRIPTION
1									SHAFT, Axle
	04713192	1							Right
	04713193	1							Left
2	05252505	2							RETAINER, Axle Shaft
3	83503053	10							STUD, Hub

CHEROKEE (XJ)

SERIES	LINE	BODY	ENGINE	TRANSMISSION
L = LOWLINE	T = JEEP - 2WD B = JEEP - 2WD (RHD) J = JEEP - 4WD U = JEEP - 4WD (RHD)	72 = SPORT UTILITY 2-DR 74 = SPORT UTILITY 4-DR	ENC = 2.5L 4 Cyl Turbo Diesel Engine EPB = 2.5L 4 Cylinder Engine EPE = Engine - 2.5L Power Tech I-4 Cyl. ERH = 4.0L Power Tech I-6 Engine	DDQ = 5-Speed Manual Transmission DGS = 4-Speed Automatic AW4 Transmission DGO = ALL AUTOMATIC TRANSMISSIONS DBB = ALL MANUAL TRANSMISSIONS

Group - 4

Parking Brake

004-100 Parking Brake Lever and Cables 			

Group - 4 Parking Brake

Illustration Title — Group-Fig. No.

Parking Brake Lever and Cables

Lever Assembly and Cables..... Fig. 4 - 110

Lever Assembly and Cables
Figure 4-110

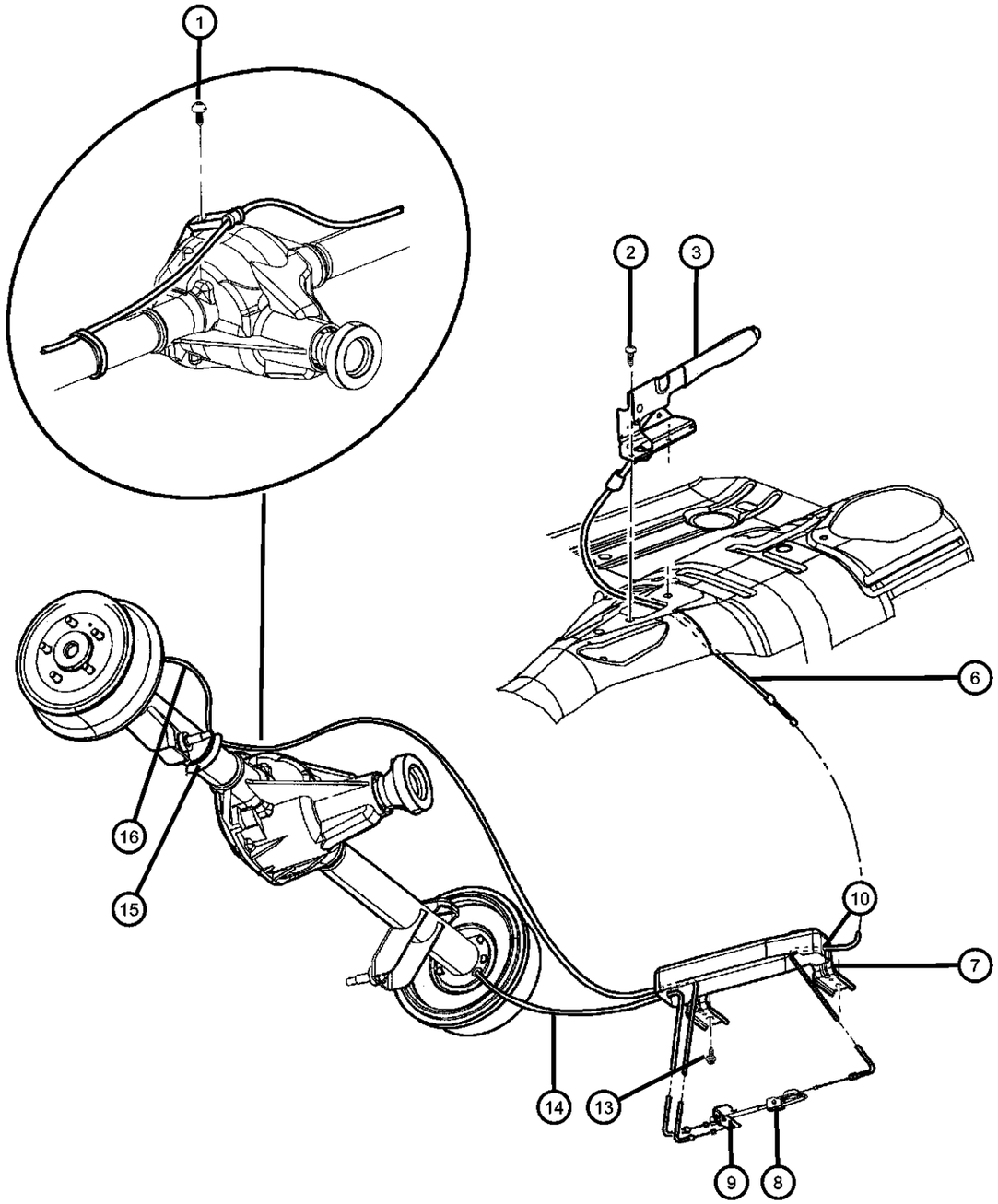

ITEM	PART NUMBER	QTY	LINE	SERIES	BODY	ENGINE	TRANS	TRIM	DESCRIPTION
1	83503053	10							SCREW AND LOCK WASHER, Hex Head, .25-20x.625, (NOT SERVICED)
2	06102141AA	3							SCREW, M6x1x25, Park Brake Lever, Mounting
3	52078943	1							LEVER, Park Brake
-4	52127960	1							SWITCH, Parking Brake
-5	52078012	1							CLIP, Parking Brake Cable, Park Brake Lever to Tensioner
6	52128164	1							CABLE, Parking BrakeFront
7	52128172	1							BRACKET, Parking Brake, Park Brake Cable Support
8	52128185	1							ADJUSTER, Parking Brake Cable
9	04423264	1							EQUALIZER, Parking Brake Cable
10	04423735	1							WASHER, Teflon, ID=.380 /OD=.760/THK=.025, Adjusting
-11	00274865	1							SPACER, Parking Brake
-12	06030607	1							NUT, Hex Flange Lock, .312-18
13	06100582	2							BOLT AND CONED WASHER, Hex Head, M8x20x20, Park Brake Cable Support Bracket, Mounting
14	52128073	1							CABLE, Parking BrakeLeft Rear
15	52007800	1							CLIP, Brake Tube
16	52128072	1							CABLE, Parking BrakeRight Rear
-17	52128235AA	1							BRACKET, Brake Cable Guide

CHEROKEE (XJ)

SERIES	LINE	BODY	ENGINE	TRANSMISSION
L = LOWLINE	T = JEEP - 2WD B = JEEP - 2WD (RHD) J = JEEP - 4WD U = JEEP - 4WD (RHD)	72 = SPORT UTILITY 2-DR 74 = SPORT UTILITY 4-DR	ENC = 2.5L 4 Cyl Turbo Diesel Engine EPB = 2.5L 4 Cylinder Engine EPE = Engine - 2.5L Power Tech I-4 Cyl. ERH = 4.0L Power Tech I-6 Engine	DDQ = 5-Speed Manual Transmission DGS = 4-Speed Automatic AW4 Transmission DGO = ALL AUTOMATIC TRANSMISSIONS DBB = ALL MANUAL TRANSMISSIONS

AR = use ase required - = Non illustrrated part

Group - 5

Service Brakes

005-100 Front Brakes 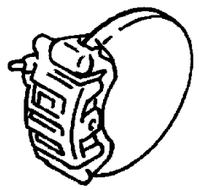	**005-200** Rear Brakes 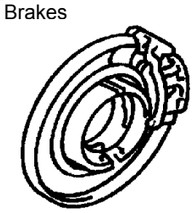	**005-300** Power Brake Booster 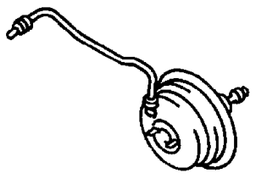	**005-400** Brake Master Cylinder 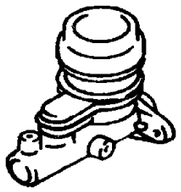
005-500 Brake Lines and Hoses 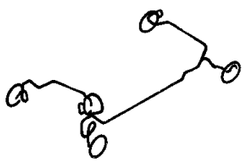	**005-600** Brake Pedals 		

Group - 5 Service Brakes

Illustration Title — Group-Fig. No.

Front Brakes
Brakes,Front ..... Fig. 5 - 110

Rear Brakes
Brakes,Rear,9 Inches X 2.5 Inches ..... Fig. 5 - 210
Brakes,Rear,10 Inches X 1 3/4 Inches ..... Fig. 5 - 220

Power Brake Booster
Master Cylinder and Booster ..... Fig. 5 - 310

Brake Master Cylinder
Hydraulic Control Unit ..... Fig. 5 - 410

Brake Lines and Hoses
Brake Lines,Front,LHD Without Anti-Lock Brakes ..... Fig. 5 - 510
Brake Lines,Front,RHD,Without Anti-Lock Brakes ..... Fig. 5 - 520
Brake Lines,Front,LHD,RHD,With Anti-Lock Brakes ..... Fig. 5 - 530
Brake Lines and Hoses,Rear ..... Fig. 5 - 540

Brake Pedals
Brake Pedal ..... Fig. 5 - 610

Brakes,Front
Figure 5-110

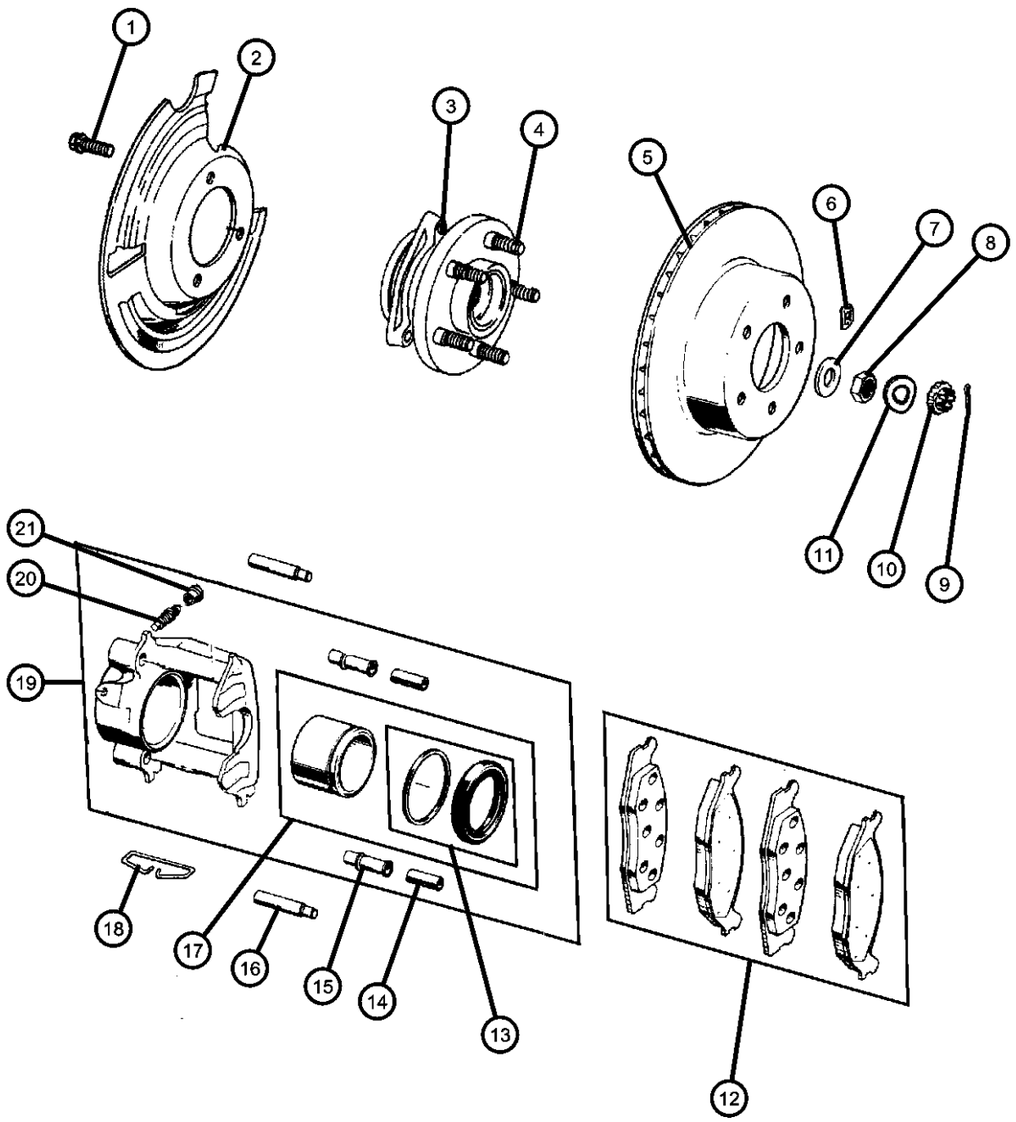

ITEM	PART NUMBER	QTY	LINE	SERIES	BODY	ENGINE	TRANS	TRIM	DESCRIPTION
1									BOLT
	34201535	6	U						Knuckle to Hub and Bearing, Mounting
		6	J						Knuckle to Hub and Bearing, Mounting
		6	T						Knuckle to Hub and Bearing, Mounting
		6	B						Knuckle to Hub and Bearing, Mounting
2									SHIELD, Brake
	52005476	1	U						Right
		1	J						Right
		1	T						Right
		1	B						Right
	52005477	1	U						Left
		1	J						Left
		1	T						Left
		1	B						Left
3									HUB AND BEARING, Brake
	53007449	2	U						
		2	J						
		2	T						
		2	B						
4									STUD, Hub
	53007463	10	U						
		10	J						
		10	T						
		10	B						
5									ROTOR, Brake
	52008440	2	U						
		2	J						
		2	T						
		2	B						
6	06026430	AR							NUT, Push
7									WASHER, Flat
	J4200096	2	U						

CHEROKEE (XJ)

SERIES	LINE	BODY	ENGINE	TRANSMISSION
L = LOWLINE	T = JEEP - 2WD B = JEEP - 2WD (RHD) J = JEEP - 4WD U = JEEP - 4WD (RHD)	72 = SPORT UTILITY 2-DR 74 = SPORT UTILITY 4-DR	ENC = 2.5L 4 Cyl Turbo Diesel Engine EPB = 2.5L 4 Cylinder Engine EPE = Engine - 2.5L Power Tech I-4 Cyl. ERH = 4.0L Power Tech I-6 Engine	DDQ = 5-Speed Manual Transmission DGS = 4-Speed Automatic AW4 Transmission DGO = ALL AUTOMATIC TRANSMISSIONS DBB = ALL MANUAL TRANSMISSIONS

AR = use ase required - = Non illustrrated part

Brakes,Front
Figure 5-110

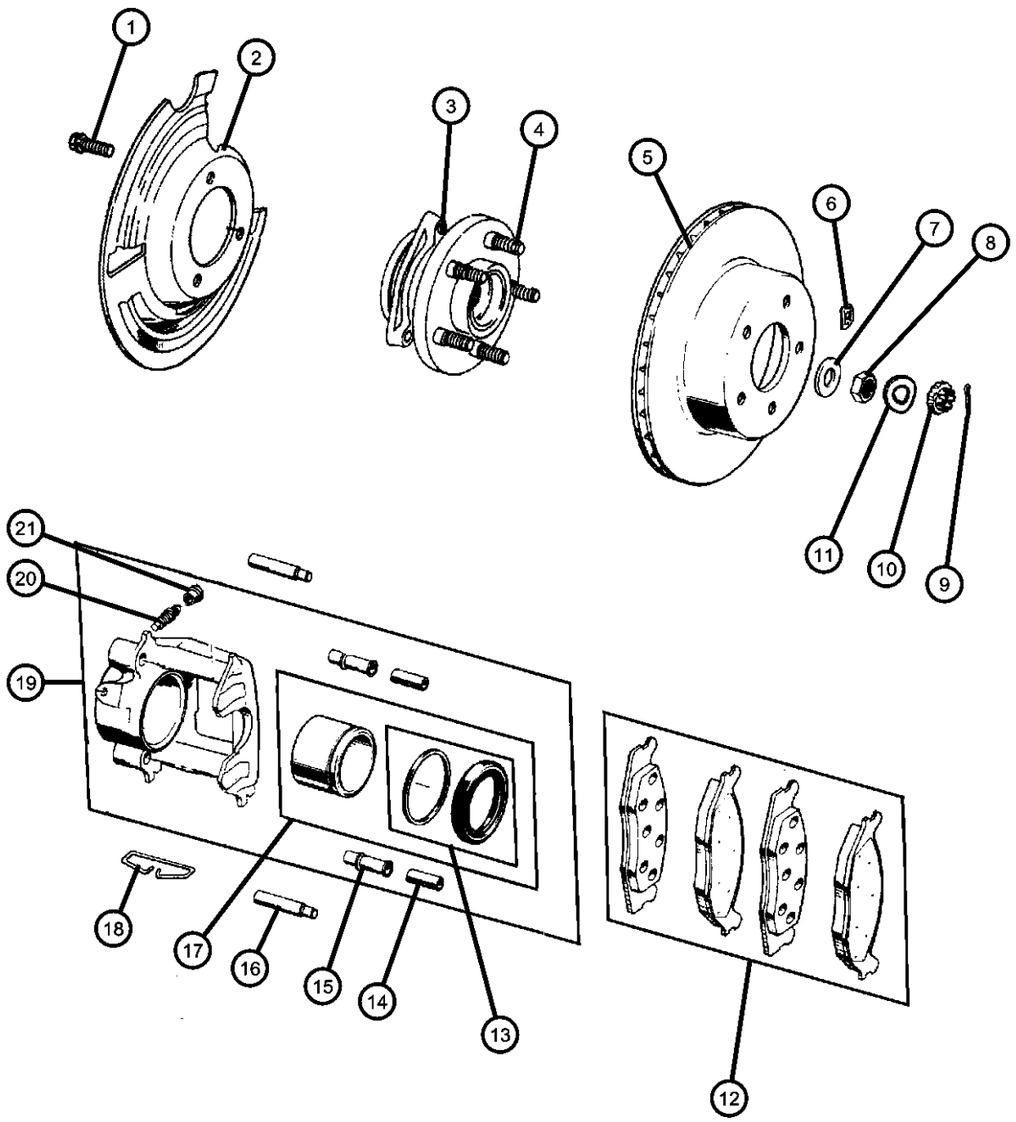

ITEM	PART NUMBER	QTY	LINE	SERIES	BODY	ENGINE	TRANS	TRIM	DESCRIPTION
		2	J						
		2	T						
		2	B						
8									NUT, Hex
	J4200095	2	U						
		2	J						
		2	T						
		2	B						
9									PIN, Cotter, M4x40.00
	11010069	6	U						
		6	J						
		6	T						
		6	B						
10									RETAINER, Hub Nut
	J4200097	2	J						
		2	T						
		2	B						
		2	U						
11									WASHER, Wave
	04740749	2	U						
		2	J						
		2	T						
		2	B						
12									PAD KIT, Front Disc Brake
	04778058AC	1	U						
		1	J						
		1	B						
		1	T						
13									BOOT AND SEAL, Disc Brake
	J8133852	1	J						
		1	B						
		1	T						
		1	U						

CHEROKEE (XJ)

SERIES	LINE	BODY	ENGINE	TRANSMISSION
L = LOWLINE	T = JEEP - 2WD B = JEEP - 2WD (RHD) J = JEEP - 4WD U = JEEP - 4WD (RHD)	72 = SPORT UTILITY 2-DR 74 = SPORT UTILITY 4-DR	ENC = 2.5L 4 Cyl Turbo Diesel Engine EPB = 2.5L 4 Cylinder Engine EPE = Engine - 2.5L Power Tech I-4 Cyl. ERH = 4.0L Power Tech I-6 Engine	DDQ = 5-Speed Manual Transmission DGS = 4-Speed Automatic AW4 Transmission DGO = ALL AUTOMATIC TRANSMISSIONS DBB = ALL MANUAL TRANSMISSIONS

Brakes,Front
Figure 5-110

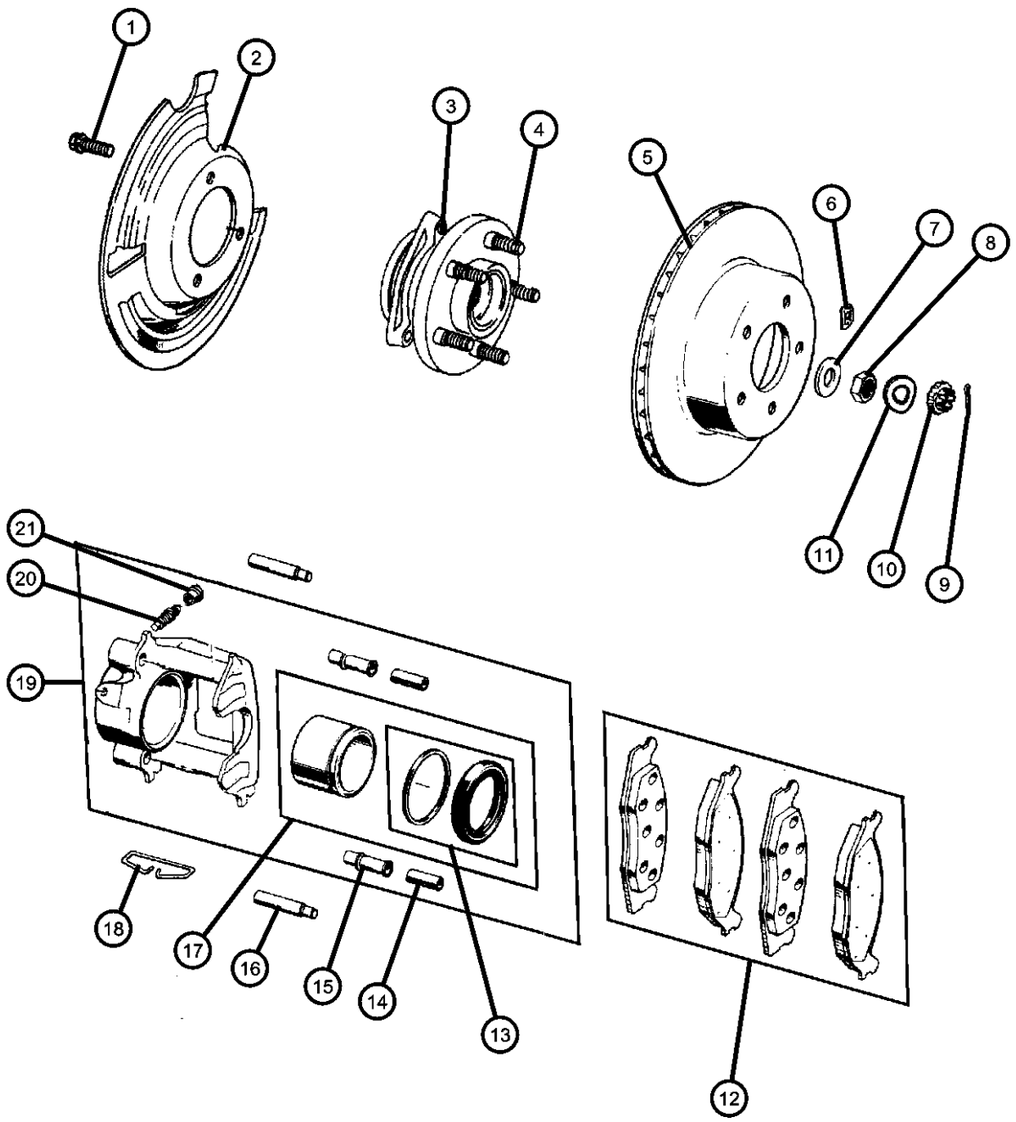

ITEM	PART NUMBER	QTY	LINE	SERIES	BODY	ENGINE	TRANS	TRIM	DESCRIPTION
14									BUSHING, Disc Brake Caliper
	04383471	2	J						
		2	B						
		2	T						
		2	U						
15									SLEEVE, Disc Brake Caliper
	04423573	2	J						
		2	B						
		2	T						
		2	U						
16									PIN, Caliper
	05253000	4	U						
		4	J						
		4	T						
		4	B						
17									PISTON, Brake
	05252614	1	U						
		1	J						
		1	B						
		1	T						
18									CLIP, Brake Caliper
	J3239865	1	J						
		1	B						
		1	T						
		1	U						
19									CALIPER, Disc Brake
	05252984	1	U						Right
		1	J						Right
		1	B						Right
		1	T						Right
	05252985	1	U						Left
		1	J						Left
		1	B						Left

CHEROKEE (XJ)

SERIES	LINE	BODY	ENGINE	TRANSMISSION
L = LOWLINE	T = JEEP - 2WD B = JEEP - 2WD (RHD) J = JEEP - 4WD U = JEEP - 4WD (RHD)	72 = SPORT UTILITY 2-DR 74 = SPORT UTILITY 4-DR	ENC = 2.5L 4 Cyl Turbo Diesel Engine EPB = 2.5L 4 Cylinder Engine EPE = Engine - 2.5L Power Tech I-4 Cyl. ERH = 4.0L Power Tech I-6 Engine	DDQ = 5-Speed Manual Transmission DGS = 4-Speed Automatic AW4 Transmission DGO = ALL AUTOMATIC TRANSMISSIONS DBB = ALL MANUAL TRANSMISSIONS

Brakes,Front
Figure 5-110

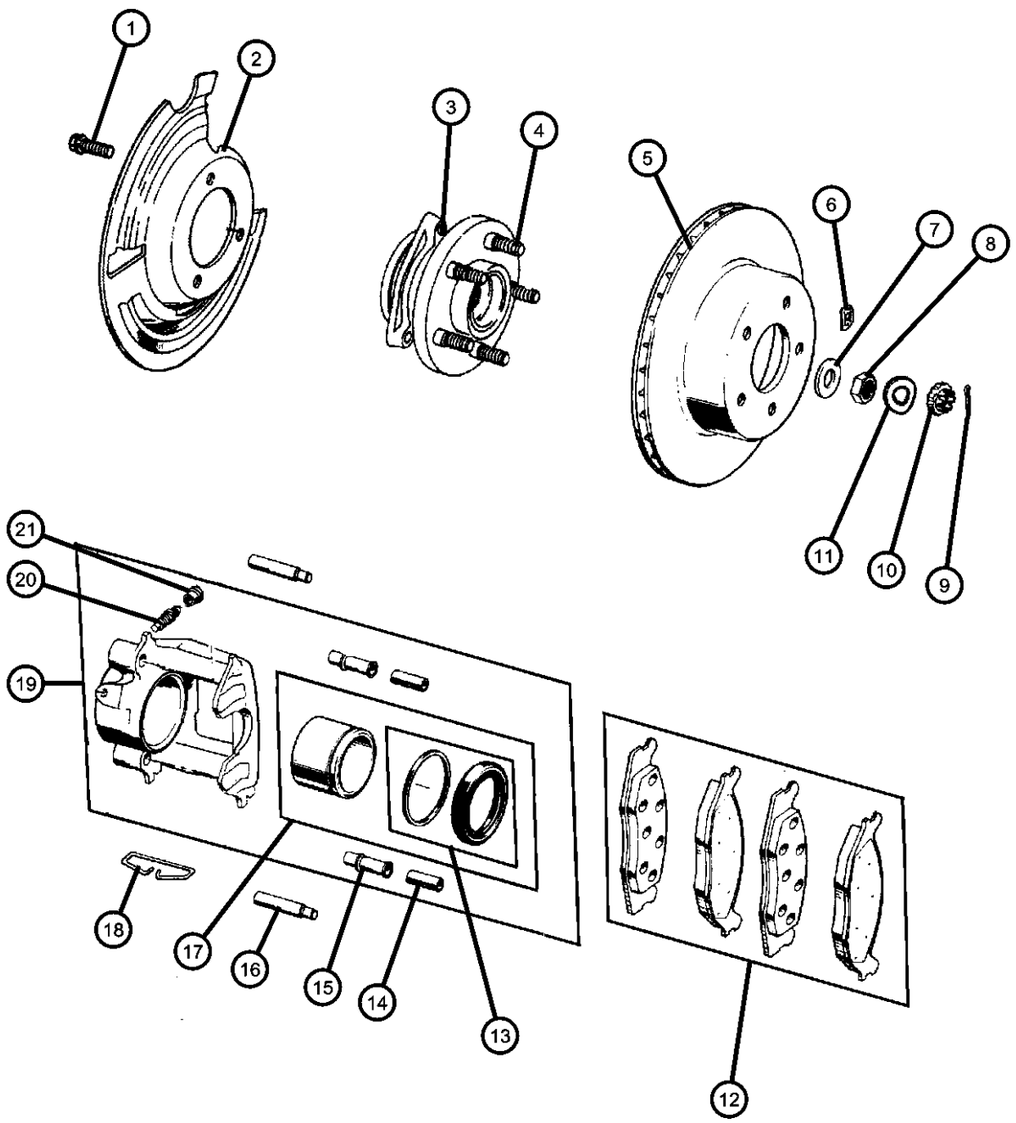

ITEM	PART NUMBER	QTY	LINE	SERIES	BODY	ENGINE	TRANS	TRIM	DESCRIPTION
		1	T						Left
20									SCREW, Bleeder
	J3203313	1	J						
		1	B						
		1	T						
		1	U						
21									CAP, Bleeder
	04238717	1	U						
		1	J						
		1	B						
		1	T						

CHEROKEE (XJ)

SERIES	LINE	BODY	ENGINE	TRANSMISSION
L = LOWLINE	T = JEEP - 2WD B = JEEP - 2WD (RHD) J = JEEP - 4WD U = JEEP - 4WD (RHD)	72 = SPORT UTILITY 2-DR 74 = SPORT UTILITY 4-DR	ENC = 2.5L 4 Cyl Turbo Diesel Engine EPB = 2.5L 4 Cylinder Engine EPE = Engine - 2.5L Power Tech I-4 Cyl. ERH = 4.0L Power Tech I-6 Engine	DDQ = 5-Speed Manual Transmission DGS = 4-Speed Automatic AW4 Transmission DGO = ALL AUTOMATIC TRANSMISSIONS DBB = ALL MANUAL TRANSMISSIONS

Brakes,Rear,9 Inches X 2.5 Inches
Figure 5-210

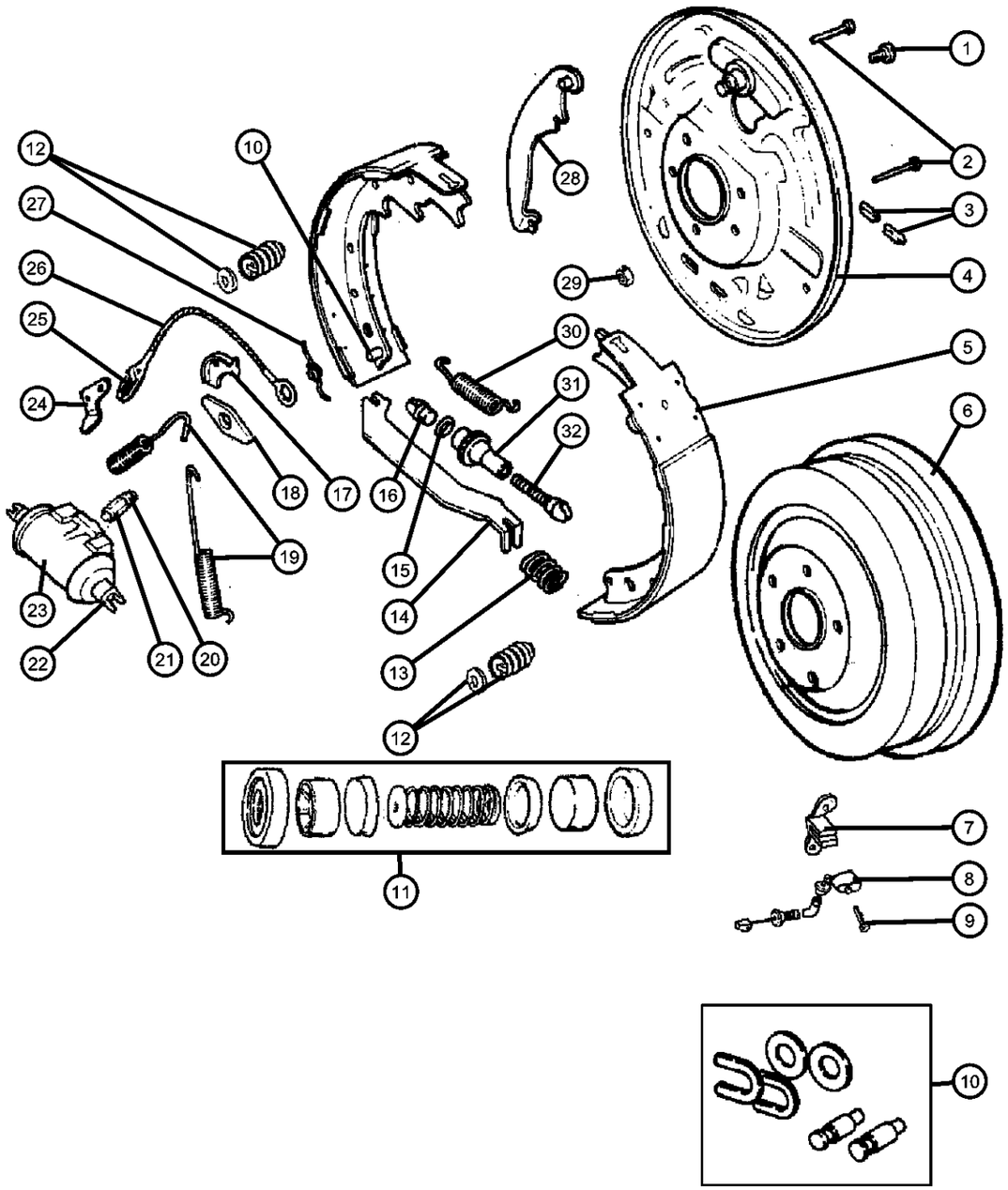

ITEM	PART NUMBER	QTY	LINE	SERIES	BODY	ENGINE	TRANS	TRIM	DESCRIPTION
Note:Sales Codes; [BGA]=Brakes,- Power Front Disc/Rear Drum [BGK]=Brakes - 4-Wheel Antilock									
1	06028921	2							BOLT, Hex Head, Wheel Cylinder, Mounting
2	02260548	2							PIN, Brake Shoe Hold Down
3	04238721	2							PLUG, Brake Adjusting Hole
4									PLATE, Brake Backing
	04856718	1							[BGK], Right
	04856719	1							[BGK], Left
	05017760AA	1							[BGA], Right
	05017761AA	1							[BGA], Left
5	04723367	1							SHOE AND LINING KIT, Drum
6	52005350	2							DRUM, Brake
7									BRACKET, Brake Sensor
	52007804	1							Right
	52007805	1							Left
8									SENSOR, Anti-Lock Brakes
	52005932	1							Right
	52005933	1							Left
9	83504920	2							BOLT, ABS Sensor, Mounting
10	04049681	1							HARDWARE PACKAGE, Rear Brake
11	05252630	1							REPAIR KIT, Wheel Cylinder
12	04313062	2							SPRING, Brake Shoe Hold Down
13	04713590	1							STRUT, Parking Brake
14	06027559	1							WASHER, Adjuster Button
15	02944586	1							BUTTON, Rear Brake Auto Adjust
16	02260793	1							GUIDE, Brake Adjusting Cable
17	04313075	1							PLATE, Brake Shoe Guide
18	02881676	2							SPRING, Brake Shoe Return
19	04238717	1							CAP, Bleeder
20	03766674	1							BLEEDER SCREW, Brake
21	03766674	1							LINK, Brake, Purchase Wheel Cylinder, (NOT SERVICED)
22	04423601	1							CYLINDER, Wheel

CHEROKEE (XJ)

SERIES	LINE	BODY	ENGINE	TRANSMISSION
L = LOWLINE	T = JEEP - 2WD B = JEEP - 2WD (RHD) J = JEEP - 4WD U = JEEP - 4WD (RHD)	72 = SPORT UTILITY 2-DR 74 = SPORT UTILITY 4-DR	ENC = 2.5L 4 Cyl Turbo Diesel Engine EPB = 2.5L 4 Cylinder Engine EPE = Engine - 2.5L Power Tech I-4 Cyl. ERH = 4.0L Power Tech I-6 Engine	DDQ = 5-Speed Manual Transmission DGS = 4-Speed Automatic AW4 Transmission DGO = ALL AUTOMATIC TRANSMISSIONS DBB = ALL MANUAL TRANSMISSIONS

Brakes,Rear,9 Inches X 2.5 Inches
Figure 5-210

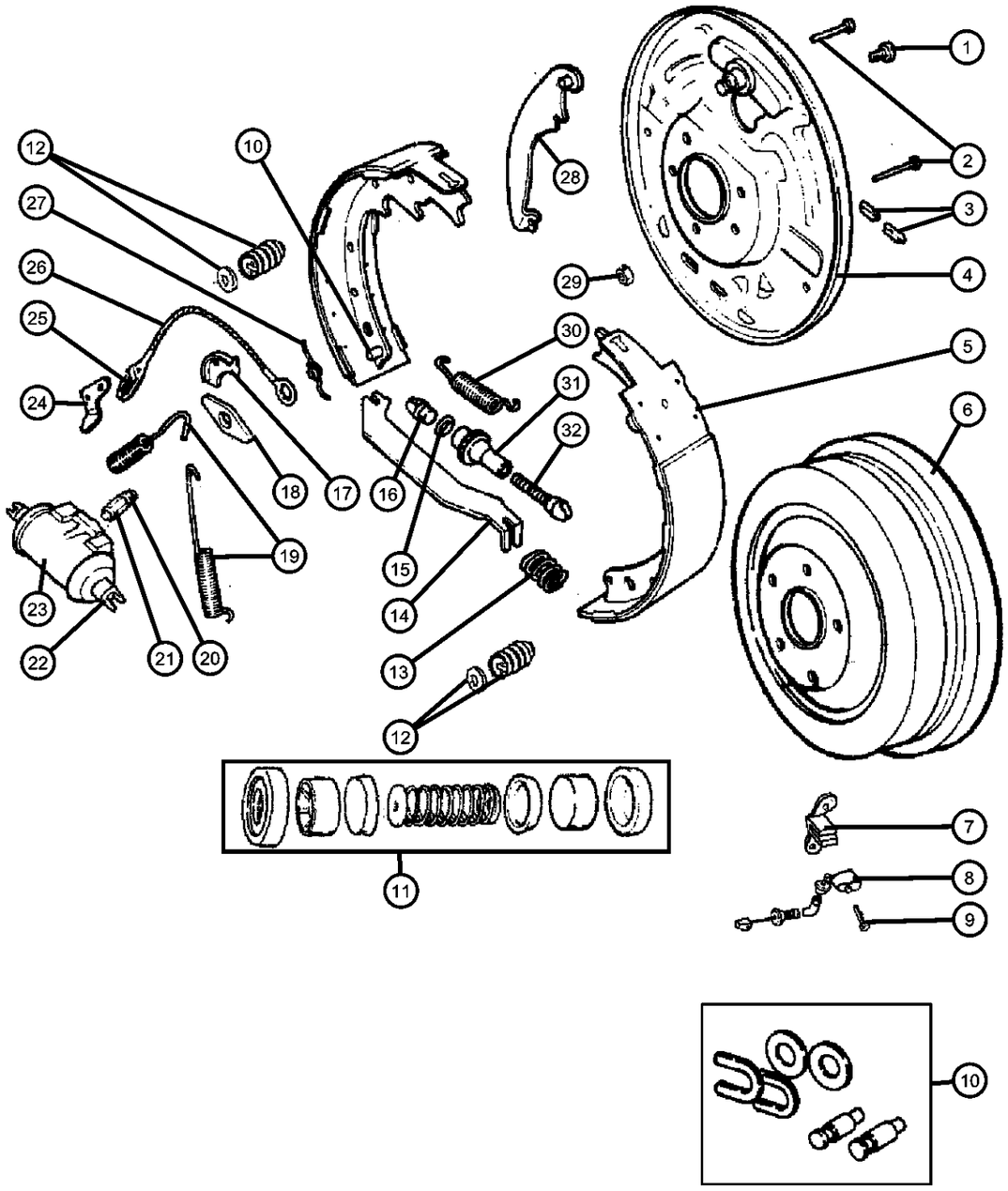

ITEM	PART NUMBER	QTY	LINE	SERIES	BODY	ENGINE	TRANS	TRIM	DESCRIPTION
23	04761759	1							LEVER, Park Brake Adjusting
24	03461660	1							SPRING, Adjuster Cable
25	03461662	1							CABLE, Brake Automatic Adjuster
26									SPRING, Brake Auto Adjuster Lever
	02944580	1							Right
	02944581	1							Left
27									LEVER, Park Brake
	04313810	1							Right
	04313811	1							Left
28	00152345	8							NUT, Backing Plate to Axle Housing, Mounting
29	04423085	1							SPRING, Brake Shoe to Shoe
30									NUT, Rear Brake Auto Adjust Pivot
	02944692	1							Right
	02944693	1							Left
31									SCREW, Brake Adjusting
	04423898	1							Right
	04423899	1							Left
-32									SCREW, Brake Adjusting
	04423900	1							Includes 15,16,31,32, Right
	04423901	1							Includes 15,16,31,32, Left

CHEROKEE (XJ)

SERIES	LINE	BODY	ENGINE	TRANSMISSION
L = LOWLINE	T = JEEP - 2WD B = JEEP - 2WD (RHD) J = JEEP - 4WD U = JEEP - 4WD (RHD)	72 = SPORT UTILITY 2-DR 74 = SPORT UTILITY 4-DR	ENC = 2.5L 4 Cyl Turbo Diesel Engine EPB = 2.5L 4 Cylinder Engine EPE = Engine - 2.5L Power Tech I-4 Cyl. ERH = 4.0L Power Tech I-6 Engine	DDQ = 5-Speed Manual Transmission DGS = 4-Speed Automatic AW4 Transmission DGO = ALL AUTOMATIC TRANSMISSIONS DBB = ALL MANUAL TRANSMISSIONS

Brakes,Rear,10 Inches X 1 3/4 Inches
Figure 5-220

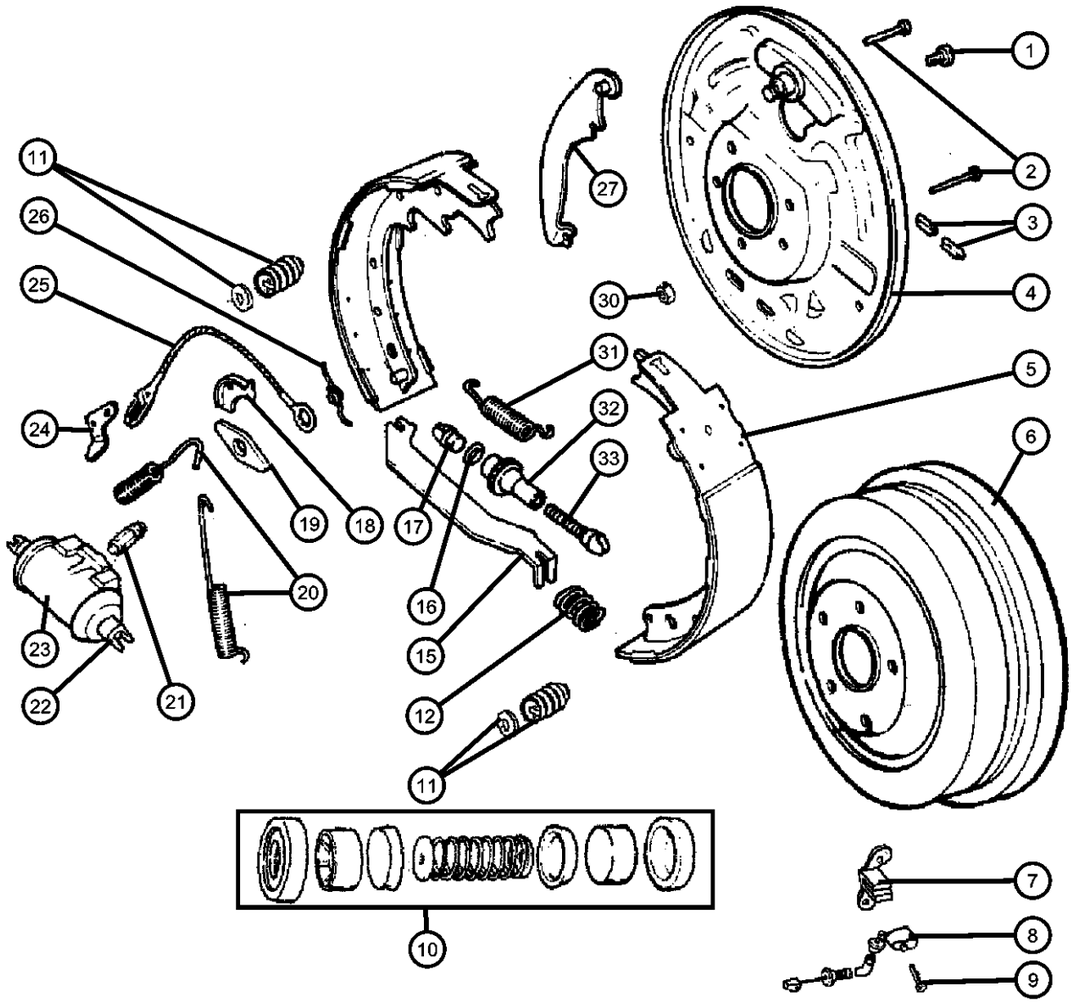

ITEM	PART NUMBER	QTY	LINE	SERIES	BODY	ENGINE	TRANS	TRIM	DESCRIPTION
Note:Sales Codes;									
[AHB]=Police Group									
[BGA]=Brakes,- Power Front Disc/Rear Drum									
[BGK]=Brakes - 4-Wheel Antilock									
1	06028921	2							BOLT, Hex Head, Wheel Cylinder, Mounting
2	04746783	2							PIN, Brake Shoe Hold Down
3	32000147	2							PLUG, Brake Adjusting Hole
4									PLATE, Brake Backing
	04773490	1							Right
	04773491	1							Left
5	04796310	1							SHOE AND LINING KIT, Drum
6	52007502	2							DRUM, Brake
7									BRACKET, Brake Sensor
	52007804	1							Right
	52007805	1							Left
8									SENSOR, Anti-Lock Brakes
	52005932	1							Right
	52005933	1							Left
9	83504920	2							BOLT, Abs Sensor, Mounting
10	83500987	1							REPAIR KIT, Wheel Cylinder
11	04746782	2							SPRING, Brake Shoe Hold Down
12	83504918	1							SPRING, Parking Brake Strut
-13	04713364	1							WASHER, Parking Brake Strut, Mounting
-14	04773762	1							CLIP, Park Brake StrutMounting
15									STRUT, Parking Brake
	04713366	1							Right
	04713367	1							Left
16	04746585	1							WASHER, Rear Brake Adjuster
17	04746586	1							SOCKET, Brake Adjusting
18	J3201947	1							GUIDE, Brake Adjusting Cable
19	02260788	1							PLATE, Brake Shoe Guide
20	J3112780	1							SPRING, Brake Shoe Return
21	J3203313	1							SCREW, Bleeder

CHEROKEE (XJ)

SERIES	LINE	BODY	ENGINE	TRANSMISSION
L = LOWLINE	T = JEEP - 2WD B = JEEP - 2WD (RHD) J = JEEP - 4WD U = JEEP - 4WD (RHD)	72 = SPORT UTILITY 2-DR 74 = SPORT UTILITY 4-DR	ENC = 2.5L 4 Cyl Turbo Diesel Engine EPB = 2.5L 4 Cylinder Engine EPE = Engine - 2.5L Power Tech I-4 Cyl. ERH = 4.0L Power Tech I-6 Engine	DDQ = 5-Speed Manual Transmission DGS = 4-Speed Automatic AW4 Transmission DGO = ALL AUTOMATIC TRANSMISSIONS DBB = ALL MANUAL TRANSMISSIONS

Brakes,Rear,10 Inches X 1 3/4 Inches
Figure 5-220

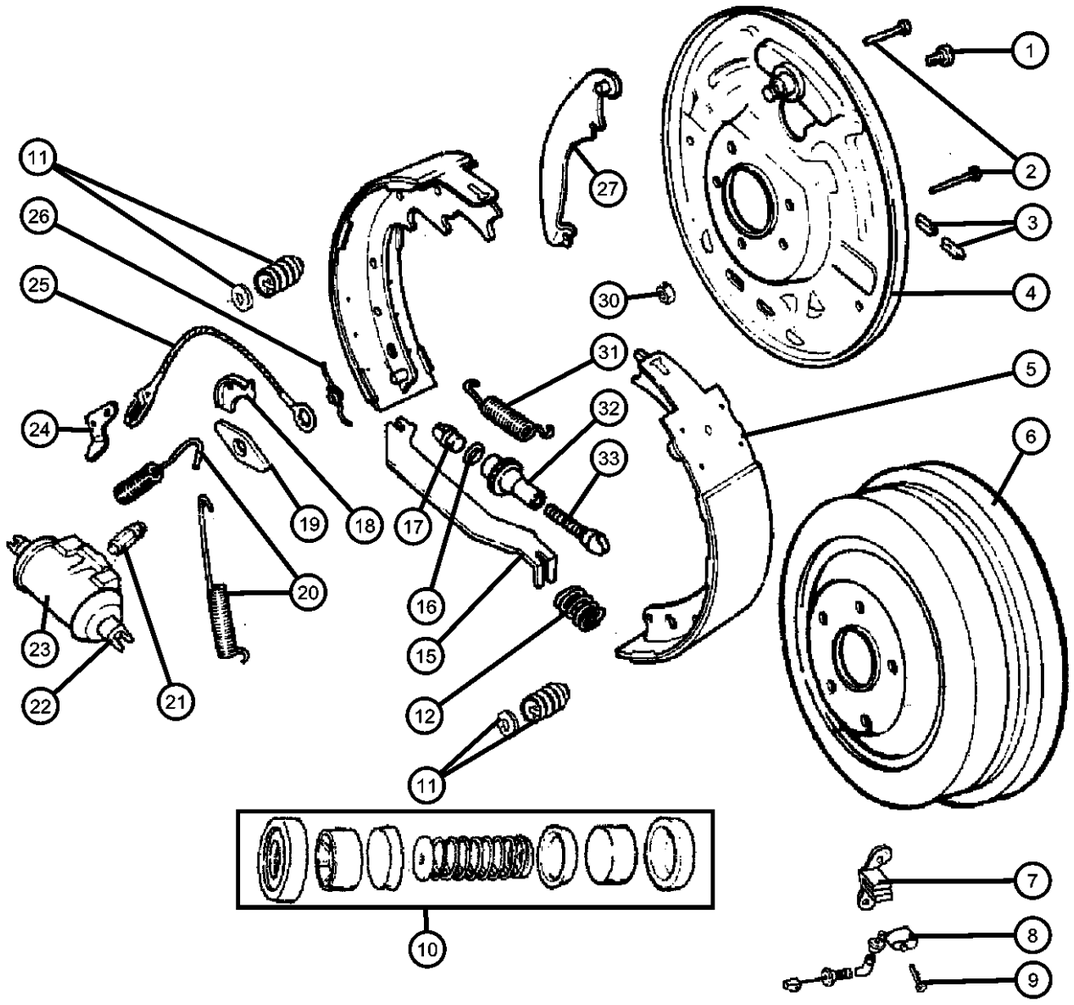

ITEM	PART NUMBER	QTY	LINE	SERIES	BODY	ENGINE	TRANS	TRIM	DESCRIPTION
22	J0048331	2							LINK, Brake Cylinder
23									CYLINDER, Wheel
	52000848	1							Right
	52000849	1							Left
24									LEVER, Park Brake Adjusting
	04728546	1							Right
	04728547	1							Left
25	04713350	1							CABLE, Brake Automatic Adjuster
26									SPRING, Auto Adjusting
	04746582	1							Right
	04746583	1							Left
27									LEVER, Park Brake
	04713362	1							Right
	04713363	1							Left
-28	83502900	1							WASHER, Parking Brake LeverMounting
-29	J3108202	1							RETAINER, Parking Brake LeverMounting
30	J9411783	8							NUT, Backing Plate to Axle Housing, Mounting
31	04746588	1							SPRING, Brake Shoe to Shoe
32									NUT, Rear Brake Auto Adjust Pivot
	02944692	1							Right
	02944693	1							Left
33									SCREW, Brake Adjusting
	02881686	1							Right
	02881687	1							Left

CHEROKEE (XJ)

SERIES	LINE	BODY	ENGINE	TRANSMISSION
L = LOWLINE	T = JEEP - 2WD B = JEEP - 2WD (RHD) J = JEEP - 4WD U = JEEP - 4WD (RHD)	72 = SPORT UTILITY 2-DR 74 = SPORT UTILITY 4-DR	ENC = 2.5L 4 Cyl Turbo Diesel Engine EPB = 2.5L 4 Cylinder Engine EPE = Engine - 2.5L Power Tech I-4 Cyl. ERH = 4.0L Power Tech I-6 Engine	DDQ = 5-Speed Manual Transmission DGS = 4-Speed Automatic AW4 Transmission DGO = ALL AUTOMATIC TRANSMISSIONS DBB = ALL MANUAL TRANSMISSIONS

Master Cylinder and Booster
Figure 5-310

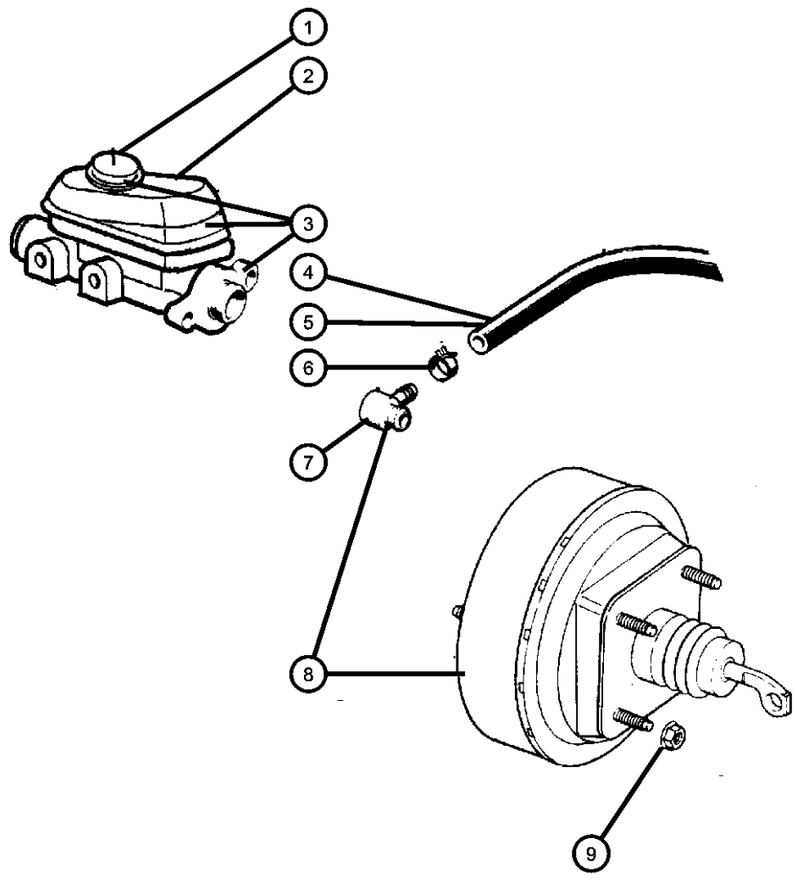

ITEM	PART NUMBER	QTY	LINE	SERIES	BODY	ENGINE	TRANS	TRIM	DESCRIPTION
Note:EP0= 2.5L Gas Engine, ER0= 4.0L Gas Engine, ENC= 2.5L Diesel Engine									
1	04683656	1							CAP, Master Cylinder Reservoir
2	04761942	1							RESERVOIR, Brake Master Cylinder
3	04761941	1							MASTER CYLINDER, Brake
4									HOSE, Vacuum Supply
	52008761	1	B, U						[EP0]
	52009407	1	J, T						[EP0]
	52128003	1	J, T						[ER0] With [NAC]
	52128232	1	J, T						[ENC]
	52128290AA	1	B, U						[ER0]
5	03879277	1	J, T						HOSE, Brake Booster, [ER0] Without [NAC]
6	02448770	1							CLAMP, Hose, As Required
7									VALVE, Vacuum Check
	04798873	1							[ENC]
	J4487455	1							[EP0,ER0]
8									BOOSTER, Power Brake
	04856672AB	1							[EP0,ER0]
	04856673AB	1							[ENC]
9	J4003909	4							NUT, Hex Flange With Serration, Booster to Firewall, Mounting
-10	11502811	2							NUT, Hex Flange Lock, M8x1.25, Master Cylinder to Booster, Mounting

CHEROKEE (XJ)

SERIES	LINE	BODY	ENGINE	TRANSMISSION
L = LOWLINE	T = JEEP - 2WD B = JEEP - 2WD (RHD) J = JEEP - 4WD U = JEEP - 4WD (RHD)	72 = SPORT UTILITY 2-DR 74 = SPORT UTILITY 4-DR	ENC = 2.5L 4 Cyl Turbo Diesel Engine EPB = 2.5L 4 Cylinder Engine EPE = Engine - 2.5L Power Tech I-4 Cyl. ERH = 4.0L Power Tech I-6 Engine	DDQ = 5-Speed Manual Transmission DGS = 4-Speed Automatic AW4 Transmission DGO = ALL AUTOMATIC TRANSMISSIONS DBB = ALL MANUAL TRANSMISSIONS

Hydraulic Control Unit
Figure 5-410

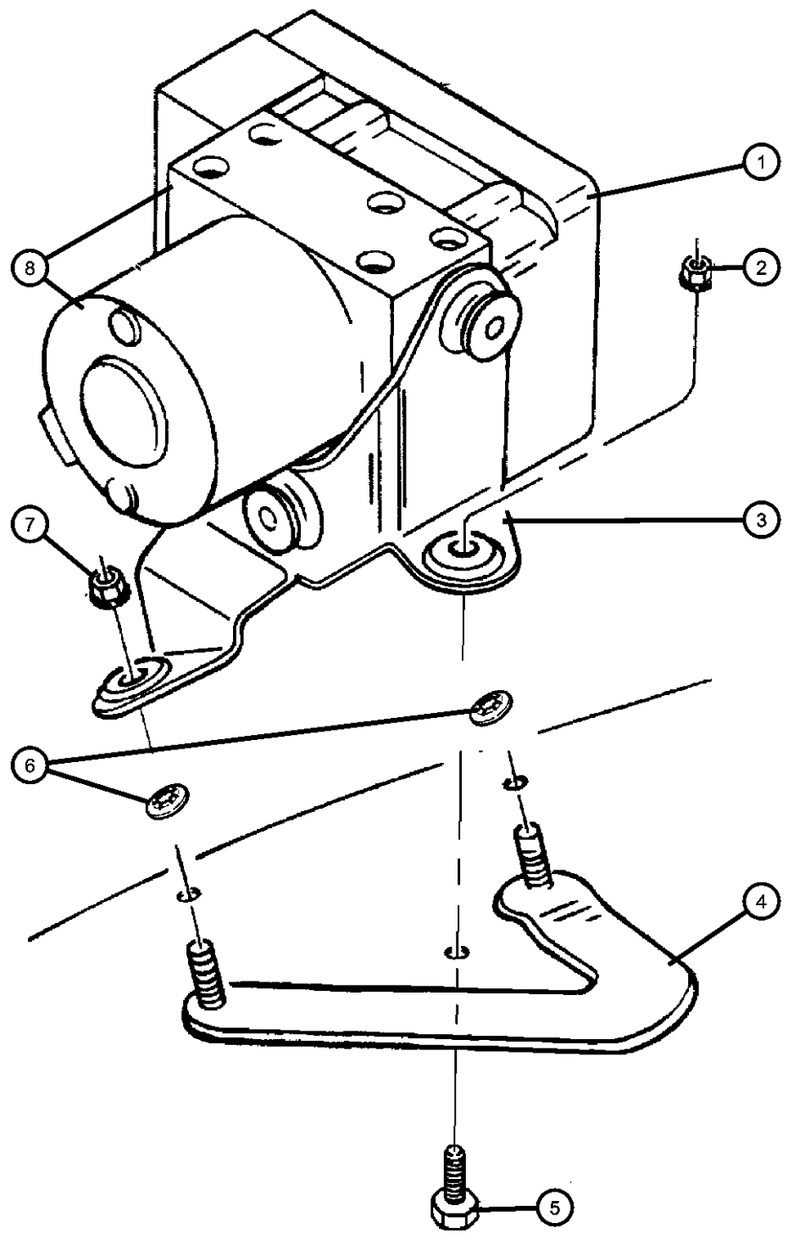

ITEM	PART NUMBER	QTY	LINE	SERIES	BODY	ENGINE	TRANS	TRIM	DESCRIPTION
1	56027931AB	1							MODULE, Anti-lock Brakes
2	06503445	1							NUT, HCU to Wheelhouse, Mounting
3	52127929	1							BRACKET, Hydraulic Control Unit
4	52008230	1							STUD PLATE, Hydraulic Control Unit
5	06101453	1							SCREW AND WASHER, Hex Head, M8x1.25x30, HCU to Wheelhouse, Mounting
6	06100841	2							PUSH NUT, M8, Hold Stud Plate to Wheelhouse
7	34201711	2							NUT, Hex Flange, M8x1.25, HCU to Wheelhouse, Mounting
8	52009137	1							CONTROL UNIT, Anti-Lock Brake

CHEROKEE (XJ)

SERIES	LINE	BODY	ENGINE	TRANSMISSION
L = LOWLINE	T = JEEP - 2WD B = JEEP - 2WD (RHD) J = JEEP - 4WD U = JEEP - 4WD (RHD)	72 = SPORT UTILITY 2-DR 74 = SPORT UTILITY 4-DR	ENC = 2.5L 4 Cyl Turbo Diesel Engine EPB = 2.5L 4 Cylinder Engine EPE = Engine - 2.5L Power Tech I-4 Cyl. ERH = 4.0L Power Tech I-6 Engine	DDQ = 5-Speed Manual Transmission DGS = 4-Speed Automatic AW4 Transmission DGO = ALL AUTOMATIC TRANSMISSIONS DBB = ALL MANUAL TRANSMISSIONS

Brake Lines,Front,LHD Without Anti-Lock Brakes
Figure 5-510

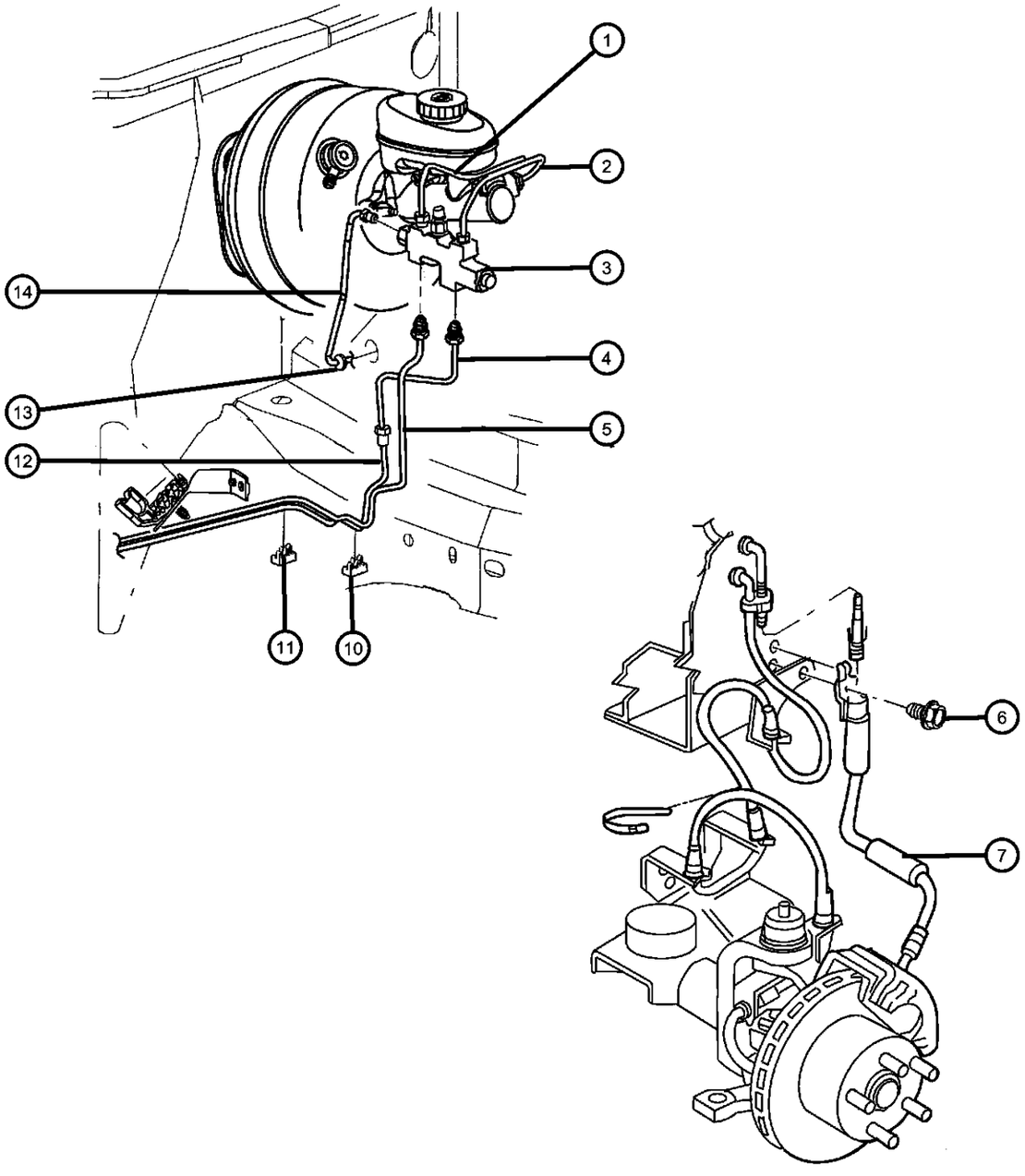

ITEM	PART NUMBER	QTY	LINE	SERIES	BODY	ENGINE	TRANS	TRIM	DESCRIPTION
1	52009069	1							TUBE, Brake, Master Cylinder to Proportioning Valve, Primary
2	52009074	1							TUBE, Brake, Master Cylinder to Proportioning Valve, Secondary
3	52129025	1							VALVE, Proportioning
4	52128170	1	J, T						TUBE, Brake, Proportioning Valve to Union
5	52127988AC	1	J, T						TUBE, Brake, Proportioning Valve to Brake Hose, Right
6	06502711	2							BOLT, Brake Hose, Mounting
7									HOSE, Brake
	52008674	1							Right
	52008675	1							Left
-8	J4006700	2							BOLT, Banjo, Brake Hose to Caliper, Mounting
-9	J3237672	4							GASKET, Brake Hose To CaliperMounting
10	52008940	5	J, T						CLIP, Brake LineMounting
11	34202688	2							CLIP, Latch&Line
12	52127967	1							TUBE, Brake, Union to Brake Hose, Rear
13	J3126237	2							GROMMET, Front Brake TubeMounting
14	52128381	1	J, T						TUBE, Brake, Proportioning Valve to Brake Hose, Left

CHEROKEE (XJ)

SERIES	LINE	BODY	ENGINE	TRANSMISSION
L = LOWLINE	T = JEEP - 2WD B = JEEP - 2WD (RHD) J = JEEP - 4WD U = JEEP - 4WD (RHD)	72 = SPORT UTILITY 2-DR 74 = SPORT UTILITY 4-DR	ENC = 2.5L 4 Cyl Turbo Diesel Engine EPB = 2.5L 4 Cylinder Engine EPE = Engine - 2.5L Power Tech I-4 Cyl. ERH = 4.0L Power Tech I-6 Engine	DDQ = 5-Speed Manual Transmission DGS = 4-Speed Automatic AW4 Transmission DGO = ALL AUTOMATIC TRANSMISSIONS DBB = ALL MANUAL TRANSMISSIONS

Brake Lines,Front,RHD,Without Anti-Lock Brakes
Figure 5-520

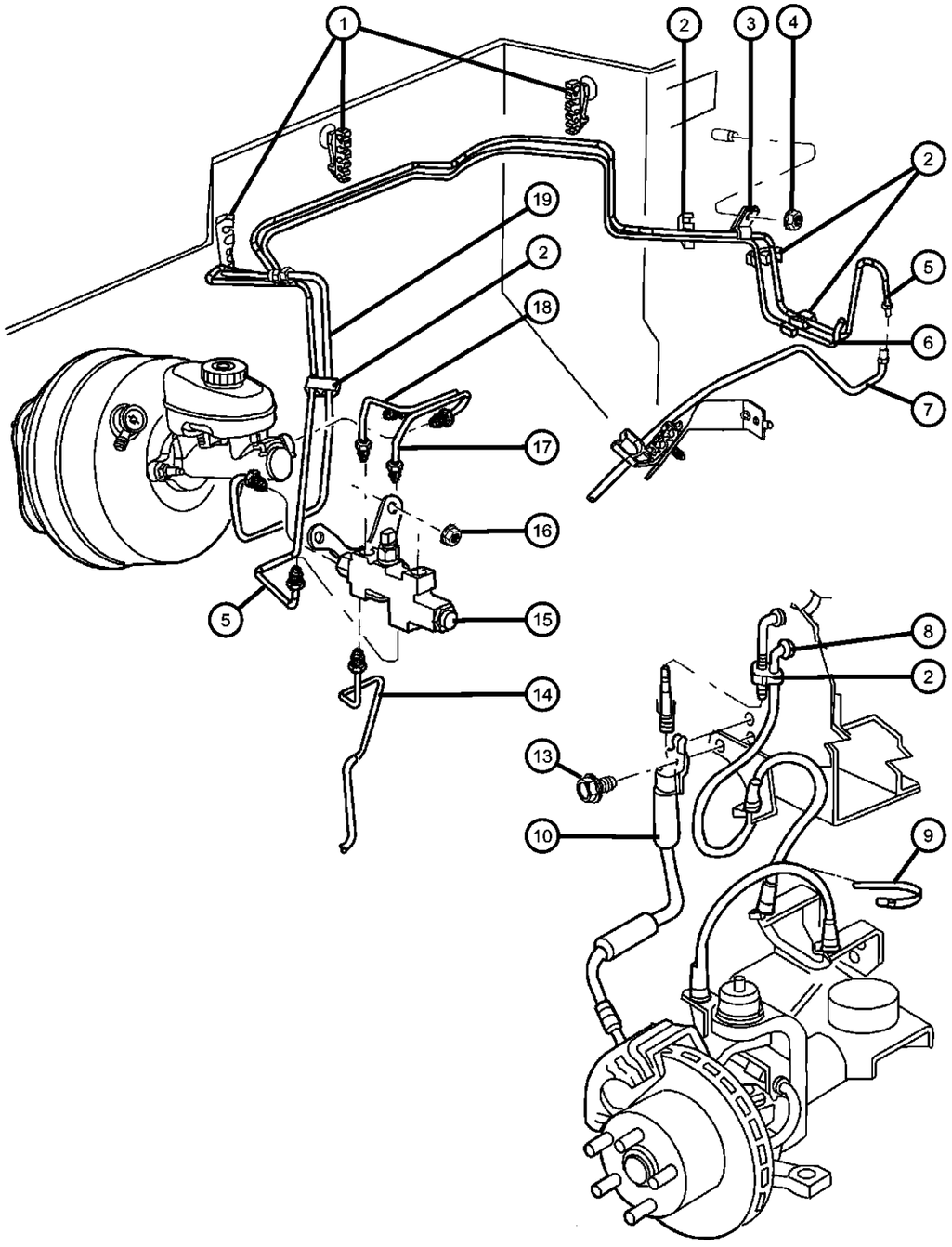

ITEM	PART NUMBER	QTY	LINE	SERIES	BODY	ENGINE	TRANS	TRIM	DESCRIPTION
1	52128060	3	B, U						CLIP, Five Way, Brake Tube to Dash, Mounting
2	52008940	5	B, U						CLIP, Brake Line, 2 Way-As Required
3	52128215	1	B, U						CLIP, Brake Line, Brake Tube to Dash
4	06100840	1	B, U						NUT, Spring
5	52128171AB	1	B, U						TUBE, Brake, Proportioning Valve to Union
6	52128327AA	1	B, U						TUBE, Brake
7	52127967	1							TUBE, Brake, Union to Brake Hose, Rear
8	J3126237	2							GROMMET, Front Brake Tube, Front Brake Tube to Wheelhouse, Mounting
9	04641780	1							STRAP, Tie
10									HOSE, Brake
	52008674	1							Right
	52008675	1							Left
-11	J3237672	4							GASKET, Brake Hose To CaliperMounting
-12	J4006700	2							BOLT, Banjo, Brake Hose to Caliper, Mounting
13	06502711	2							BOLT, Brake Hose, Mounting
14	52129084AB	1	B, U						TUBE, Brake, Proportioning Valve to Brake Hose, Right
15	52129025	1							VALVE, Proportioning
16	11502811	2							NUT, Hex Flange Lock, M8x1.25, Proportioning Valve, Mounting
17	52009074	1							TUBE, Brake, Master Cylinder to Proportioning Valve, Secondary
18	52009069	1							TUBE, Brake, Master Cylinder to Proportioning Valve, Primary
19	52128170	1	J, T						TUBE, Brake, Proportioning Valve to Union

CHEROKEE (XJ)

SERIES	LINE	BODY	ENGINE	TRANSMISSION
L = LOWLINE	T = JEEP - 2WD B = JEEP - 2WD (RHD) J = JEEP - 4WD U = JEEP - 4WD (RHD)	72 = SPORT UTILITY 2-DR 74 = SPORT UTILITY 4-DR	ENC = 2.5L 4 Cyl Turbo Diesel Engine EPB = 2.5L 4 Cylinder Engine EPE = Engine - 2.5L Power Tech I-4 Cyl. ERH = 4.0L Power Tech I-6 Engine	DDQ = 5-Speed Manual Transmission DGS = 4-Speed Automatic AW4 Transmission DGO = ALL AUTOMATIC TRANSMISSIONS DBB = ALL MANUAL TRANSMISSIONS

Brake Lines,Front,LHD,RHD,With Anti-Lock Brakes
Figure 5-530

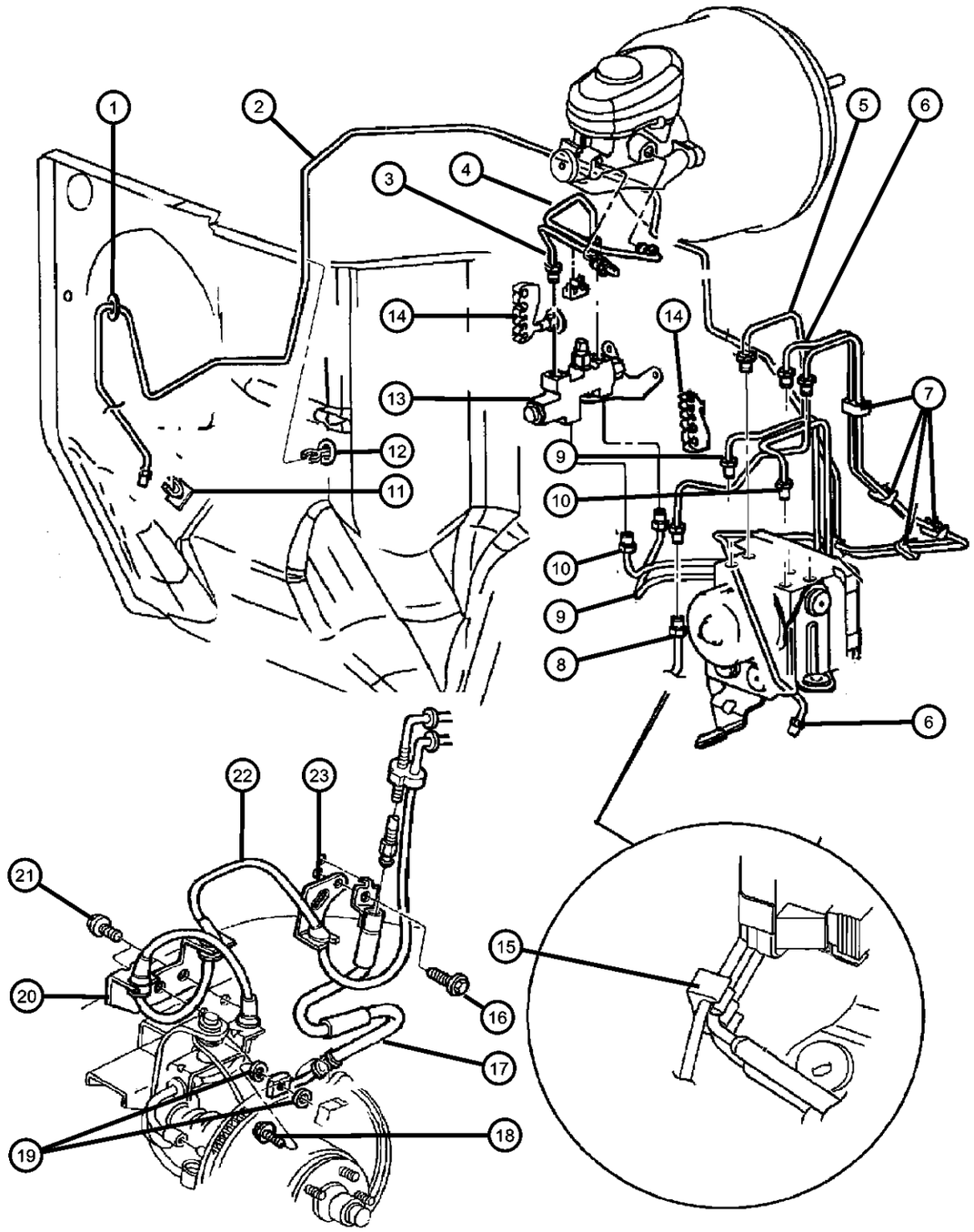

ITEM	PART NUMBER	QTY	LINE	SERIES	BODY	ENGINE	TRANS	TRIM	DESCRIPTION
1	52127966	1							CLIP, Brake Line
2									TUBE, Brake
	52009072AB	1	J, T						HCU to Brake Hose, Right
	52009078AB	1	B, U						HCU to Brake Hose, Right
3	52009074	1							TUBE, Brake, Master Cylinder to Proportioning Valve, Secondary
4	52009069	1							TUBE, Brake, Master Cylinder to Proportioning Valve, Primary
5	52009146	1							TUBE, Brake, HCU to Union, Rear
6									TUBE, Brake
	52009073	1	J, T						HCU to Brake Hose, Left
	52009079AB	1	B, U						HCU to Brake Hose, Left
7									CLIP, Brake Line
	52008940	5	B, U						2 Way, Mounting
		5	J, T						2 Way, Mounting
8	52127967	1							TUBE, Brake, Union to Brake Hose, Rear
9									TUBE, Brake
	52009067	1	J, T						Proportioning Valve to HCU, Primary
	52009075AB	1	B, U						Proportioning Valve to HCU, Primary
10									TUBE, Brake
	52009068	1	J, T						Proportioning Valve to HCU, Secondary
	52009076AC	1	B, U						Proportioning Valve to HCU, Secondary
11	52009234	1							CLIP, Brake/Fuel Line, 1 Way, Mounting
12	52128157	1	J, T						CLIP, Brake LineMounting
13									VALVE, Proportioning
	52008549	1							
	52128035	1	J, T						
14									CLIP, Five Way
	52128060	3	B, U						Mounting
		2	J, T						Mounting
15									CLIP, Brake Line
	52009163	1	J, T						Mounting

CHEROKEE (XJ)

SERIES	LINE	BODY	ENGINE	TRANSMISSION
L = LOWLINE	T = JEEP - 2WD B = JEEP - 2WD (RHD) J = JEEP - 4WD U = JEEP - 4WD (RHD)	72 = SPORT UTILITY 2-DR 74 = SPORT UTILITY 4-DR	ENC = 2.5L 4 Cyl Turbo Diesel Engine EPB = 2.5L 4 Cylinder Engine EPE = Engine - 2.5L Power Tech I-4 Cyl. ERH = 4.0L Power Tech I-6 Engine	DDQ = 5-Speed Manual Transmission DGS = 4-Speed Automatic AW4 Transmission DGO = ALL AUTOMATIC TRANSMISSIONS DBB = ALL MANUAL TRANSMISSIONS

Brake Lines,Front,LHD,RHD,With Anti-Lock Brakes
Figure 5-530

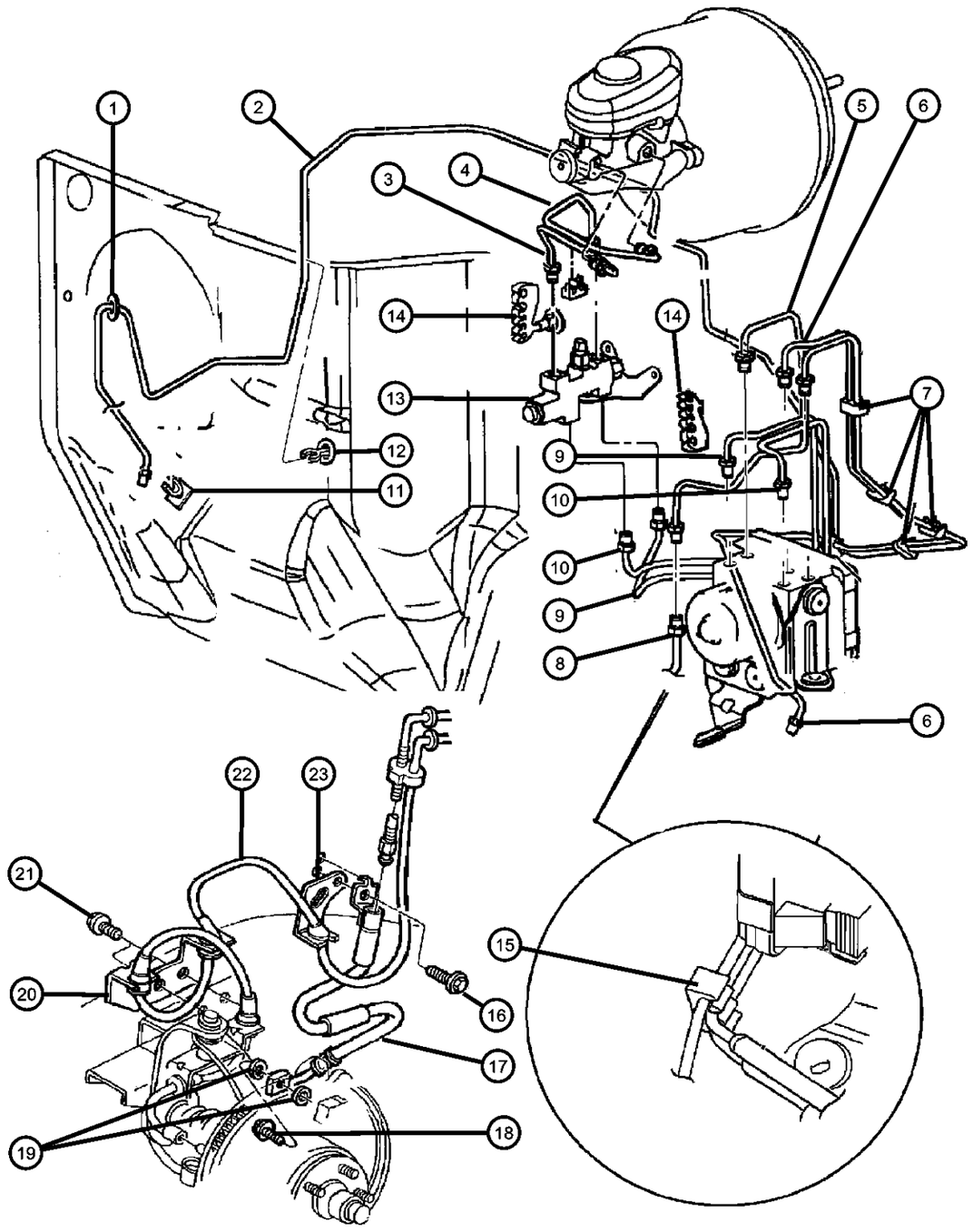

ITEM	PART NUMBER	QTY	LINE	SERIES	BODY	ENGINE	TRANS	TRIM	DESCRIPTION
		7	B, U						Mounting
16	06502711	2							BOLT, Brake Hose to Wheelhouse, Mounting
17									HOSE, Brake
	52008674	1							Right
	52008675	1							Left
18	J4006700	2							BOLT, Banjo, Hose to Caliper, Mounting
19	J3237672	4							GASKET, Brake Hose To CaliperMounting
20									BRACKET, Brake Sensor
	56026996	1							Right
	56026997	1							Left
21	34201912	4							SCREW, Self Tapping, M6x1x14
22									SENSOR, Anti-Lock Brakes
	56005217	2	B						
		2	J						
		2	T						
		2	U						
23									BRACKET, ABS Sensor
	56026836	1							Right
	56026837	1							Left

CHEROKEE (XJ)

SERIES	LINE	BODY	ENGINE	TRANSMISSION
L = LOWLINE	T = JEEP - 2WD B = JEEP - 2WD (RHD) J = JEEP - 4WD U = JEEP - 4WD (RHD)	72 = SPORT UTILITY 2-DR 74 = SPORT UTILITY 4-DR	ENC = 2.5L 4 Cyl Turbo Diesel Engine EPB = 2.5L 4 Cylinder Engine EPE = Engine - 2.5L Power Tech I-4 Cyl. ERH = 4.0L Power Tech I-6 Engine	DDQ = 5-Speed Manual Transmission DGS = 4-Speed Automatic AW4 Transmission DGO = ALL AUTOMATIC TRANSMISSIONS DBB = ALL MANUAL TRANSMISSIONS

Brake Lines and Hoses,Rear
Figure 5-540

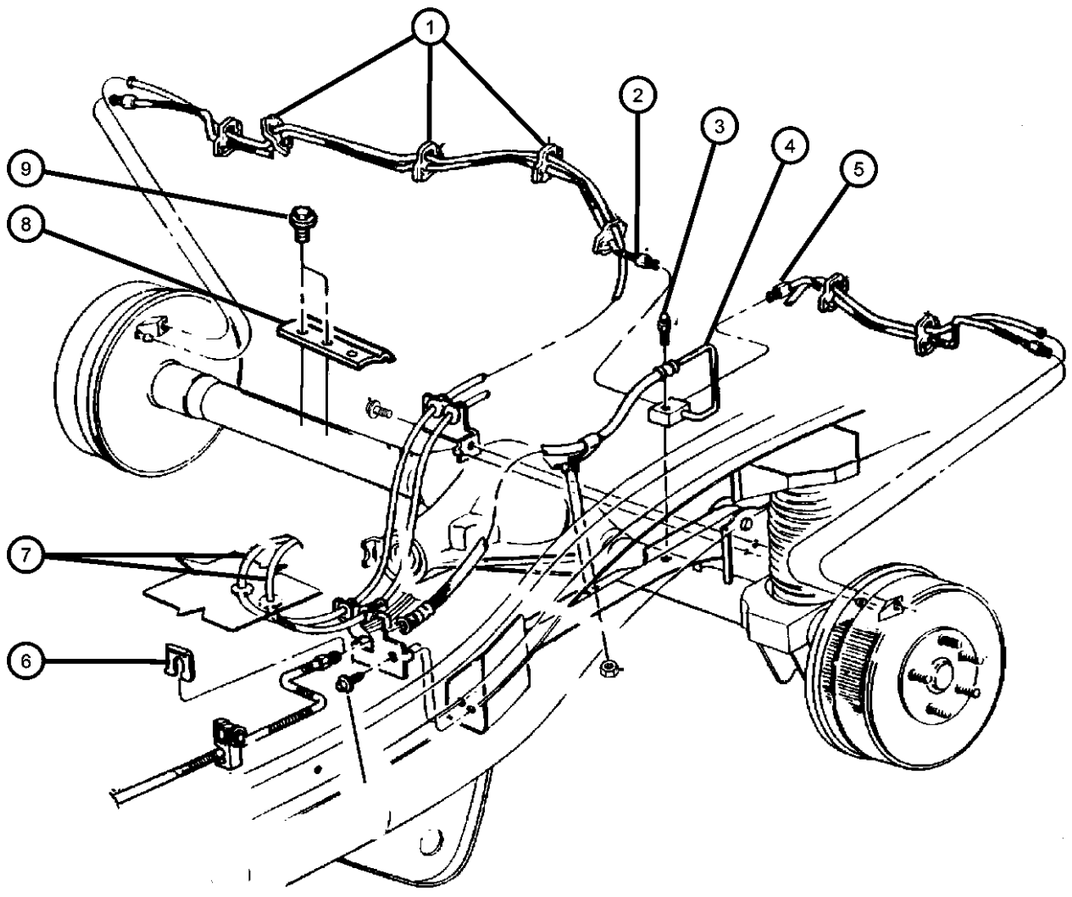

ITEM	PART NUMBER	QTY	LINE	SERIES	BODY	ENGINE	TRANS	TRIM	DESCRIPTION

Note:Sales Codes:
[AHB]=Police Group
[DRA]=Axle - Rear,Corporate 8.25
[DRJ]=Axle - Rear,Dana M35/194MM
[DRM]=Axle - Rear,Dana 35C/194MM

1	56026775	10	CLIP, Tube To Speed Sensor
2			TUBE, Brake
	52128264	1	[DRJ,DRM,AHB], Right
	52129022	1	[DRA], Right
	52130024	1	[DRJ,DRM], Right
3	52067508	1	BOLT, Axle Vent
4	52007562	1	HOSE, BrakeRear
5			TUBE, Brake
	52128265	1	[DRJ,DRM,AHB], Left
	52129023	1	[DRA], Left
	52130025	1	[DRJ,DRM], Left
6	02208893	1	LOCK, Brake Hose
7			SENSOR, Anti-Lock Brakes
	52005932	1	Right
	52005933	1	Left
8	52007800	1	CLIP, Brake Tube
9	34201912	4	SCREW, Self Tapping, M6x1x14

CHEROKEE (XJ)

SERIES	LINE	BODY	ENGINE	TRANSMISSION
L = LOWLINE	T = JEEP - 2WD B = JEEP - 2WD (RHD) J = JEEP - 4WD U = JEEP - 4WD (RHD)	72 = SPORT UTILITY 2-DR 74 = SPORT UTILITY 4-DR	ENC = 2.5L 4 Cyl Turbo Diesel Engine EPB = 2.5L 4 Cylinder Engine EPE = Engine - 2.5L Power Tech I-4 Cyl. ERH = 4.0L Power Tech I-6 Engine	DDQ = 5-Speed Manual Transmission DGS = 4-Speed Automatic AW4 Transmission DGO = ALL AUTOMATIC TRANSMISSIONS DBB = ALL MANUAL TRANSMISSIONS

Brake Pedal
Figure 5-610

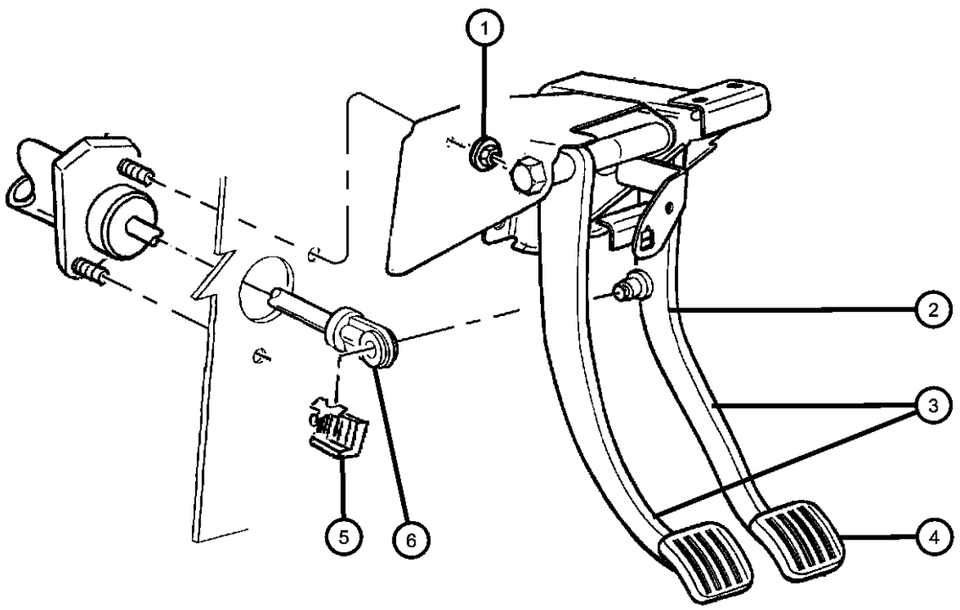

ITEM	PART NUMBER	QTY	LINE	SERIES	BODY	ENGINE	TRANS	TRIM	DESCRIPTION
Note:DBB= All Manual Transmissions—DG0=All Automatic Transmissions									
1	J4003909	2							NUT, Hex Flange With Serration
2									PEDAL, Brake
	52078848AB	1	B, U						[DG0]
	52129061AC	1	J, T						[DG0]
3									PEDAL, Brake And Clutch
	52079254AB	1	B, U						[DBB]
	52128075AB	1	J, T						[DBB]
4									PAD, Pedal
	52002750	1	J, T						[DBB]
		1	B, U						[DBB]
	52078540	1	J, T						[DG0]
		1	B, U						[DG0]
5	06035334	1							CLIP, Brake Push Rod
6	04446361	1							BUSHING, Hydraulic Clutch Actuator, Brake Booster Push Rod

CHEROKEE (XJ)

SERIES	LINE	BODY	ENGINE	TRANSMISSION
L = LOWLINE	T = JEEP - 2WD B = JEEP - 2WD (RHD) J = JEEP - 4WD U = JEEP - 4WD (RHD)	72 = SPORT UTILITY 2-DR 74 = SPORT UTILITY 4-DR	ENC = 2.5L 4 Cyl Turbo Diesel Engine EPB = 2.5L 4 Cylinder Engine EPE = Engine - 2.5L Power Tech I-4 Cyl. ERH = 4.0L Power Tech I-6 Engine	DDQ = 5-Speed Manual Transmission DGS = 4-Speed Automatic AW4 Transmission DGO = ALL AUTOMATIC TRANSMISSIONS DBB = ALL MANUAL TRANSMISSIONS

Group - 6

Clutch

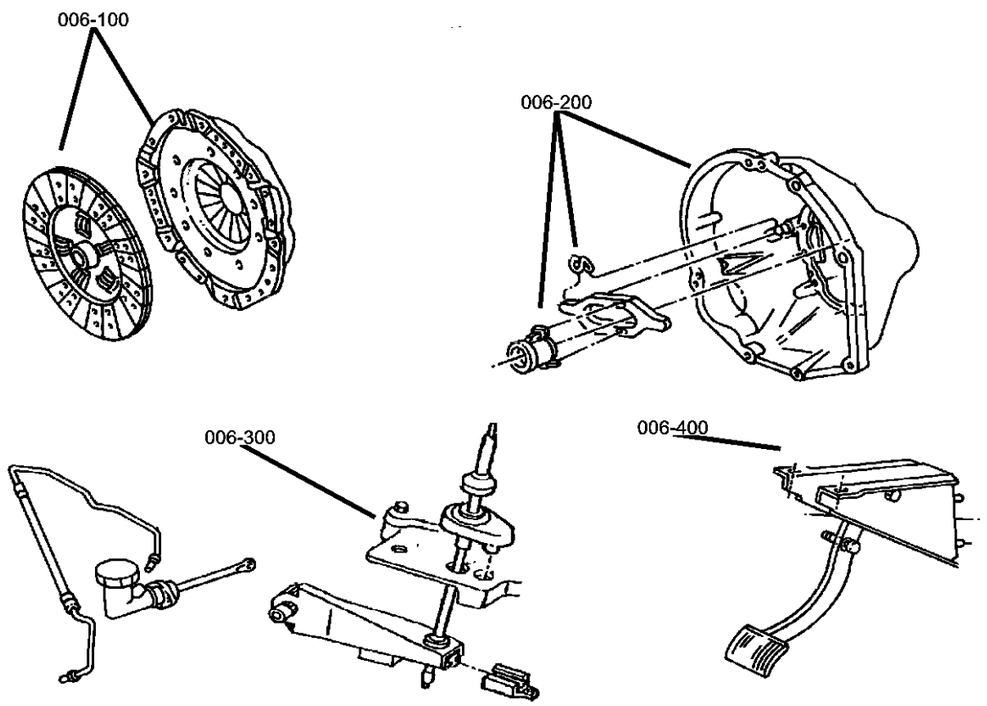

006-100 Clutch	006-200 Clutch Housing	006-300 Clutch Controls	006-400 Clutch Pedals
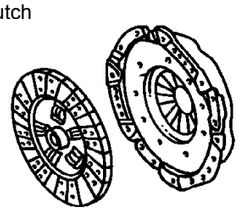	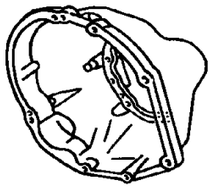	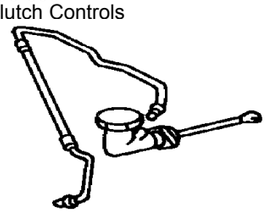	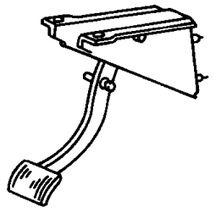

Group - 6 Clutch

Illustration Title — Group-Fig. No.

Clutch
Clutch Assembly ..... Fig. 6 - 110

Clutch Housing
Clutch Housing and Pan ..... Fig. 6 - 210

Clutch Controls
Controls,Hydraulic Clutch ..... Fig. 6 - 310

Clutch Pedals
Pedal,Clutch ..... Fig. 6 - 410

Clutch Assembly
Figure 6-110

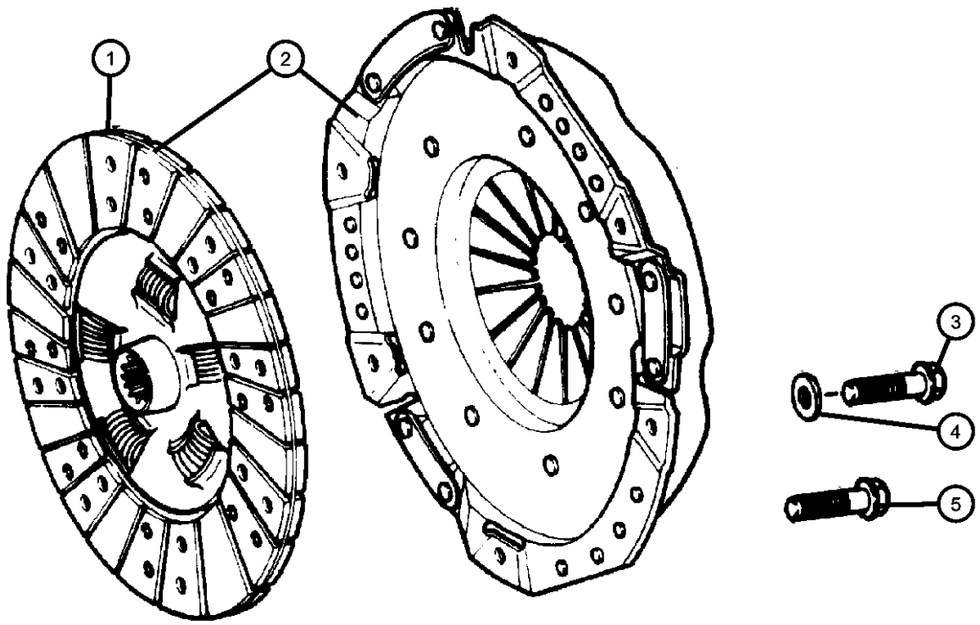

ITEM	PART NUMBER	QTY	LINE	SERIES	BODY	ENGINE	TRANS	TRIM	DESCRIPTION
Notes:Sales Codes: [DBB]=All Manual Transmissions [DDQ]=5 Speed Manual Transmission [EN0]=All Turbo Diesel Engines [EP0]=All 2.5L 4 Cylinder Gas Engines [ER0]=All V6 Engines									
1									DISC, Clutch
	52104044	1				EN0	DBB		
	53008259	1				ER0	DDQ		
2									CLUTCH KIT, Pressure Plate and Disc
	04864835	1				EN0	DBB		
	04874175	1				ER0	DDQ		
	52107570	1				EP0	DBB		
3	34201373	6				EP0	DBB		BOLT, Hex Head, M8x1.25x22, Pressure Plate to Flywheel, Mounting
4	11500221	6				EP0	DBB		WASHER, Flat, Pressure Plate to Flywheel, Mounting
5									BOLT, Hex Flange Head
	06035626	6				ER0	DBB		Pressure Plate to Flywheel, Mounting
		6				EN0	DBB		Pressure Plate to Flywheel, Mounting

CHEROKEE (XJ)

SERIES	LINE	BODY	ENGINE	TRANSMISSION
L = LOWLINE	T = JEEP - 2WD B = JEEP - 2WD (RHD) J = JEEP - 4WD U = JEEP - 4WD (RHD)	72 = SPORT UTILITY 2-DR 74 = SPORT UTILITY 4-DR	ENC = 2.5L 4 Cyl Turbo Diesel Engine EPB = 2.5L 4 Cylinder Engine EPE = Engine - 2.5L Power Tech I-4 Cyl. ERH = 4.0L Power Tech I-6 Engine	DDQ = 5-Speed Manual Transmission DGS = 4-Speed Automatic AW4 Transmission DGO = ALL AUTOMATIC TRANSMISSIONS DBB = ALL MANUAL TRANSMISSIONS

Clutch Housing and Pan
Figure 6-210

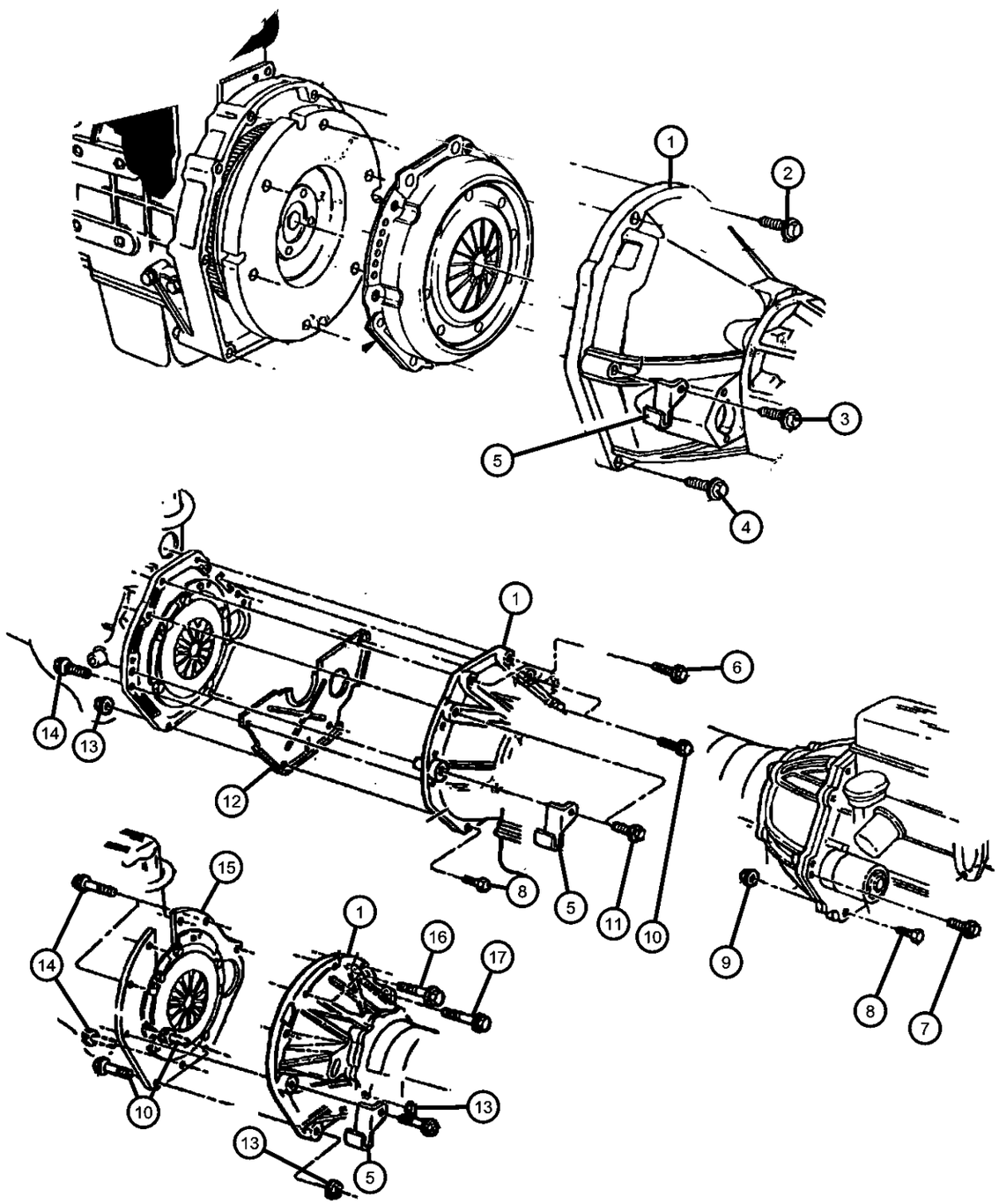

ITEM	PART NUMBER	QTY	LINE	SERIES	BODY	ENGINE	TRANS	TRIM	DESCRIPTION
Notes:Sales Codes:									
[DBB]=All Manual Transmissions									
[DDQ]=5 Speed Manual Transmission									
[EN0]=All Turbo Diesel Engines									
[EP0]=All 2.5L 4 Cylinder Gas Engines									
[ER0]=All V6 Engines									
1									HOUSING, Clutch
	52104000	1				EP0	DBB		
	52107552	1				EN0, ER0	DBB		
2	06034795	2				EN0	DBB		SCREW, Hex Head, .375-16x2.00, Clutch Housing to Spacer Plate, Mounting
3	06034795	2							SCREW, Hex Flange Head, (NOT SERVICED)
4	06100952	2				EN0	DBB		SCREW, Hex Head, M12-1.75x55, Clutch Housing to Spacer Plate, Mounting
5	52107595	1					DBB		BRACKET, Clutch TubeMounting
6	06100345	2				EP0	DBB		SCREW AND WASHER, Hex Flange Head, M12x1.75x45, Clutch Housing to Engine Block, Mounting
7	11500986	2				EP0	DBB		BOLT, Hex Flange Head, M8x2.12x16, Clutch Housing to Engine Block, Mounting
8	11500986	2							SCREW, Hex Flange Head, M12x1.75x65, (NOT SERVICED)
9	06502697	2				EP0, ER0	DBB		NUT, Hex Flange Lock, M12x1.75, Dust Cover to Clutch Housing, Mounting
10	11504922	2				EP0	DBB		BOLT, Hex Head, M12x1.75x50, Clutch Housing to Engine Block, Mounting
11	34201837	2				EP0	DBB		BOLT, Hex Flange Head, M12x1.75x90, Clutch Housing to Engine Block, Mounting
12	53003382	1				EP0	DBB		SHIELD, Clutch Housing Dust
13	06502697	2				EP0, ER0	DBB		NUT, Hex Flange Lock, M12x1.75, Dust Cover to Clutch Housing, Mounting
14									BOLT, Hex Flange Head, M8x2.12x16
	11500986	2				EP0	DBB		Dust Cover to Clutch Housing, Mounting
		3				ER0	DBB		Spacer to Clutch Housing, Mounting

CHEROKEE (XJ)

SERIES	LINE	BODY	ENGINE	TRANSMISSION
L = LOWLINE	T = JEEP - 2WD B = JEEP - 2WD (RHD) J = JEEP - 4WD U = JEEP - 4WD (RHD)	72 = SPORT UTILITY 2-DR 74 = SPORT UTILITY 4-DR	ENC = 2.5L 4 Cyl Turbo Diesel Engine EPB = 2.5L 4 Cylinder Engine EPE = Engine - 2.5L Power Tech I-4 Cyl. ERH = 4.0L Power Tech I-6 Engine	DDQ = 5-Speed Manual Transmission DGS = 4-Speed Automatic AW4 Transmission DGO = ALL AUTOMATIC TRANSMISSIONS DBB = ALL MANUAL TRANSMISSIONS

Clutch Housing and Pan
Figure 6-210

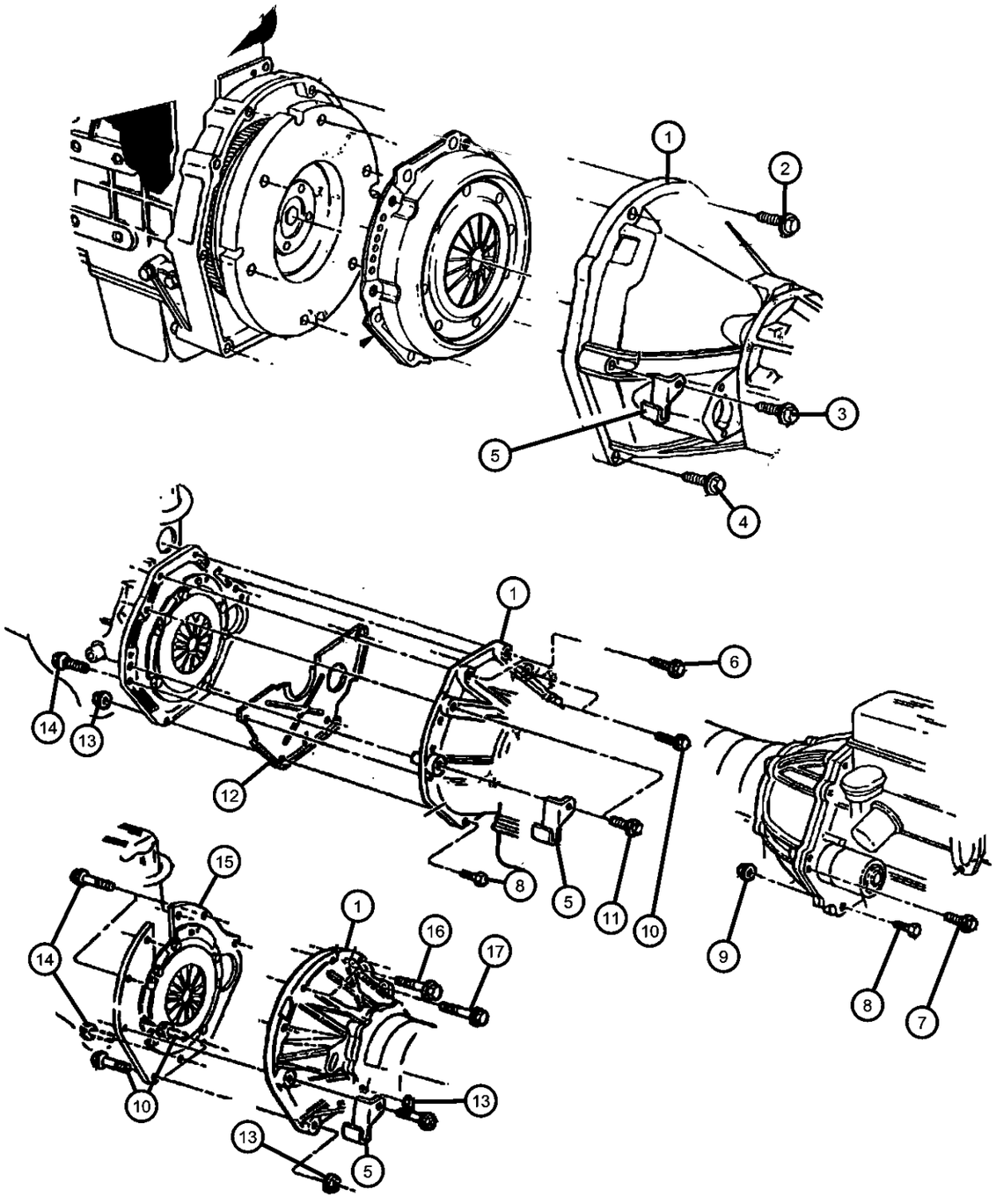

ITEM	PART NUMBER	QTY	LINE	SERIES	BODY	ENGINE	TRANS	TRIM	DESCRIPTION
15	53004473	1				ER0	DBB		SPACER, Clutch Housing
16	J4007389	2				ER0	DBB		BOLT, Torx, Clutch Housing Top to Engine Block, Mounting
17	J4007411	2				ER0	DBB		SCREW, Clutch Housing Bottom to Engine Block, Mounting

CHEROKEE (XJ)

SERIES	LINE	BODY	ENGINE	TRANSMISSION
L = LOWLINE	T = JEEP - 2WD B = JEEP - 2WD (RHD) J = JEEP - 4WD U = JEEP - 4WD (RHD)	72 = SPORT UTILITY 2-DR 74 = SPORT UTILITY 4-DR	ENC = 2.5L 4 Cyl Turbo Diesel Engine EPB = 2.5L 4 Cylinder Engine EPE = Engine - 2.5L Power Tech I-4 Cyl. ERH = 4.0L Power Tech I-6 Engine	DDQ = 5-Speed Manual Transmission DGS = 4-Speed Automatic AW4 Transmission DGO = ALL AUTOMATIC TRANSMISSIONS DBB = ALL MANUAL TRANSMISSIONS

AR = use ase required - = Non illustrrated part

Controls,Hydraulic Clutch
Figure 6-310

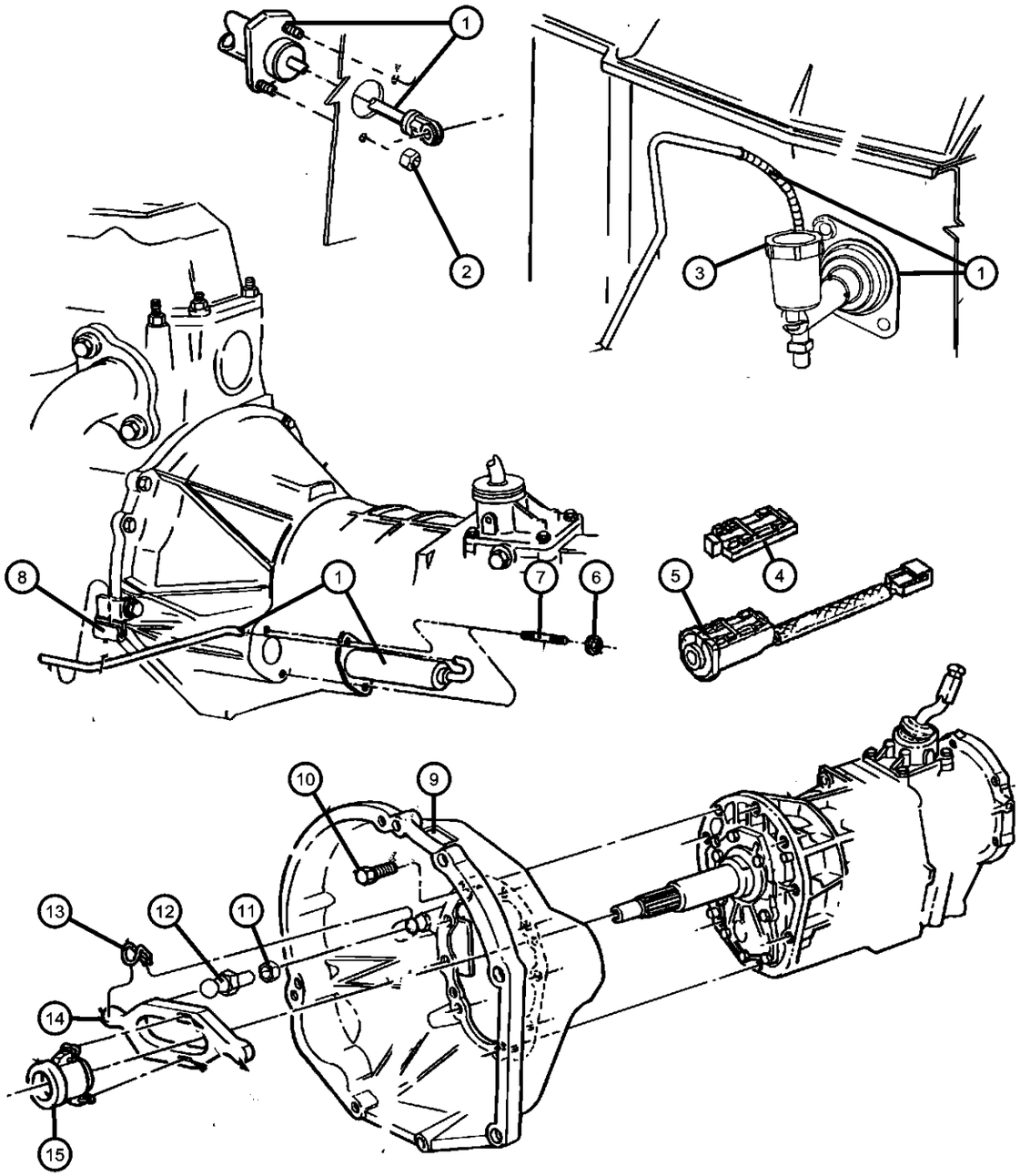

ITEM	PART NUMBER	QTY	LINE	SERIES	BODY	ENGINE	TRANS	TRIM	DESCRIPTION
Notes:Sales Codes: [DBB]=All Manual Transmissions [DDQ]=5 Speed Manual Transmission [EN0]=All Turbo Diesel Engines [EP0]=All 2.5L 4 Cylinder Gas Engines [ER0]=All V6 Engines									
1									HYDRAULIC CONTROL, Clutch Actuator
	52107654	1	J, T				DBB		
	52107655	1	B, U			EP0, ER0	DBB		
	52107657	1	U			EN0	DBB		
2	J4003909	2					DBB		NUT, Hex Flange With Serration, Clutch Master Cylinder to Dash, Mounting
3									CAP, Clutch Reservoir
	04883544AA	1	B, U			EP0, ER0	DBB		
		1	U			EN0	DBB		
		1	J, T				DBB		
4									COVER, Switch
	05015960AA	1	J, T				DBB		
		1	U, B			EP0, ER0	DBB		
		1	U			EN0	DBB		
5									SWITCH, Clutch Starter Interlock
	53007944	1	U			EN0	DBB		
		1	J, T				DBB		
		1	B, U			EP0, ER0	DBB		
6	00152472	2					DBB		NUT, Slave Cylinder to Clutch Housing, Mounting
7	06032878	2					DBB		STUD, .312-18x2.00, Slave Cylinder to Clutch Housing, Mounting
8	52107595	1					DBB		BRACKET, Clutch Tube, Hydraulic Clutch tube, Mounting
9									GROMMET, Timing Probe
	52107589	1				EN0	DBB		
	53006010	1				EP0, ER0	DBB		
10	06503299	9					DDQ		BOLT, Hex Head, Clutch Housing to Transmission, Mounting
11									NUT, .375-16

CHEROKEE (XJ)

SERIES	LINE	BODY	ENGINE	TRANSMISSION
L = LOWLINE	T = JEEP - 2WD B = JEEP - 2WD (RHD) J = JEEP - 4WD U = JEEP - 4WD (RHD)	72 = SPORT UTILITY 2-DR 74 = SPORT UTILITY 4-DR	ENC = 2.5L 4 Cyl Turbo Diesel Engine EPB = 2.5L 4 Cylinder Engine EPE = Engine - 2.5L Power Tech I-4 Cyl. ERH = 4.0L Power Tech I-6 Engine	DDQ = 5-Speed Manual Transmission DGS = 4-Speed Automatic AW4 Transmission DGO = ALL AUTOMATIC TRANSMISSIONS DBB = ALL MANUAL TRANSMISSIONS

Controls,Hydraulic Clutch
Figure 6-310

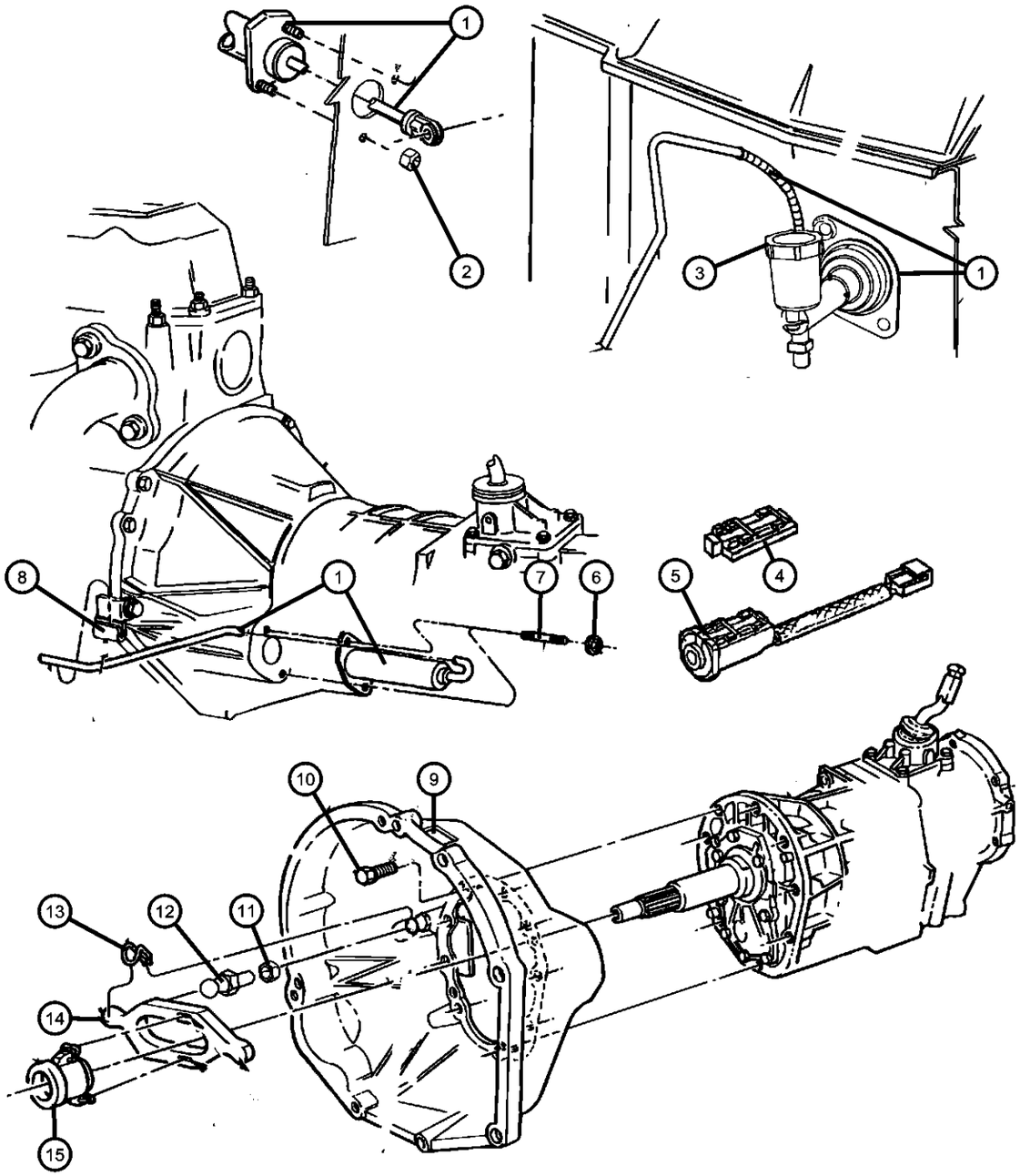

ITEM	PART NUMBER	QTY	LINE	SERIES	BODY	ENGINE	TRANS	TRIM	DESCRIPTION
	00152344	1				EP0	DBB		Clutch Release Pivot, Mounting
		1				EN0, ER0	DBB		Clutch Release Pivot, Mounting
12									PIVOT, Clutch Release
	52087542	1				EP0	DBB		
		1				EN0, ER0	DBB		
13	04338855	1					DBB		SPRING, Clutch Release
14	52107555	1					DBB		LEVER, Clutch Release
15	53008342	1					DBB		BEARING, Clutch Release
-16	34201633	1	J, T			EP0, ER0	DBB		CLIP, Tube, Hydraulic Line to Dash, Mounting
-17									CLIP, Five Way
	52128060	3	B, U						Brake Tube to Dash, Mounting
		2	J, T						Brake Tube to Dash, Mounting

CHEROKEE (XJ)

SERIES	LINE	BODY	ENGINE	TRANSMISSION
L = LOWLINE	T = JEEP - 2WD B = JEEP - 2WD (RHD) J = JEEP - 4WD U = JEEP - 4WD (RHD)	72 = SPORT UTILITY 2-DR 74 = SPORT UTILITY 4-DR	ENC = 2.5L 4 Cyl Turbo Diesel Engine EPB = 2.5L 4 Cylinder Engine EPE = Engine - 2.5L Power Tech I-4 Cyl. ERH = 4.0L Power Tech I-6 Engine	DDQ = 5-Speed Manual Transmission DGS = 4-Speed Automatic AW4 Transmission DGO = ALL AUTOMATIC TRANSMISSIONS DBB = ALL MANUAL TRANSMISSIONS

Pedal,Clutch
Figure 6-410

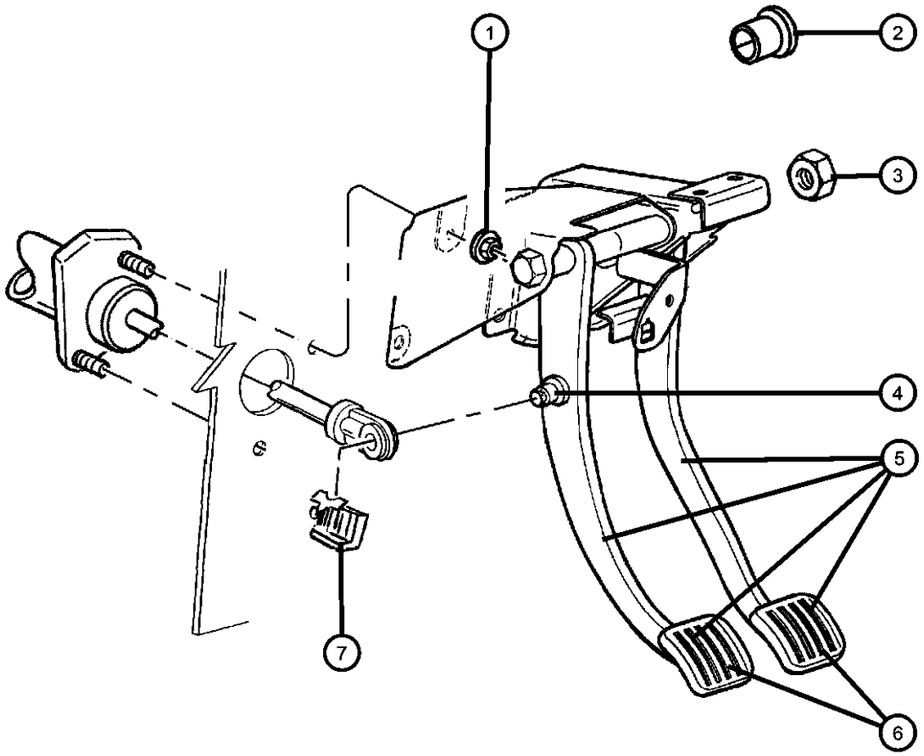

ITEM	PART NUMBER	QTY	LINE	SERIES	BODY	ENGINE	TRANS	TRIM	DESCRIPTION
Notes:Sales Codes:									
[DBB]=All Manual Transmissions									
[DDQ]=5 Speed Manual Transmission									
[EN0]=All Turbo Diesel Engines									
[EP0]=All 2.5L 4 Cylinder Gas Engines									
[ER0]=All V6 Engines									
1	J4003909	2					DBB		NUT, Hex Flange With Serration, Clutch Master Cylinder, Mounting
2	04294639	4					DBB		BUSHING, Clutch and Brake Pedal, Pedal shaft Bolt, Mounting
3	06502585	1					DBB		NUT, Pedal shaft Bolt, Mounting
4	04446361	1							BUSHING, Hydraulic Clutch Actuator, Clutch Master Cylinder Push Rod, Mounting
5									PEDAL, Brake And Clutch
	52079254AB	1	B, U				DBB		
	52128075AB	1	J, T				DBB		
6									PAD, Pedal
	52002750	1	B, U				DBB		Clutch or Brake
		1	J, T				DBB		Clutch or Brake
7	06035334	1							CLIP, Clutch Master Cylinder Push Rod, Mounting

CHEROKEE (XJ)

SERIES	LINE	BODY	ENGINE	TRANSMISSION
L = LOWLINE	T = JEEP - 2WD B = JEEP - 2WD (RHD) J = JEEP - 4WD U = JEEP - 4WD (RHD)	72 = SPORT UTILITY 2-DR 74 = SPORT UTILITY 4-DR	ENC = 2.5L 4 Cyl Turbo Diesel Engine EPB = 2.5L 4 Cylinder Engine EPE = Engine - 2.5L Power Tech I-4 Cyl. ERH = 4.0L Power Tech I-6 Engine	DDQ = 5-Speed Manual Transmission DGS = 4-Speed Automatic AW4 Transmission DGO = ALL AUTOMATIC TRANSMISSIONS DBB = ALL MANUAL TRANSMISSIONS

Group - 7

Cooling

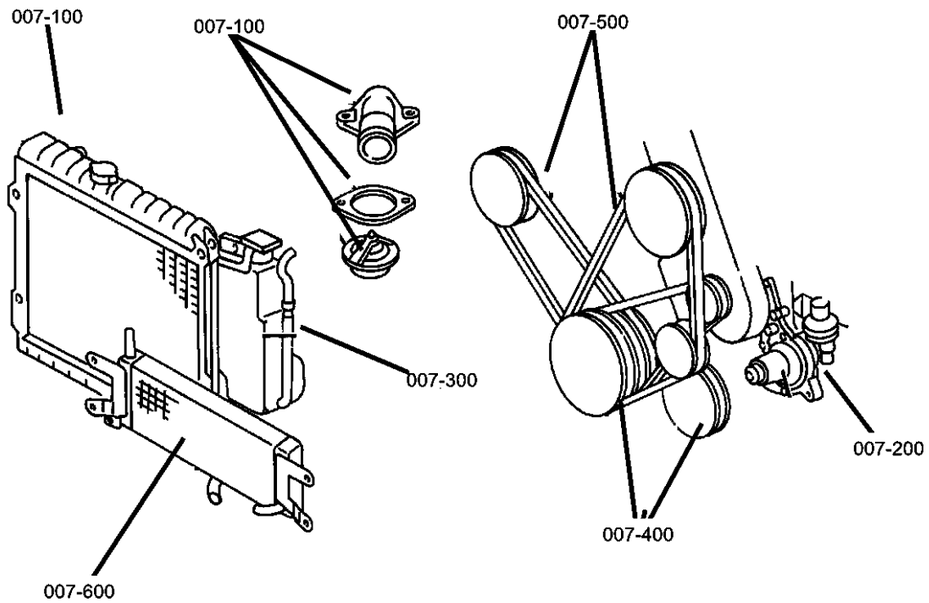

007-100 Radiator and Related Parts 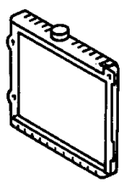	**007-200** Water Pump and Related Parts 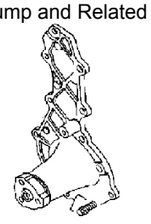	**007-300** Tank, Coolant Engine 	**007-400** Pulleys and Related Parts 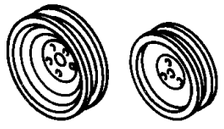
007-500 Drive Belts 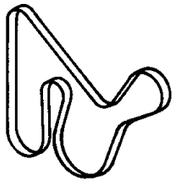	**007-600** Lines, Transmission Oil Cooler 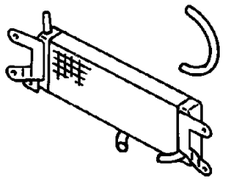	**007-700** Grilles 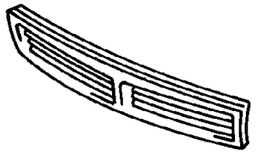	

Group - 7 Cooling

Illustration Title — Group-Fig. No.

Radiator and Related Parts
Radiator and Related Parts 4.0L Engine (ER0) ..... Fig. 7 - 120
Radiator and Related Parts 2.5L Gas Engine (EP0) ..... Fig. 7 - 130
Radiator and Related Parts 2.5L Diesel (EN0) ..... Fig. 7 - 145
Charge Air Cooler ..... Fig. 7 - 147

Water Pump and Related Parts
Water Pump and Related Parts 2.5,4.0L Gas Engines (EP0,ER0) ..... Fig. 7 - 210
Water Pump and Water Manifold 2.5L Diesel Engine (EN0) ..... Fig. 7 - 215

Tank, Coolant Engine
Bottle, Coolant Recovery ..... Fig. 7 - 305
Bottle, Coolant Recovery ..... Fig. 7 - 310

Pulleys and Related Parts
Drive Pulleys, 2.5L Gas Engine (EP0) ..... Fig. 7 - 407
Drive Pulleys, 4.0L Engine (ER0), LHD ..... Fig. 7 - 408
Drive Pulleys, 4.0L Engine (ER0), RHD ..... Fig. 7 - 409
Drive Pulleys, 2.5L Diesel Engine (EN0) ..... Fig. 7 - 415

Drive Belts
Drive Belts ..... Fig. 7 - 510

Lines, Transmission Oil Cooler
Oil Cooler Lines, LHD ..... Fig. 7 - 610
Oil Cooler Lines, RHD ..... Fig. 7 - 620

Grilles
Grille and Related Parts ..... Fig. 7 - 710

Radiator and Related Parts 4.0L Engine (ER0)
Figure 7-120

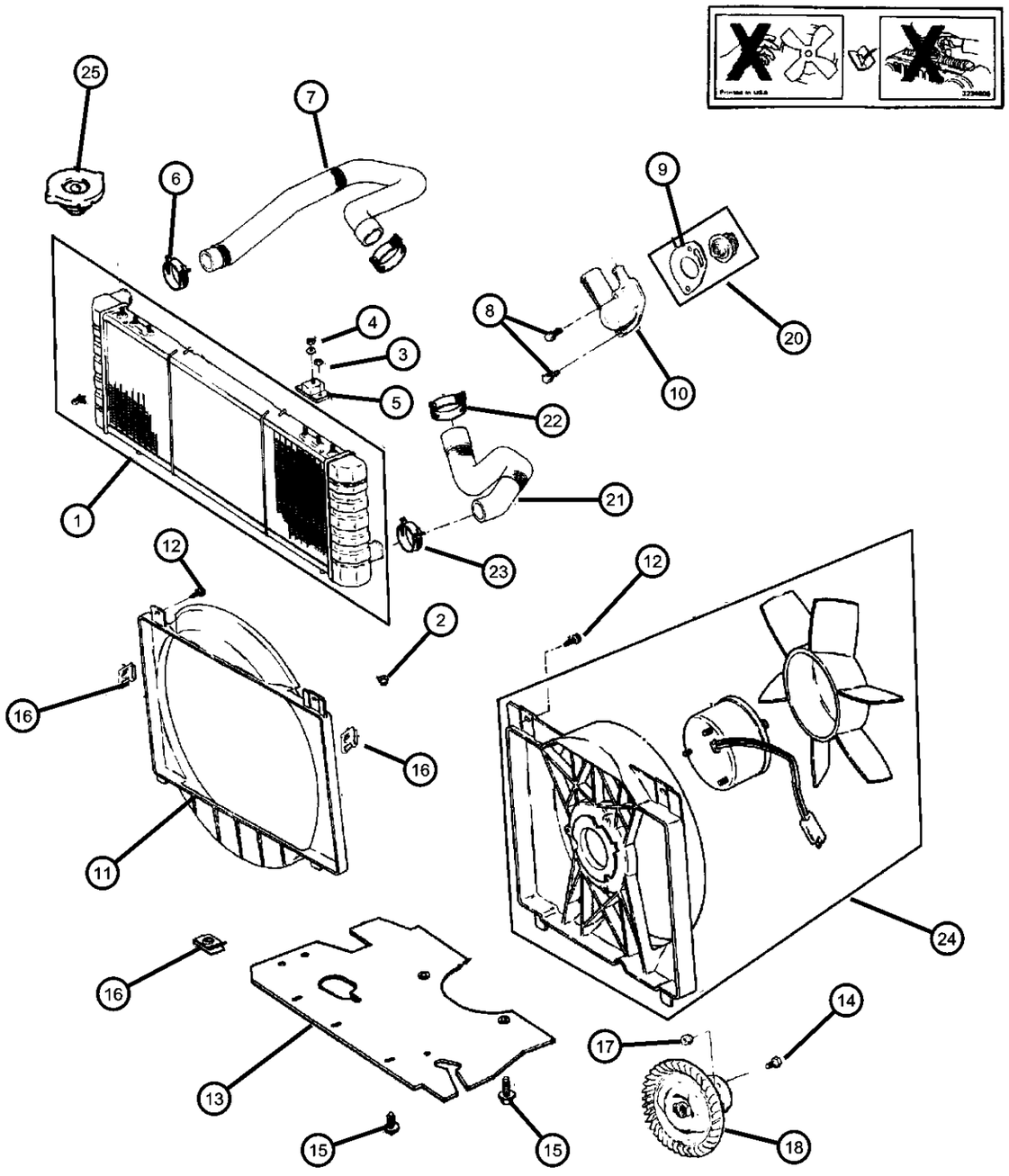

ITEM	PART NUMBER	QTY	LINE	SERIES	BODY	ENGINE	TRANS	TRIM	DESCRIPTION
Note: Sales Code DG0 = All Auto Trans									
Note: Sales Code DGB = Manual Trans									
1									RADIATOR, Engine Cooling
	52028133	1	J, T			ER0	DG0		
		1	J, T			ER0	DBB		
	52028537	1	B, U			ER0	DG0		
	52028544	1	B, U			ER0	DBB		
	52029045	1	J, T			ER0	DG0		w/o Max. Cooling
	52030000	1	J, T			ER0	DBB		w/Max Cooling
2	J0687550	2				EN0, ER0			GROMMET, Radiator
3	11502722	2				ER0			NUT, Hex Flange, M5x.8
4	11503745	2							NUT, Hex, M6x1
5	52002585	2				EN0, ER0			ISOLATOR, Radiator
6	32002983	1				EP0, ER0			CLAMP, Hose, 32mm Black
7	52028286	1				ER0			HOSE, Radiator
8	06034927	1				EP0, ER0			SCREW AND WASHER, Hex Head, .312-18x.970
9	53020547	1				EP0, ER0			GASKET, Thermostat
10	53006192	1				EP0, ER0			HOUSING, Thermostat
11									SHROUD, Fan
	52027501	1	J, T			ER0			
	52028324	1	B, U			ER0			
12	06503722	4				ER0			SCREW
13	55174736	1				EP0, ER0			SHIELD, Engine
14	06034860	4				EP0, ER0			BOLT AND WASHER, Implement Attaching
15	52009234	1							FASTENER, Push Pin
16	11500662	2							NUT, U Type, M10 x 1.50
17	11500662	2							NUT, (NOT SERVICED)
18	52079625	1				ER0			VISCOUS CLUTCH, Fan Drive
-19	52002593	1				ER0			FAN
20	52028186	1				EP0, ER0			THERMOSTAT, 195 Degrees
21									HOSE, Radiator
	52006301	1	J, T			ER0			
	52029635	1	B, U			ER0			

CHEROKEE (XJ)

SERIES	LINE	BODY	ENGINE	TRANSMISSION
L = LOWLINE	T = JEEP - 2WD B = JEEP - 2WD (RHD) J = JEEP - 4WD U = JEEP - 4WD (RHD)	72 = SPORT UTILITY 2-DR 74 = SPORT UTILITY 4-DR	ENC = 2.5L 4 Cyl Turbo Diesel Engine EPB = 2.5L 4 Cylinder Engine EPE = Engine - 2.5L Power Tech I-4 Cyl. ERH = 4.0L Power Tech I-6 Engine	DDQ = 5-Speed Manual Transmission DGS = 4-Speed Automatic AW4 Transmission DGO = ALL AUTOMATIC TRANSMISSIONS DBB = ALL MANUAL TRANSMISSIONS

Radiator and Related Parts 4.0L Engine (ER0)
Figure 7-120

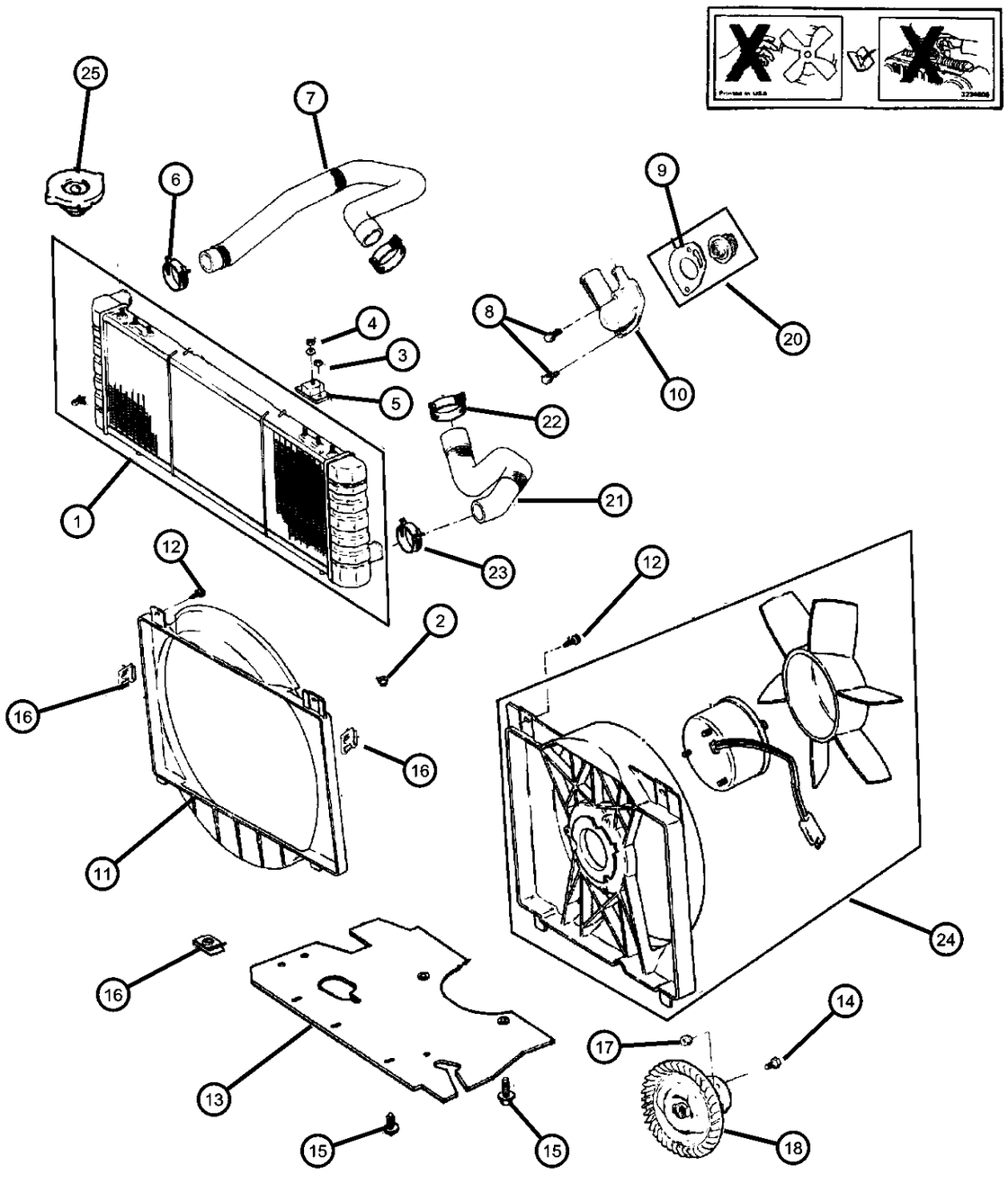

ITEM	PART NUMBER	QTY	LINE	SERIES	BODY	ENGINE	TRANS	TRIM	DESCRIPTION
22	32002366	1				EP0, ER0			CLAMP, Hose, 55mm Black
23	32002366	1				EP0, ER0			CLAMP, Hose, 55mm Black
24									FAN MODULE, Radiator Cooling
	52028337	1	J			ER0			
	52028338	1	J, T			ER0			Middle East
	52028339	1	B, U			ER0			
25									CAP, Radiator
	03781830	1	J, T			ER0	DG0		
		1	J, T			ER0	DBB		
		1	B, U			ER0	DG0		
		1	B, U			ER0	DBB		
-26		1							DRAINCOCK, Radiator, 52028466, (NOT SERVICED)

CHEROKEE (XJ)

SERIES	LINE	BODY	ENGINE	TRANSMISSION
L = LOWLINE	T = JEEP - 2WD B = JEEP - 2WD (RHD) J = JEEP - 4WD U = JEEP - 4WD (RHD)	72 = SPORT UTILITY 2-DR 74 = SPORT UTILITY 4-DR	ENC = 2.5L 4 Cyl Turbo Diesel Engine EPB = 2.5L 4 Cylinder Engine EPE = Engine - 2.5L Power Tech I-4 Cyl. ERH = 4.0L Power Tech I-6 Engine	DDQ = 5-Speed Manual Transmission DGS = 4-Speed Automatic AW4 Transmission DGO = ALL AUTOMATIC TRANSMISSIONS DBB = ALL MANUAL TRANSMISSIONS

Radiator and Related Parts 2.5L Gas Engine (EP0)
Figure 7-130

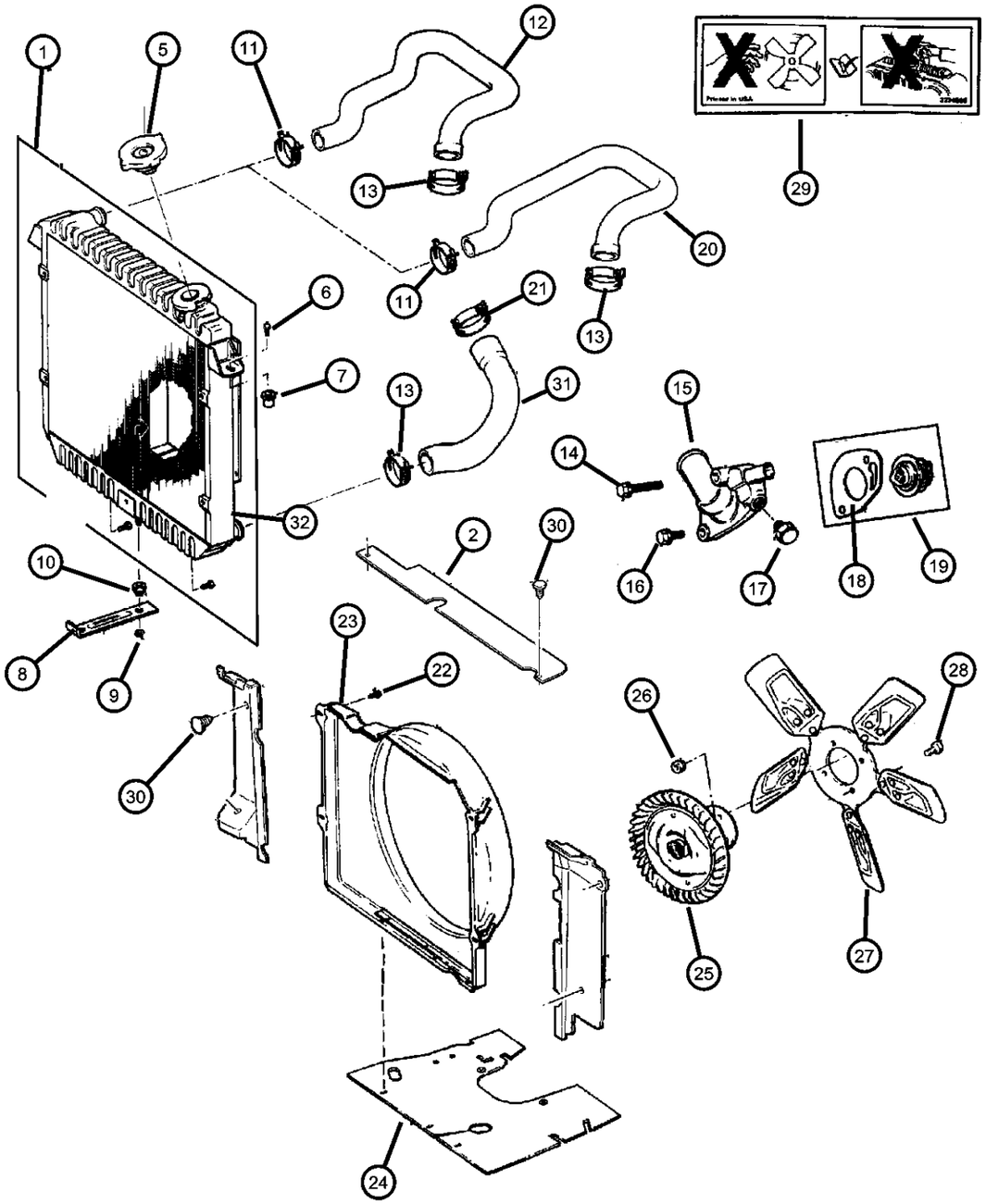

ITEM	PART NUMBER	QTY	LINE	SERIES	BODY	ENGINE	TRANS	TRIM	DESCRIPTION
Note: Sales Code DGB = Manual Trans									
Note: Sales Code DG0 = All Auto Trans									
1									RADIATOR, Engine Cooling
	52029046	1	J, T			EP0	DBB		
	52029047	1	J, T			EP0	DG0		
	52029048AB	1	B, U			EP0	DBB		
2									SEAL, Radiator Crossmember
	52028175	1	J, T			EP0			
	52028176	1	B, U			EP0			
-3									SUPPORT, Radiator
	55009188	1	J, T			EP0			
	55345743	1	B, U			EP0			
-4									CROSSMEMBER, Radiator
	55027533	1	B, U			EP0			
	55345545	1	J, T			EP0, ER0			
5									CAP, Radiator
	03781830	1	B, U			EP0	DBB		
		1	J, T			EP0	DG0		
6	11502628	3				EP0			BOLT, Hex Flange Head, M8x1.25x30
7	34201348	2				EN0, EP0			NUT, Well
8	53000510	1				EP0			BRACE, Radiator
9	34201494	1				EP0			RING, Radiator Grommet
10	53000511	1				EP0			GROMMET, Radiator
11	32002983	1				EP0, ER0			CLAMP, Hose, 32mm Black
12	52028024	1	J			EP0			HOSE, Radiator Inlet, Upper
13	52005580	1				EP0, ER0			CLAMP, Hose to Radiator
14	06034927	1				EP0, ER0			SCREW AND WASHER, Hex Head, .312-18x.970
15	53006192	1				EP0, ER0			HOUSING, Thermostat
16	06034927	1				EP0, ER0			SCREW AND WASHER, Hex Head, .312-18x.970
17	J0103877	1				EP0, ER0			PLUG, Square Head, 1/8-27NPTx.32
18	53020547	1				EP0, ER0			GASKET, Thermostat
19	52028186	1				EP0, ER0			THERMOSTAT, 195 Degrees

CHEROKEE (XJ)

SERIES	LINE	BODY	ENGINE	TRANSMISSION
L = LOWLINE	T = JEEP - 2WD B = JEEP - 2WD (RHD) J = JEEP - 4WD U = JEEP - 4WD (RHD)	72 = SPORT UTILITY 2-DR 74 = SPORT UTILITY 4-DR	ENC = 2.5L 4 Cyl Turbo Diesel Engine EPB = 2.5L 4 Cylinder Engine EPE = Engine - 2.5L Power Tech I-4 Cyl. ERH = 4.0L Power Tech I-6 Engine	DDQ = 5-Speed Manual Transmission DGS = 4-Speed Automatic AW4 Transmission DGO = ALL AUTOMATIC TRANSMISSIONS DBB = ALL MANUAL TRANSMISSIONS

Radiator and Related Parts 2.5L Gas Engine (EP0)
Figure 7-130

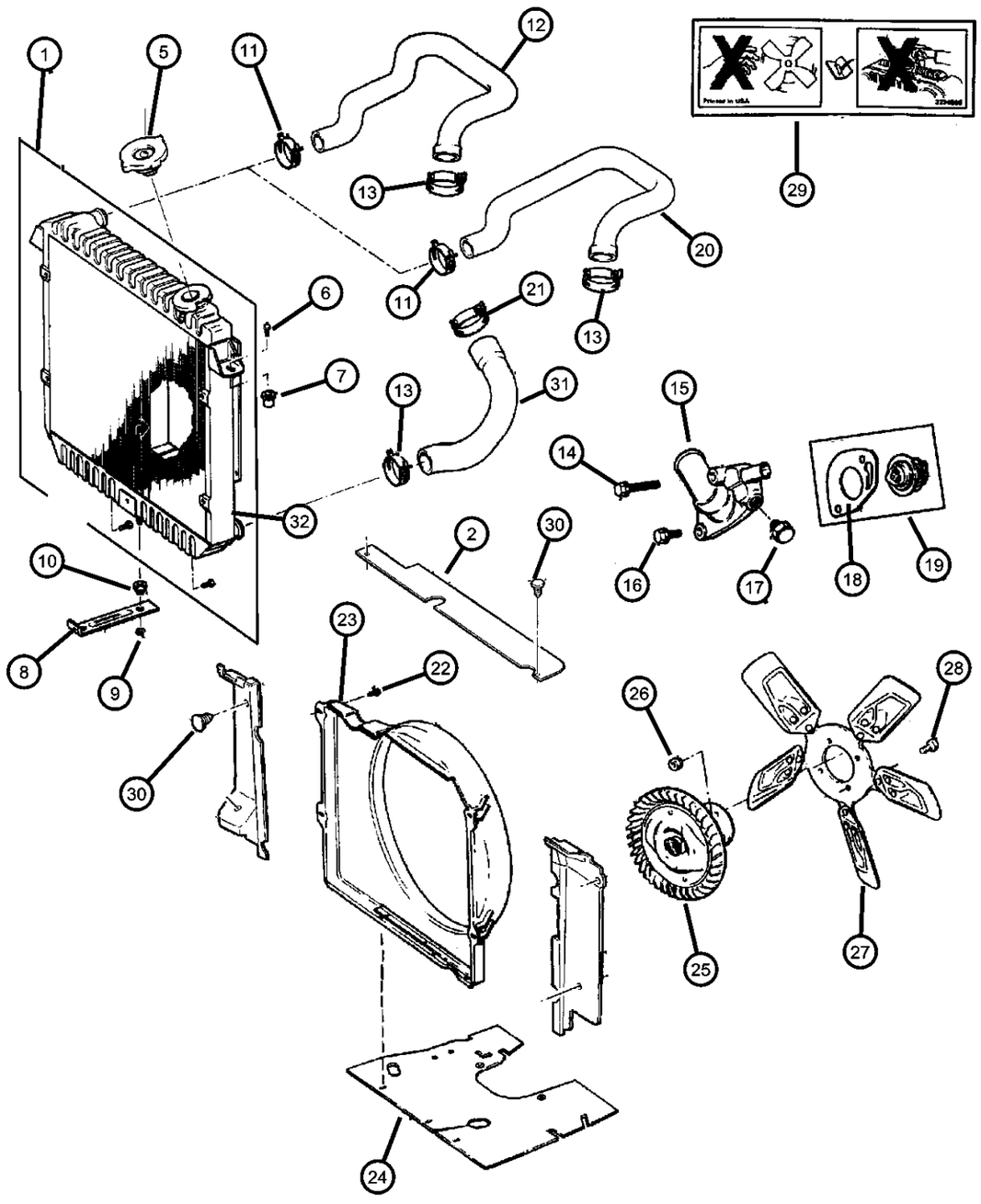

ITEM	PART NUMBER	QTY	LINE	SERIES	BODY	ENGINE	TRANS	TRIM	DESCRIPTION
20	52003789	1	J, T			EP0			HOSE, Radiator Inlet, Upper
21	32002366	1				EP0, ER0			CLAMP, Hose, 55mm Black
22	00154552	3				EP0, ER0			SCREW, Hex Head, .190-16x.625
23									SHROUD, Fan
	52027762	1	J, T			EP0			
	52028148	1	B, U			EP0			
24	55174736	1				EP0, ER0			SHIELD, Engine
25	52028428	1				EP0			VISCOUS CLUTCH, Fan Drive
26									NUT AND WASHER, Hex, .312-18
	00154591	4				EP0, ER0			
	06035051	2				EP0	DGD		
27	52028331	1				EP0			FAN, Cooling
28	06034860	4				EP0, ER0			BOLT AND WASHER, Implement Attaching
29	J3234806	1				ENC, EP0			LABEL, Fan Caution
30	06501477	2				EP0			PIN, Retainer
31	52003790	1	J, T			EP0			HOSE, Radiator To Pump, Lower
32	52003790	1							DRAINCOCK, Radiator, 52028466, (NOT SERVICED)

CHEROKEE (XJ)

SERIES	LINE	BODY	ENGINE	TRANSMISSION
L = LOWLINE	T = JEEP - 2WD B = JEEP - 2WD (RHD) J = JEEP - 4WD U = JEEP - 4WD (RHD)	72 = SPORT UTILITY 2-DR 74 = SPORT UTILITY 4-DR	ENC = 2.5L 4 Cyl Turbo Diesel Engine EPB = 2.5L 4 Cylinder Engine EPE = Engine - 2.5L Power Tech I-4 Cyl. ERH = 4.0L Power Tech I-6 Engine	DDQ = 5-Speed Manual Transmission DGS = 4-Speed Automatic AW4 Transmission DGO = ALL AUTOMATIC TRANSMISSIONS DBB = ALL MANUAL TRANSMISSIONS

Radiator and Related Parts 2.5L Diesel (EN0)
Figure 7-145

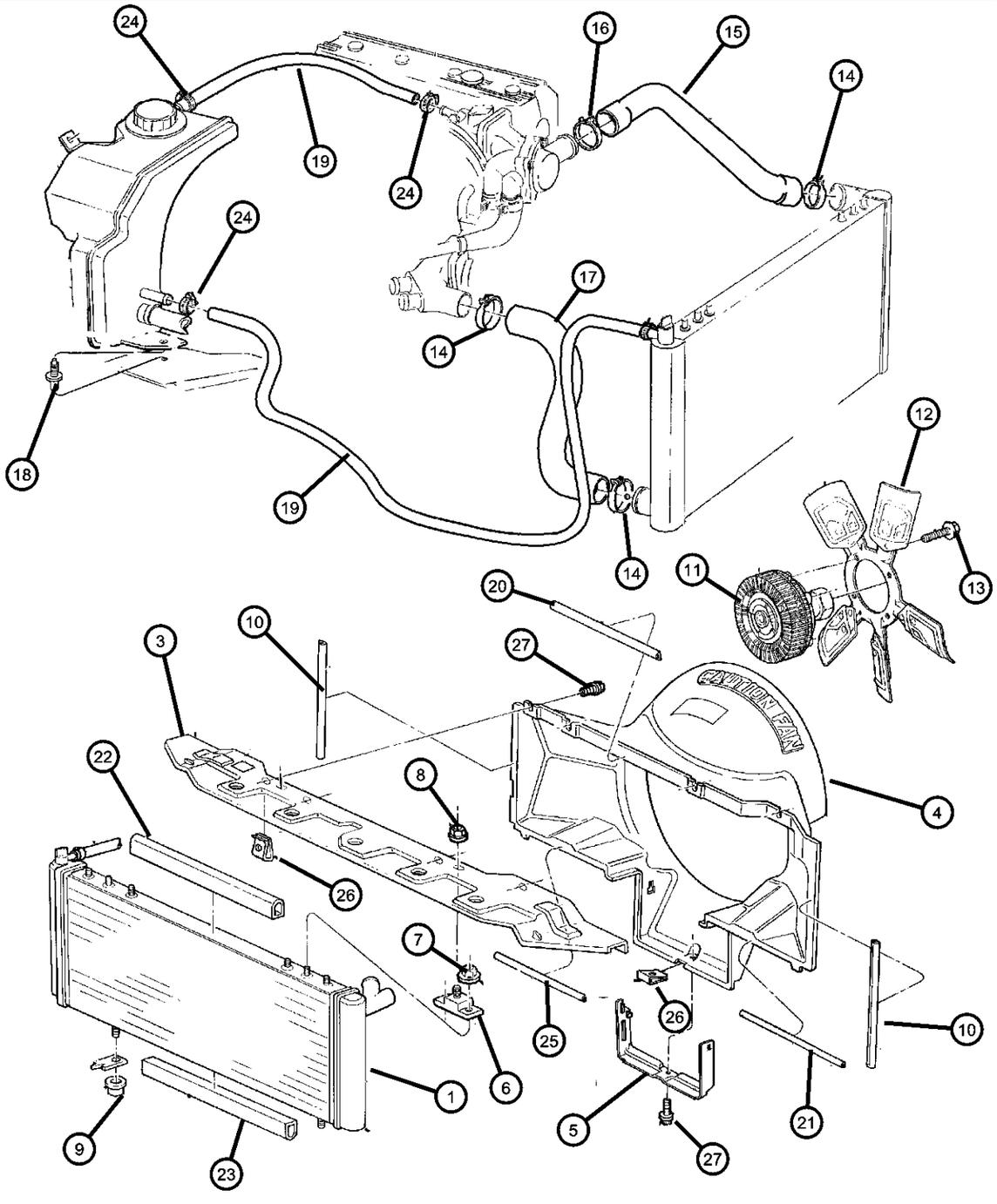

ITEM	PART NUMBER	QTY	LINE	SERIES	BODY	ENGINE	TRANS	TRIM	DESCRIPTION
Note: Sales Code DGB = Manual Trans									
Note: Sales Code DG0 = All Auto Trans									
1									RADIATOR, Engine Cooling
	04874198	1				EN0			w/Max Cooling
	52029100	1				EN0			w/o Max Cooling
-2	52028256	1				EN0	DD0		CAP, Radiator
3	55235830AA	1				EN0, ER0			CROSSMEMBER, Radiator
4	52028406	1				EN0			SHROUD, Fan
5	52028239	1				EN0			SEAL, Radiator
6	52002585	2				EN0, ER0			ISOLATOR, Radiator
7	11502722	4				EN0, ER0			NUT, Hex Flange, M5x.8
8	11503745	2				EN0			NUT, Hex, M6x1
9	J0687550	2				EN0, ER0			GROMMET, Radiator
10	52028230	2				EN0			SEAL, Radiator Shroud
11	52028370	1				EN0			DRIVE, Fan
12	52028200	1				EN0			FAN, Cooling
13	06034860	4				EN0			BOLT AND WASHER, Implement Attaching
14	52005580	1				EN0			CLAMP, Radiator, 55mm Silver
15	52079690	1				EN0			HOSE, Radiator Inlet
16	32002983	1				EN0			CLAMP, Hose, 32mm Black
17									HOSE, Radiator
	52006301	1	J, T			ER0			
	52006499	1	B, U			EP0			
18	06032824	1				EN0			BOLT, Hex Flange Head, .25-14x.625
19	52079457	1				EN0			HOSE, Coolant Recovery Bottle
20	52028234	1				EN0			SEAL, Radiator ShroudUpper
21	52028216	1				EN0			SEAL, Radiator ShroudLower
22	52028179	1				EP0			SEAL, Crossmember
23	52028237	1				EN0			SEAL, Crossmember
24	06502081	1				EN0			CLAMP, Oil Cooler Line
25	52028223	1				EN0			SEAL, Radiator Shroud
26	06503998	5				EN0			NUT, U Multi Thread, M5 x .80

CHEROKEE (XJ)

SERIES	LINE	BODY	ENGINE	TRANSMISSION
L = LOWLINE	T = JEEP - 2WD B = JEEP - 2WD (RHD) J = JEEP - 4WD U = JEEP - 4WD (RHD)	72 = SPORT UTILITY 2-DR 74 = SPORT UTILITY 4-DR	ENC = 2.5L 4 Cyl Turbo Diesel Engine EPB = 2.5L 4 Cylinder Engine EPE = Engine - 2.5L Power Tech I-4 Cyl. ERH = 4.0L Power Tech I-6 Engine	DDQ = 5-Speed Manual Transmission DGS = 4-Speed Automatic AW4 Transmission DGO = ALL AUTOMATIC TRANSMISSIONS DBB = ALL MANUAL TRANSMISSIONS

Radiator and Related Parts 2.5L Diesel (EN0)
Figure 7-145

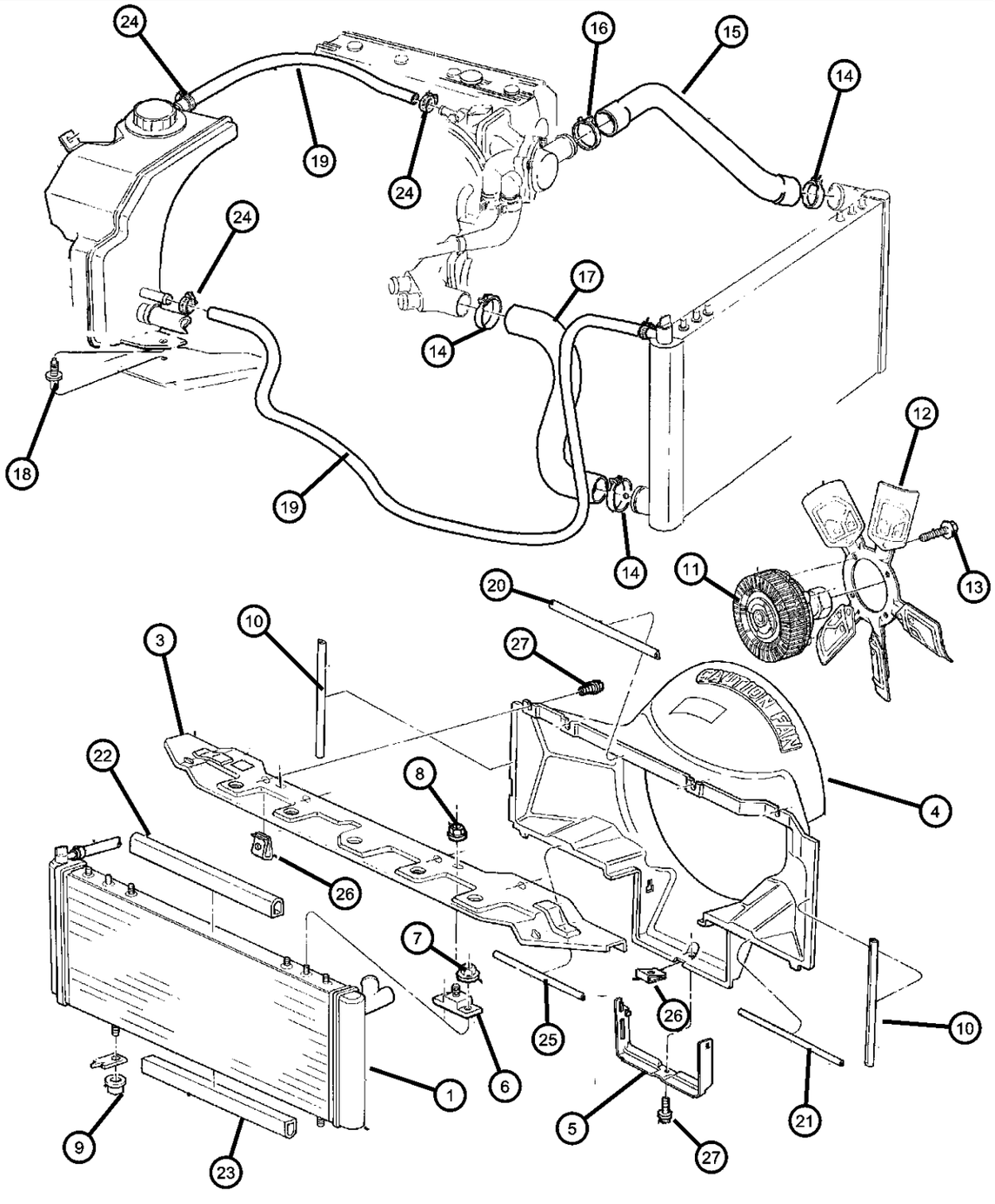

ITEM	PART NUMBER	QTY	LINE	SERIES	BODY	ENGINE	TRANS	TRIM	DESCRIPTION
27	06503998	5							SCREW, (NOT SERVICED)
-28	52079580	1				EN0	DD0		HOSE, Coolant Tank To Pump

CHEROKEE (XJ)

SERIES	LINE	BODY	ENGINE	TRANSMISSION
L = LOWLINE	T = JEEP - 2WD B = JEEP - 2WD (RHD) J = JEEP - 4WD U = JEEP - 4WD (RHD)	72 = SPORT UTILITY 2-DR 74 = SPORT UTILITY 4-DR	ENC = 2.5L 4 Cyl Turbo Diesel Engine EPB = 2.5L 4 Cylinder Engine EPE = Engine - 2.5L Power Tech I-4 Cyl. ERH = 4.0L Power Tech I-6 Engine	DDQ = 5-Speed Manual Transmission DGS = 4-Speed Automatic AW4 Transmission DGO = ALL AUTOMATIC TRANSMISSIONS DBB = ALL MANUAL TRANSMISSIONS

Charge Air Cooler
Figure 7-147

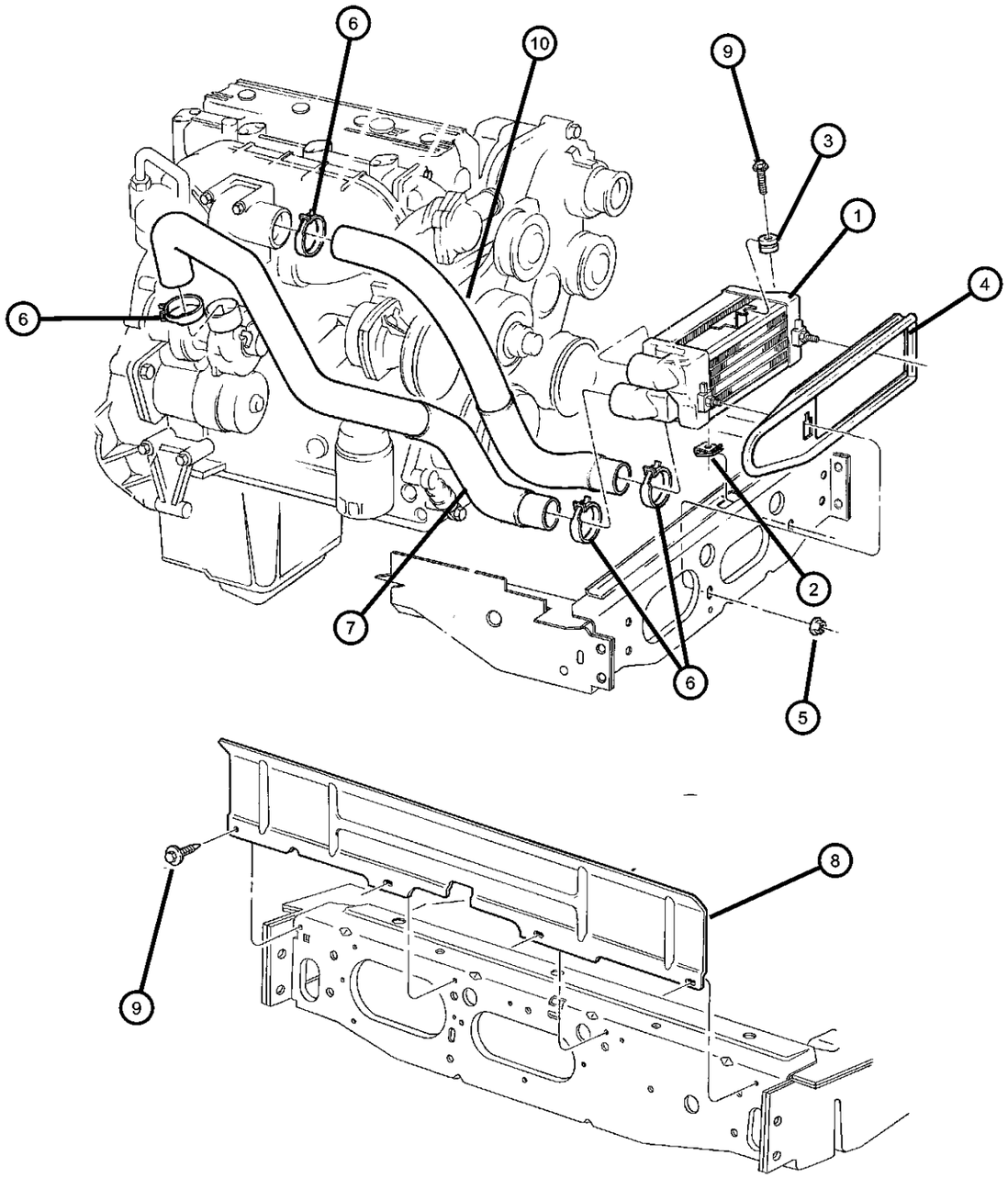

ITEM	PART NUMBER	QTY	LINE	SERIES	BODY	ENGINE	TRANS	TRIM	DESCRIPTION
Note: Sales Code EN0 = 2.5L Diesel Engine									
1	52028089	1				EN0			COOLER, Engine Oil
2	06101442	1				EN0			U-NUT, M6 x 1.00, M6x1.00
3	52028236	1				EN0			ISOLATOR
4	52028235	1				EN0			SEAL, Cooler
5	34201358	2							NUT AND WASHER, Hex Nut-Sealing Washer, M6 x 1.00
6	52028008	2				EN0			CLAMP, Hose, 64mm
7	52079581	1				EN0			HOSE, Charge Air Cooler
8	52028374	1				EN0			DEFLECTOR, Air
9	52028374	1							SCREW, (NOT SERVICED)
10	52079496	1				EN0			HOSE, Charge Air Cooler

CHEROKEE (XJ)

SERIES	LINE	BODY	ENGINE	TRANSMISSION
L = LOWLINE	T = JEEP - 2WD B = JEEP - 2WD (RHD) J = JEEP - 4WD U = JEEP - 4WD (RHD)	72 = SPORT UTILITY 2-DR 74 = SPORT UTILITY 4-DR	ENC = 2.5L 4 Cyl Turbo Diesel Engine EPB = 2.5L 4 Cylinder Engine EPE = Engine - 2.5L Power Tech I-4 Cyl. ERH = 4.0L Power Tech I-6 Engine	DDQ = 5-Speed Manual Transmission DGS = 4-Speed Automatic AW4 Transmission DGO = ALL AUTOMATIC TRANSMISSIONS DBB = ALL MANUAL TRANSMISSIONS

Water Pump and Related Parts 2.5,4.0L Gas Engines (EP0,ER0)
Figure 7-210

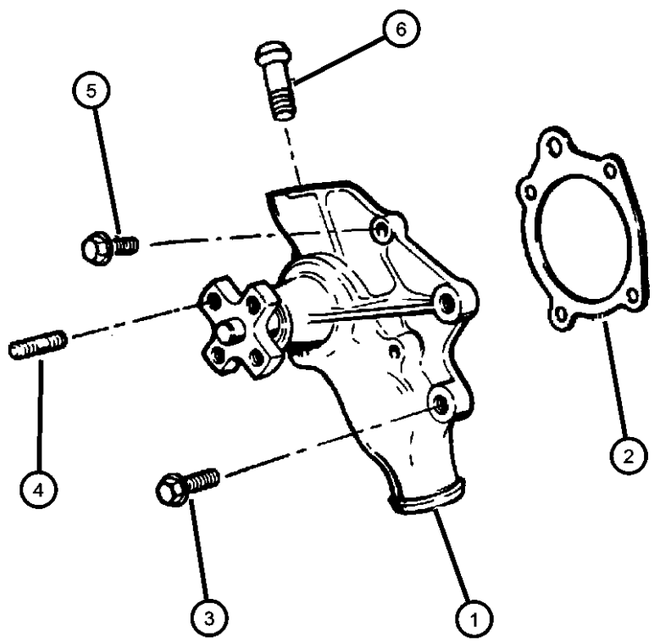

ITEM	PART NUMBER	QTY	LINE	SERIES	BODY	ENGINE	TRANS	TRIM	DESCRIPTION
Note: Sales Code EP0 = 2.5L Gas Engine									
Note: Sales Code ER0 = 4.0L Engine									
1									PUMP PACKAGE, Water
	04626054	1				EP0			
	04626215	1				ER0			
2	53020420	1				EP0, ER0			GASKET, Water Pump
3	06033979	1				EP0, ER0			SCREW AND WASHER, Hex Head, .312-18x1.75
4									BOLT AND CONED WASHER, Hex Head, M8x14x17
	J4006714	4				EP0			
		4				ER0			
5	06033978	3				EP0, ER0			SCREW AND WASHER, Hex Head, .312-18x1.12
6	53007978	1				EP0, ER0			TUBE, Water Pump Heater Return

CHEROKEE (XJ)

SERIES	LINE	BODY	ENGINE	TRANSMISSION
L = LOWLINE	T = JEEP - 2WD B = JEEP - 2WD (RHD) J = JEEP - 4WD U = JEEP - 4WD (RHD)	72 = SPORT UTILITY 2-DR 74 = SPORT UTILITY 4-DR	ENC = 2.5L 4 Cyl Turbo Diesel Engine EPB = 2.5L 4 Cylinder Engine EPE = Engine - 2.5L Power Tech I-4 Cyl. ERH = 4.0L Power Tech I-6 Engine	DDQ = 5-Speed Manual Transmission DGS = 4-Speed Automatic AW4 Transmission DGO = ALL AUTOMATIC TRANSMISSIONS DBB = ALL MANUAL TRANSMISSIONS

Water Pump and Water Manifold 2.5L Diesel Engine (EN0)
Figure 7-215

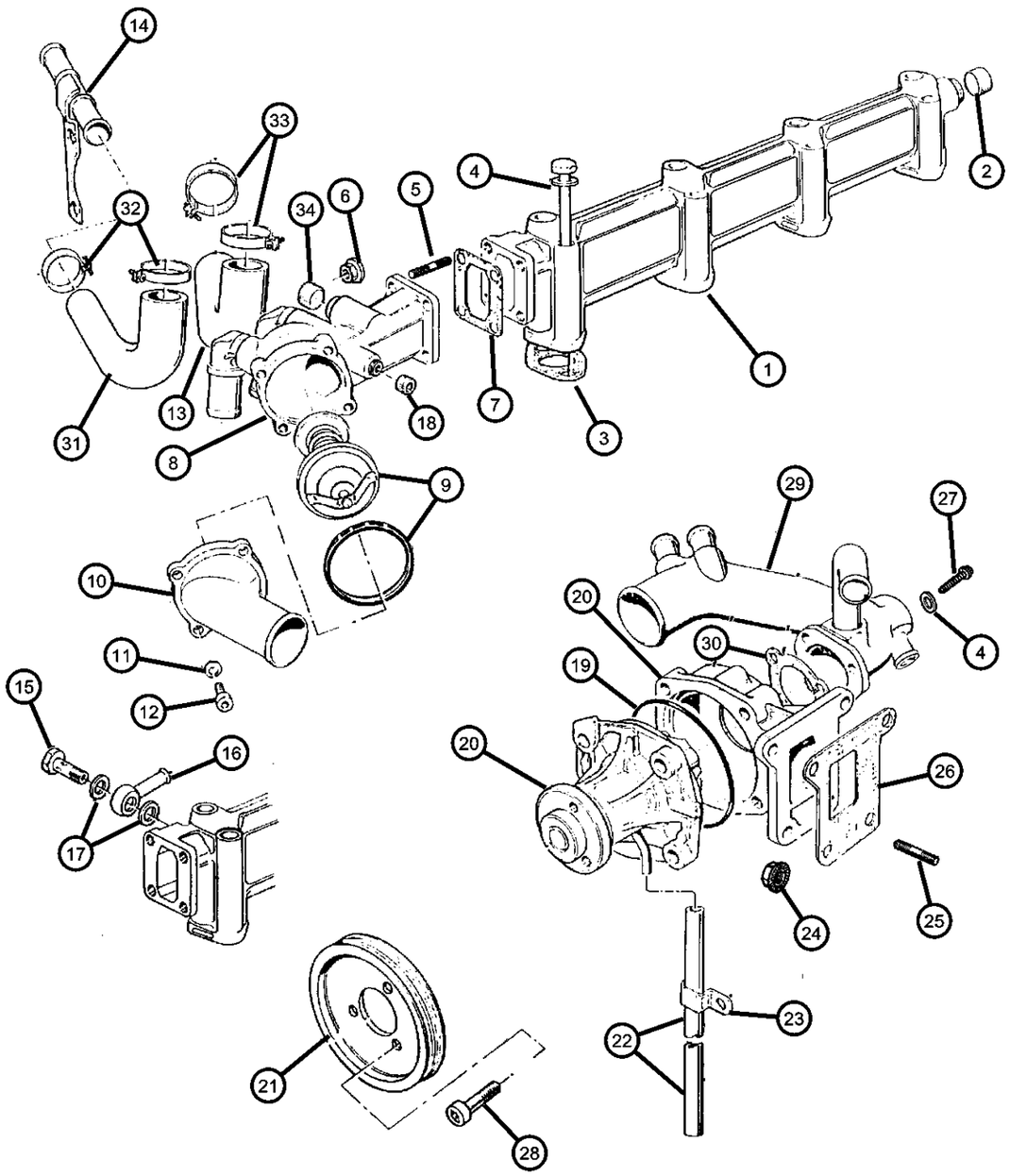

ITEM	PART NUMBER	QTY	LINE	SERIES	BODY	ENGINE	TRANS	TRIM	DESCRIPTION
Note: Sales Code EN0 = 2.5L Diesel Engine									
1	04797748	1				EN0			MANIFOLD, Water
2	04864753	1				EN0			PLUG
3	04720450	4				EN0			GASKET, Water Manifold
4	04720305	8				EN0			WASHER, Plain
5	04797764	4				EN0			STUD, M6x14
6	04778936	9				EN0			NUT, Suction Pipe Attaching
7	04778971	1				EN0			GASKET, Thermostat
8	04778974	1				EN0			HOUSING, Thermostat
9	04778975	1				EN0			THERMOSTAT
10	04778976	1				EN0			COVER, Thermostat Housing
11	04720305	8				EN0			WASHER, Plain
12	04720658	4				EN0			SCREW, Intake Manifold Elbow
13	04778977	1				EN0			HOSE, Water Pump Bypass
14	04778980	1				EN0			TUBE, Heater Feed
15	04720358	6				EN0			BOLT, Banjo
16	04797755	1				EN0			BANJO, Air Bleed
17	04720554	12				EN0			WASHER, Banjo
18	04797047	1				EN0			PLUG, Water Manifold
19	04723198	1				EN0			O RING, Water Pump
20	04864566	1				EN0			PUMP, Water
21	04778982	1				EN0			PULLEY, Water Pump
22	04720438	1				EN0			PIPE, Water Pump Drain
23	04720446	1				EN0			CLIP, Drain Pipe
24	04778961	22				EN0			NUT
25	04720550	4				EN0			STUD, Water Pump To Block
26	04720451	1				EN0			GASKET, Water Pump
27	04720551	3				EN0			SCREW, Water Pump To Pipe
28	04864559	23				EN0			SCREW
29	04886303AA	1				EN0			ADAPTER, Water Return To Pump
30	04864575	1				EN0			GASKET, Water Pump
31	04883431AA	1				EN0			HOSE, Heater Feed
32	04883924AA	4				EN0			CLAMP, Heater Hose

CHEROKEE (XJ)

SERIES	LINE	BODY	ENGINE	TRANSMISSION
L = LOWLINE	T = JEEP - 2WD B = JEEP - 2WD (RHD) J = JEEP - 4WD U = JEEP - 4WD (RHD)	72 = SPORT UTILITY 2-DR 74 = SPORT UTILITY 4-DR	ENC = 2.5L 4 Cyl Turbo Diesel Engine EPB = 2.5L 4 Cylinder Engine EPE = Engine - 2.5L Power Tech I-4 Cyl. ERH = 4.0L Power Tech I-6 Engine	DDQ = 5-Speed Manual Transmission DGS = 4-Speed Automatic AW4 Transmission DGO = ALL AUTOMATIC TRANSMISSIONS DBB = ALL MANUAL TRANSMISSIONS

Water Pump and Water Manifold 2.5L Diesel Engine (EN0)
Figure 7-215

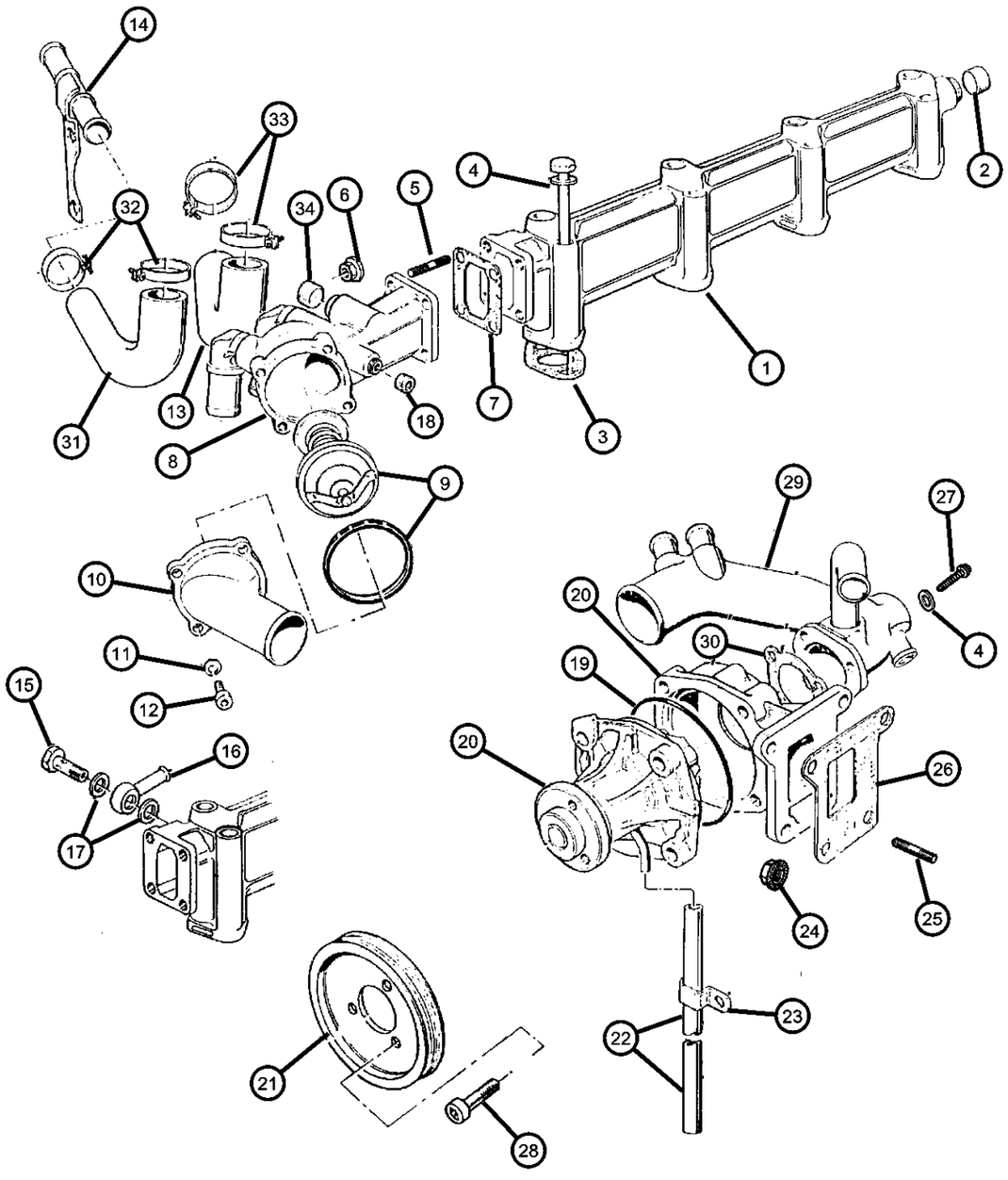

ITEM	PART NUMBER	QTY	LINE	SERIES	BODY	ENGINE	TRANS	TRIM	DESCRIPTION
33	04883924AA	4							CLAMP, Heater Hose, (NOT SERVICED)
34	04723197	1				EN0			PLUG, Water Manifold

CHEROKEE (XJ)

SERIES	LINE	BODY	ENGINE	TRANSMISSION
L = LOWLINE	T = JEEP - 2WD B = JEEP - 2WD (RHD) J = JEEP - 4WD U = JEEP - 4WD (RHD)	72 = SPORT UTILITY 2-DR 74 = SPORT UTILITY 4-DR	ENC = 2.5L 4 Cyl Turbo Diesel Engine EPB = 2.5L 4 Cylinder Engine EPE = Engine - 2.5L Power Tech I-4 Cyl. ERH = 4.0L Power Tech I-6 Engine	DDQ = 5-Speed Manual Transmission DGS = 4-Speed Automatic AW4 Transmission DGO = ALL AUTOMATIC TRANSMISSIONS DBB = ALL MANUAL TRANSMISSIONS

Bottle, Coolant Recovery
Figure 7-305

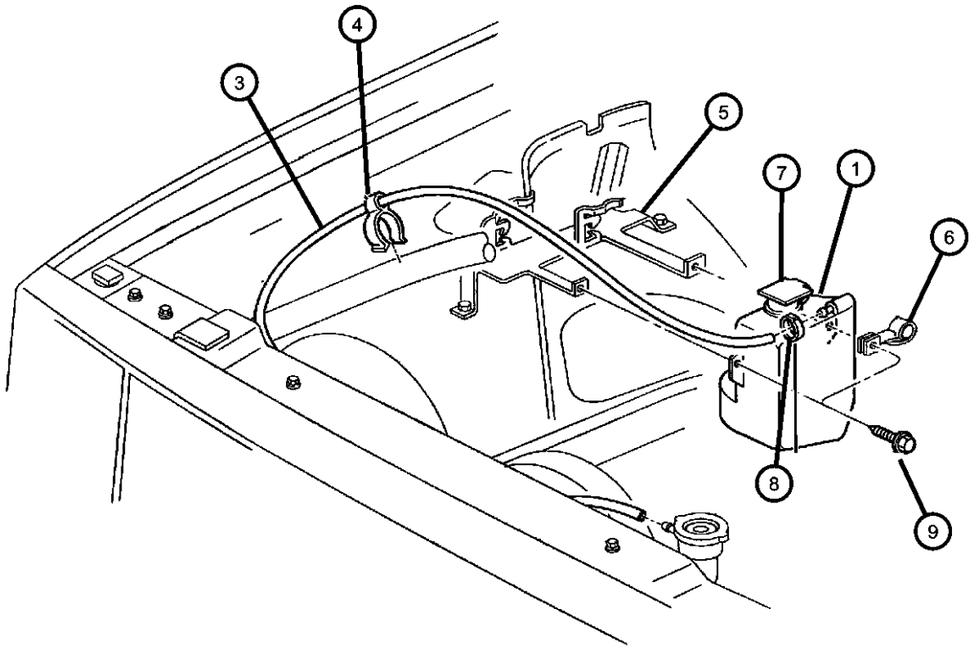

ITEM	PART NUMBER	QTY	LINE	SERIES	BODY	ENGINE	TRANS	TRIM	DESCRIPTION
Note: Sales Code DD0 = All Manual 5 Speed Trans									
Note: Sales Code EN0 = 2.5L Diesel Engine									
Note: Sales Code EP0 = 2.5L Gas Engine									
Note: Sales Code ER0 = 4.0L Engine									
1	52027984	1				EP0, ER0			TANK, Coolant Reserve
-2	52079493	1				EN0	DD0		BOTTLE, Degasser
3	04026148	1				EP0			HOSE, Coolant Reserve Tank
4									CLIP, Hose
	52007404	1				ER0			
		1	J, T			EP0			
5									BRACKET, Power Distribution Center
	56008885	1	B			EP0, ER0			
		1	J, T			EP0, ER0			
6									CLIP, Cable
	06025867	1	B, U			EPE, ERH			
	53009375	1	J, T			EPE, ERH			
7	52079331	1				EP0, ER0			CAP, Coolant Reserve Tank
8	33000786	1				EP0, ER0			CLAMP, Hose
9	33000786	1							SCREW, (NOT SERVICED)

CHEROKEE (XJ)

SERIES	LINE	BODY	ENGINE	TRANSMISSION
L = LOWLINE	T = JEEP - 2WD B = JEEP - 2WD (RHD) J = JEEP - 4WD U = JEEP - 4WD (RHD)	72 = SPORT UTILITY 2-DR 74 = SPORT UTILITY 4-DR	ENC = 2.5L 4 Cyl Turbo Diesel Engine EPB = 2.5L 4 Cylinder Engine EPE = Engine - 2.5L Power Tech I-4 Cyl. ERH = 4.0L Power Tech I-6 Engine	DDQ = 5-Speed Manual Transmission DGS = 4-Speed Automatic AW4 Transmission DGO = ALL AUTOMATIC TRANSMISSIONS DBB = ALL MANUAL TRANSMISSIONS

Bottle, Coolant Recovery
Figure 7-310

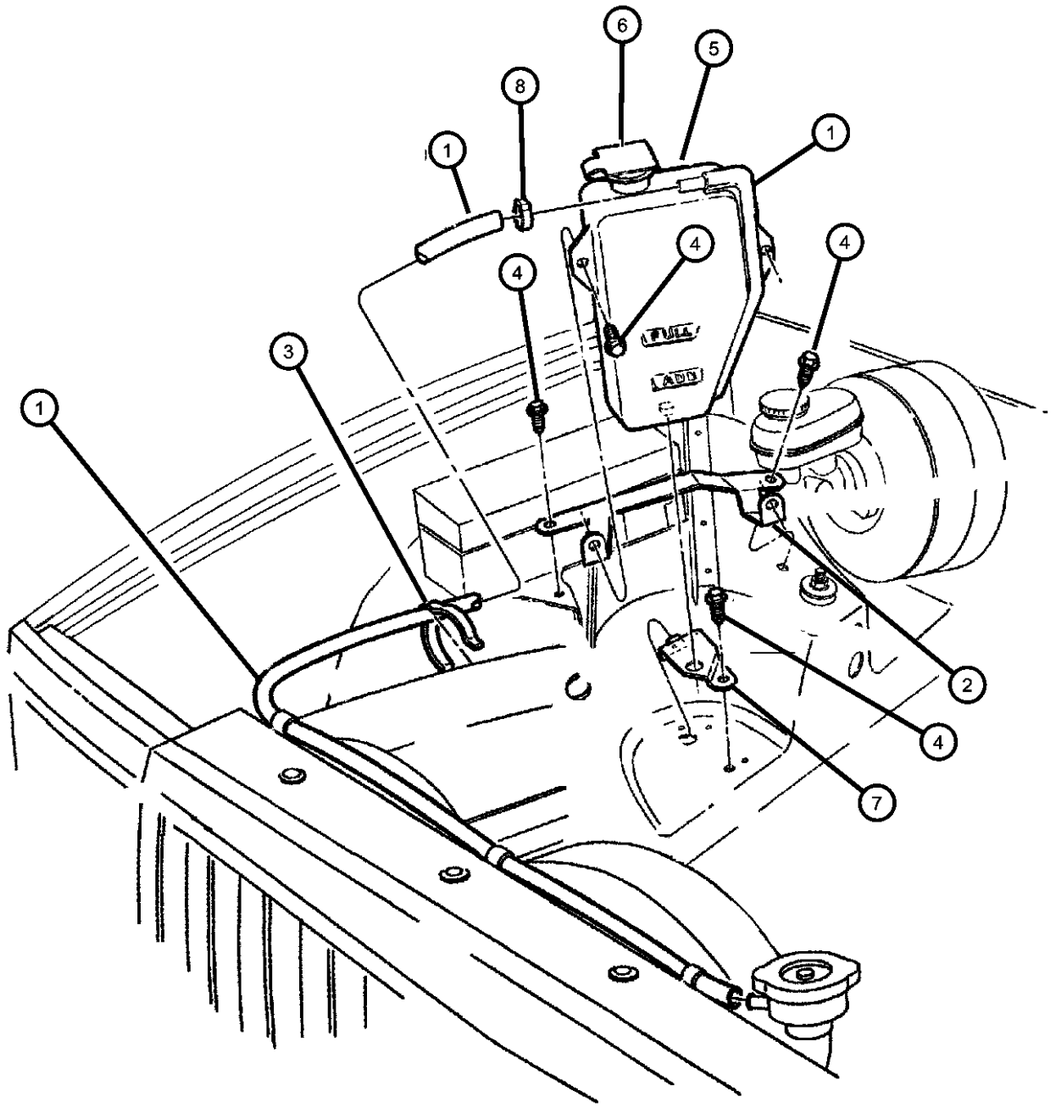

ITEM	PART NUMBER	QTY	LINE	SERIES	BODY	ENGINE	TRANS	TRIM	DESCRIPTION
Note: Sales Code EP0 = 2.5L Gas Engine Note: Sales Code ER0 = 4.0L Engine									
1	04026148	1				EP0			HOSE, Coolant Reserve Tank
2	52028346	1	B, U			EP0, ER0			BRACKET, Coolant Recovery Bottle
3	52007404	1				ER0			CLIP, Hose
4	06100557	1	B, U			EPE, ER0			BOLT AND CONED WASHER, Hex Head, M6x20x14
5	52027984	1				EP0, ER0			TANK, Coolant Reserve
6	52079331	1				EP0, ER0			CAP, Coolant Reserve Tank
7	52028347	1	B, U			EP0, ER0			BRACKET, Coolant Recovery Bottle
8	02448761	1	B, U			ENC			CLAMP, Hose

CHEROKEE (XJ)

SERIES	LINE	BODY	ENGINE	TRANSMISSION
L = LOWLINE	T = JEEP - 2WD B = JEEP - 2WD (RHD) J = JEEP - 4WD U = JEEP - 4WD (RHD)	72 = SPORT UTILITY 2-DR 74 = SPORT UTILITY 4-DR	ENC = 2.5L 4 Cyl Turbo Diesel Engine EPB = 2.5L 4 Cylinder Engine EPE = Engine - 2.5L Power Tech I-4 Cyl. ERH = 4.0L Power Tech I-6 Engine	DDQ = 5-Speed Manual Transmission DGS = 4-Speed Automatic AW4 Transmission DGO = ALL AUTOMATIC TRANSMISSIONS DBB = ALL MANUAL TRANSMISSIONS

Drive Pulleys, 2.5L Gas Engine (EP0)
Figure 7-407

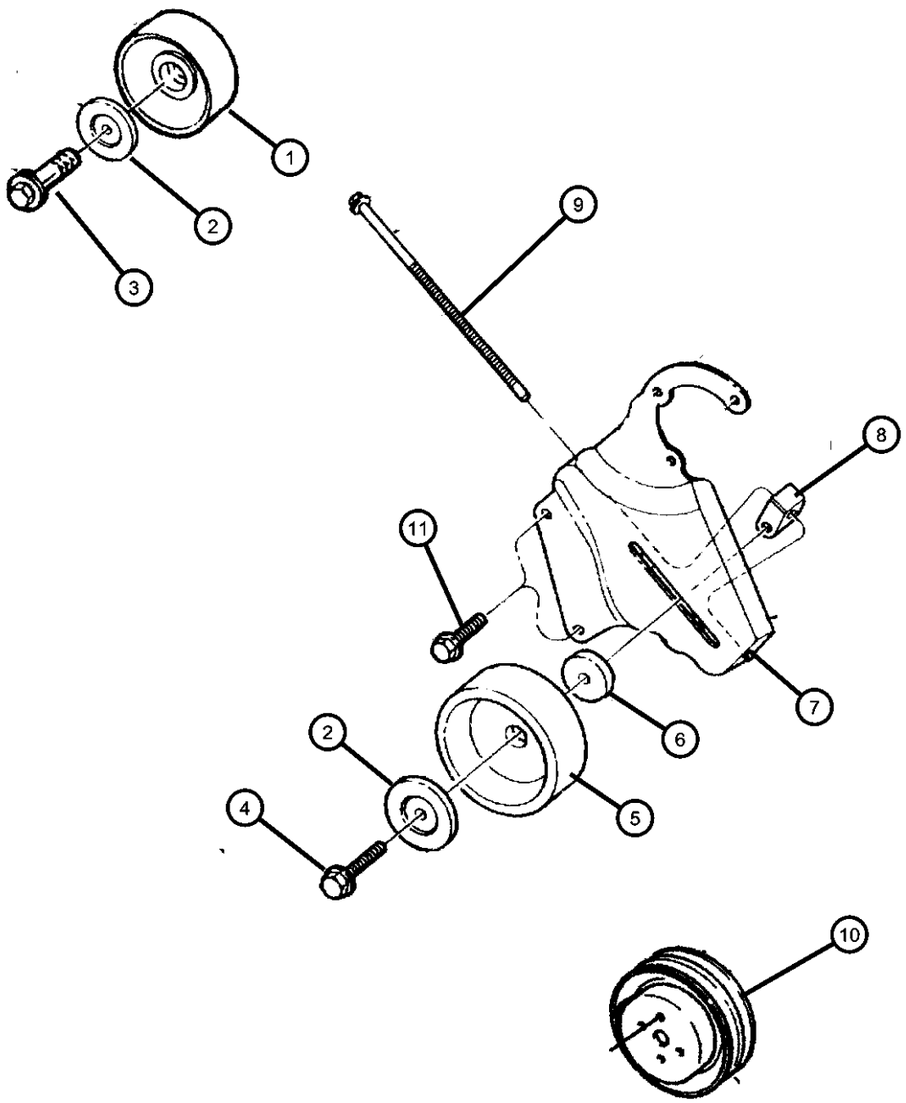

ITEM	PART NUMBER	QTY	LINE	SERIES	BODY	ENGINE	TRANS	TRIM	DESCRIPTION
Note: Sales Code EP0 = 2.5L Gas Engine									
1									PULLEY, Idler
	53010230	1	J, T			EP0			
		1	B, U			EP0			
2	33002201	1				EP0			BUSHING, Idler Pulley
3									SCREW AND WASHER, M10x1.5x40
	06504239	1	J, T			EP0			
		1	B, U			EP0			
4									BOLT, Hex Flange Head, M10x1.50x50
	34202029	1	J, T			EP0			
		1	B, U			EP0			
5									PULLEY, Idler
	04792112	1	J, T			EP0			
		1	B, U			EP0			
6									SPACER, Belt Tensioner
	06503230	1	J, T			EP0			
		1	B, U			EP0			
7									BRACKET, Tensioner
	53010148	1	J, T			EP0			
		1	B, U			EP0			
8									COLLAR, Tensioner Adjustment
	53010149	1	J, T			EP0			
		1	B, U			EP0			
9									BOLT
	06503198	1	J, T			EP0			
		1	B, U			EP0			
10									PULLEY, Water Pump
	53007154	1	J, T			EP0			
		1	B, U			EP0			
11		1							SCREW, (NOT SERVICED)

CHEROKEE (XJ)

SERIES	LINE	BODY	ENGINE	TRANSMISSION
L = LOWLINE	T = JEEP - 2WD B = JEEP - 2WD (RHD) J = JEEP - 4WD U = JEEP - 4WD (RHD)	72 = SPORT UTILITY 2-DR 74 = SPORT UTILITY 4-DR	ENC = 2.5L 4 Cyl Turbo Diesel Engine EPB = 2.5L 4 Cylinder Engine EPE = Engine - 2.5L Power Tech I-4 Cyl. ERH = 4.0L Power Tech I-6 Engine	DDQ = 5-Speed Manual Transmission DGS = 4-Speed Automatic AW4 Transmission DGO = ALL AUTOMATIC TRANSMISSIONS DBB = ALL MANUAL TRANSMISSIONS

Drive Pulleys, 4.0L Engine (ER0), LHD
Figure 7-408

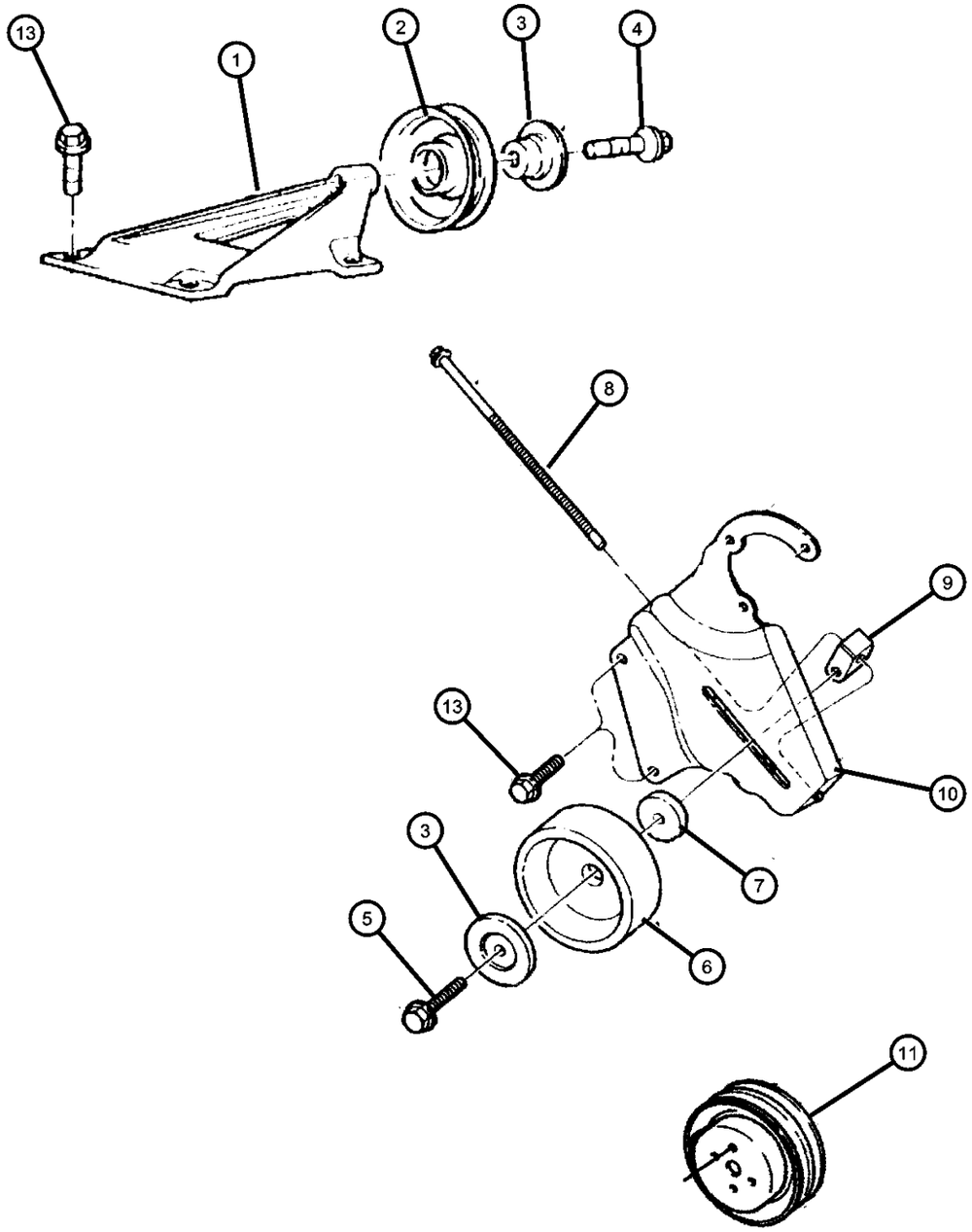

ITEM	PART NUMBER	QTY	LINE	SERIES	BODY	ENGINE	TRANS	TRIM	DESCRIPTION
Note: Sales Code ER0 = 4.0L Engine									
1									BRACKET, Idler Pulley
	53006551	1	J, T			ER0			
	53010125	1	B, U			ER0			
2	53002903	1				ER0			PULLEY, Idler
3	33002201	1	J, T			ER0			BUSHING, Idler Pulley
4									SCREW AND WASHER, M10x1.5x40
	06504239	1	J, T			ER0			
		1	B, U			ER0			
5	34202029	1	J, T			ER0			BOLT, Hex Flange Head, M10x1.50x50
6	04792112	1	J, T			ER0			PULLEY, Idler
7	06503230	1	J, T			ER0			SPACER, Belt Tensioner
8	06503198	1	J, T			EP0			BOLT
9	53010149	1	J, T			ER0			COLLAR, Tensioner Adjustment
10	53010148	1	J, T			ER0			BRACKET, Tensioner
11	53002907	1	J, T			ER0			PULLEY, Water Pump
-12	53010309	1	J, T			ER0			PULLEY, Fan
13	53010309	1							SCREW, (NOT SERVICED)

CHEROKEE (XJ)

SERIES	LINE	BODY	ENGINE	TRANSMISSION
L = LOWLINE	T = JEEP - 2WD B = JEEP - 2WD (RHD) J = JEEP - 4WD U = JEEP - 4WD (RHD)	72 = SPORT UTILITY 2-DR 74 = SPORT UTILITY 4-DR	ENC = 2.5L 4 Cyl Turbo Diesel Engine EPB = 2.5L 4 Cylinder Engine EPE = Engine - 2.5L Power Tech I-4 Cyl. ERH = 4.0L Power Tech I-6 Engine	DDQ = 5-Speed Manual Transmission DGS = 4-Speed Automatic AW4 Transmission DGO = ALL AUTOMATIC TRANSMISSIONS DBB = ALL MANUAL TRANSMISSIONS

Drive Pulleys, 4.0L Engine (ER0), RHD
Figure 7-409

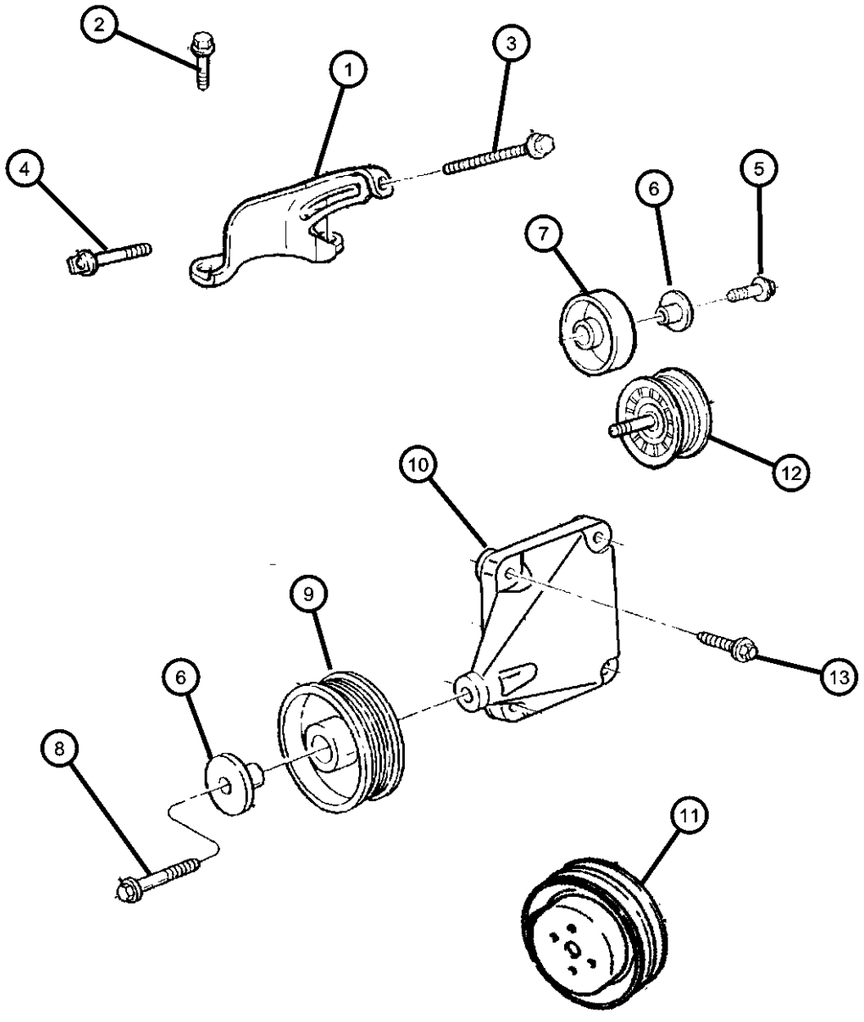

ITEM	PART NUMBER	QTY	LINE	SERIES	BODY	ENGINE	TRANS	TRIM	DESCRIPTION
Note: Sales Code ER0 = 4.0L Engine									
1	53010190	1	B, U			ER0			BRACKET, Tensioner
2	06502144	1	B, U			EP0			SCREW AND WASHER, Hex Head, M10x1.5x25
3	06502929	1	B, U			ER0			SCREW AND WASHER, Hex Head, M8x1.25x110
4	06502592	1	B, U			ER0			SCREW, M8x1.25 Tapped Head, M10x1.5x50
5	06502137	2	B			EP0, ER0			BOLT, Hex Flange Head, M10x1.50x35
6	33002201	1	B, U			EP0			BUSHING, Idler Pulley
7	53010230	1	B, U			ER0			PULLEY, Idler
8	06034497	1	B, U			ER0			BOLT AND WASHER, Hex Head, .375-16x2.375
9	53002903	1	B, U			ER0			PULLEY, Idler
10	53010163	1	B, U			ER0			BRACKET, Fan
11	53002907	1	B, U			ER0			PULLEY, Water Pump
12	53010228AB	1	B, U			ER0			PULLEY, Idler
13	53010228AB	1							SCREW, (NOT SERVICED)

CHEROKEE (XJ)

SERIES	LINE	BODY	ENGINE	TRANSMISSION
L = LOWLINE	T = JEEP - 2WD B = JEEP - 2WD (RHD) J = JEEP - 4WD U = JEEP - 4WD (RHD)	72 = SPORT UTILITY 2-DR 74 = SPORT UTILITY 4-DR	ENC = 2.5L 4 Cyl Turbo Diesel Engine EPB = 2.5L 4 Cylinder Engine EPE = Engine - 2.5L Power Tech I-4 Cyl. ERH = 4.0L Power Tech I-6 Engine	DDQ = 5-Speed Manual Transmission DGS = 4-Speed Automatic AW4 Transmission DGO = ALL AUTOMATIC TRANSMISSIONS DBB = ALL MANUAL TRANSMISSIONS

Drive Pulleys, 2.5L Diesel Engine (EN0)
Figure 7-415

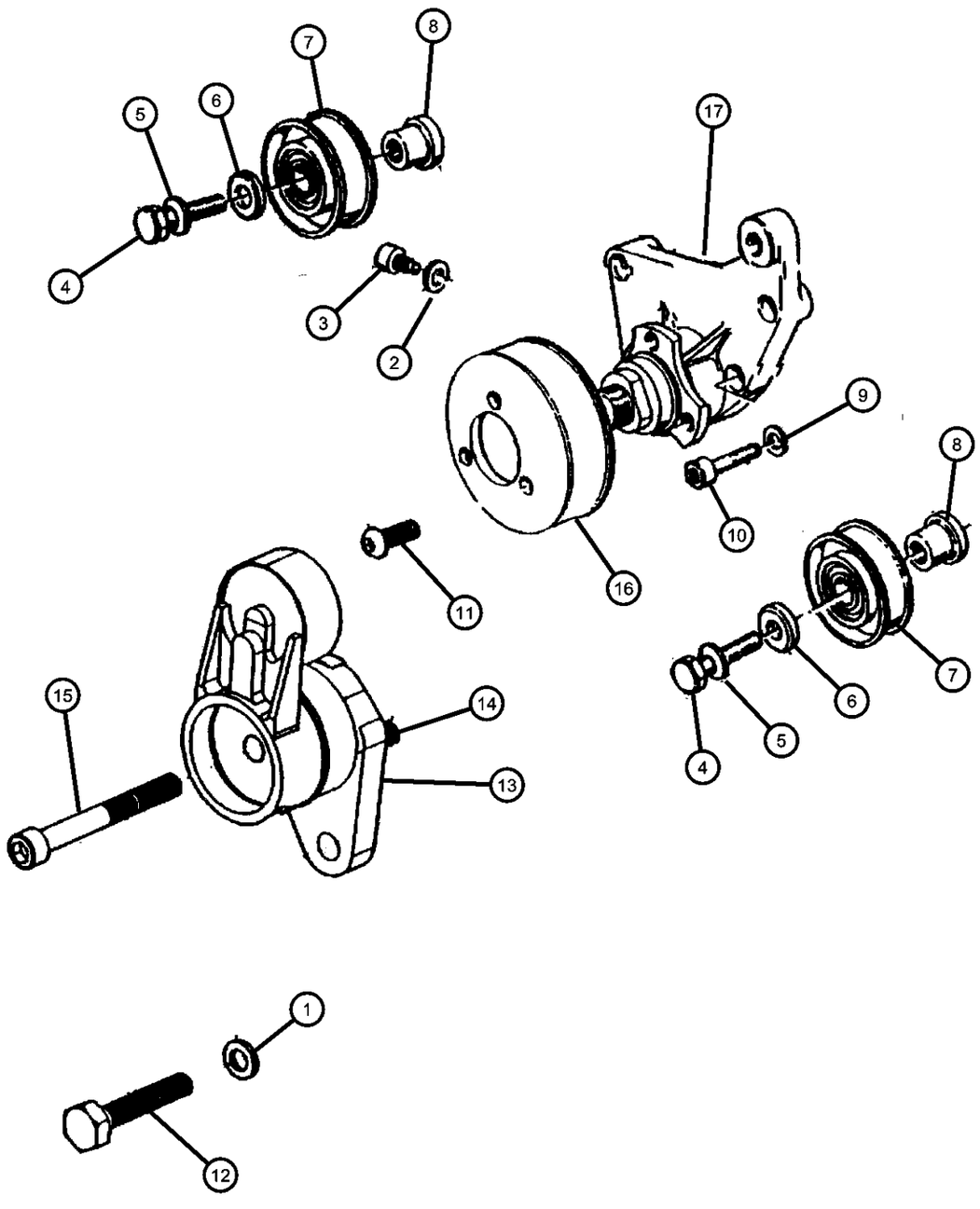

ITEM	PART NUMBER	QTY	LINE	SERIES	BODY	ENGINE	TRANS	TRIM	DESCRIPTION
Note: Sales Code EN0 = 2.5L Diesel Engine									
1	04863828	1				EN0			WASHER
2	04723200	1				EN0			WASHER, Flat
3	04796030	1				EN0			SCREW, Fan Bearing
4	04797773	2				EN0			BOLT, Left Hand Thread, M10x50
5	04720243	4				EN0			WASHER, Lock, M10
6	04796015	2				EN0			WASHER, Idler Pulley
7	04796016	1				EN0			PULLEY, Idler
8	04796017	2				EN0			SHAFT, Idler Pulley
9	04720688	6				EN0			WASHER, Flat
10	04797768	6				EN0			BOLT, Vacuum Pump Bracket, M10x35
11	04864559	23				EN0			SCREW
12	04886054AA	1				EN0			BOLT, Belt Tensioner
13	04897159AA	1				EN0			TENSIONER, Belt
14	04883528AA	2				EN0			BOLT, Adaptor Plate
15	04886053AA	1				EN0			BOLT, Belt Tensioner
16	04883491AA	1				EN0			PULLEY, Fan
17	04864597AB	1				EN0			BRACKET, Fan

CHEROKEE (XJ)

SERIES	LINE	BODY	ENGINE	TRANSMISSION
L = LOWLINE	T = JEEP - 2WD B = JEEP - 2WD (RHD) J = JEEP - 4WD U = JEEP - 4WD (RHD)	72 = SPORT UTILITY 2-DR 74 = SPORT UTILITY 4-DR	ENC = 2.5L 4 Cyl Turbo Diesel Engine EPB = 2.5L 4 Cylinder Engine EPE = Engine - 2.5L Power Tech I-4 Cyl. ERH = 4.0L Power Tech I-6 Engine	DDQ = 5-Speed Manual Transmission DGS = 4-Speed Automatic AW4 Transmission DGO = ALL AUTOMATIC TRANSMISSIONS DBB = ALL MANUAL TRANSMISSIONS

Drive Belts
Figure 7-510

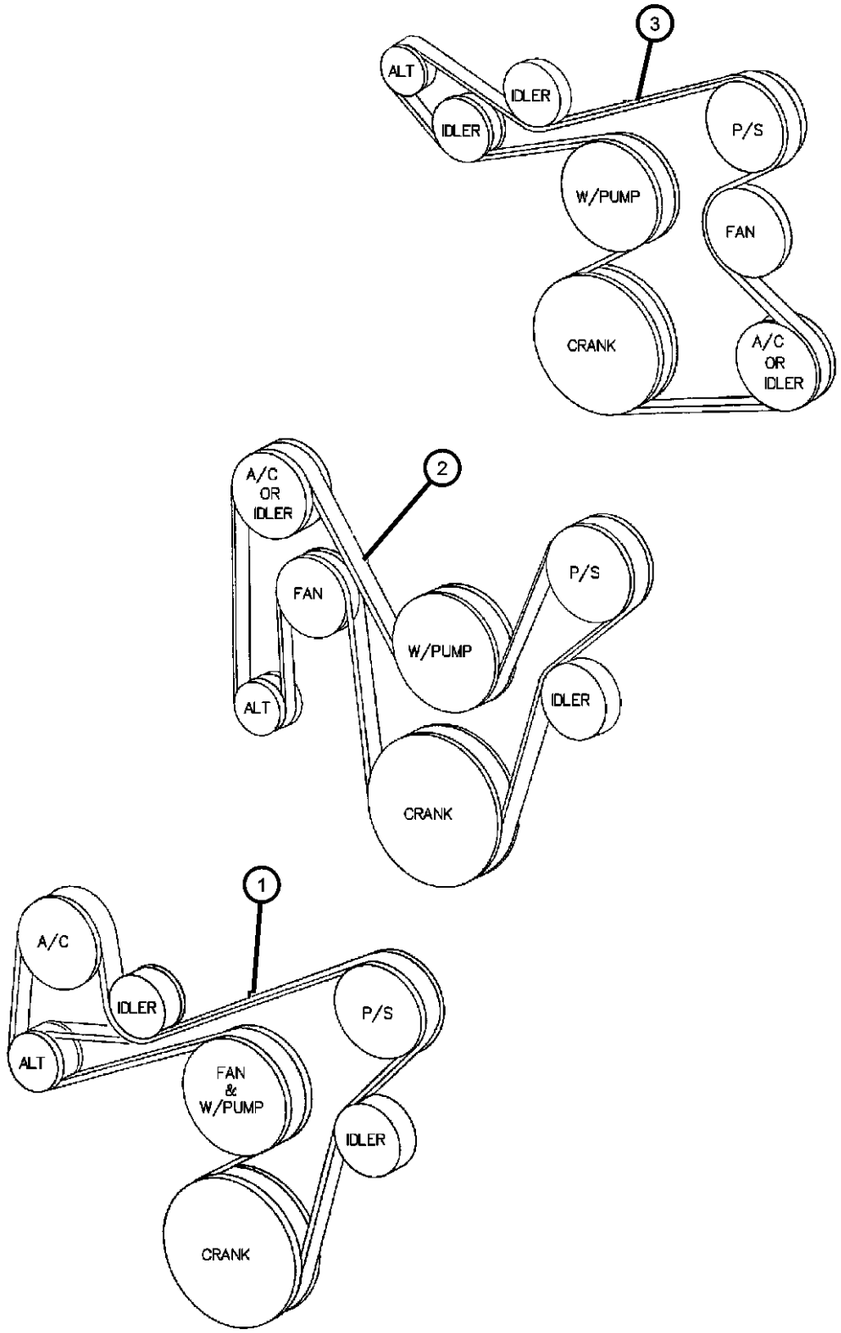

ITEM	PART NUMBER	QTY	LINE	SERIES	BODY	ENGINE	TRANS	TRIM	DESCRIPTION
1									BELT, Accessory Drive
	04796033	1				EN0			2.5L Diesel Engine
	53010257	1	J, T			EP0			2.5L Engine, Heater
	53010311	1	B, U			EP0			2.5L Engine, Heater
	53011035	1	J, T			EP0			2.5L Engine, A/C
	53012002	1	B, U			EP0			2.5L Engine, A/C
2	53010314	1	J, T			ER0			BELT, Accessory Drive, 4.0L Engine
3	53010234	1	B, U			ER0			BELT, Accessory Drive, 4.0L Engine
-4									LABEL, Belt Routing
	53010297	1	B, U			ER0			
	53010298	1				EP0			
	53010299	1	J, T			ER0			
	53040078	1				EN0			
-5	04883518AA	1				EN0			BELT, Fan

CHEROKEE (XJ)

SERIES	LINE	BODY	ENGINE	TRANSMISSION
L = LOWLINE	T = JEEP - 2WD B = JEEP - 2WD (RHD) J = JEEP - 4WD U = JEEP - 4WD (RHD)	72 = SPORT UTILITY 2-DR 74 = SPORT UTILITY 4-DR	ENC = 2.5L 4 Cyl Turbo Diesel Engine EPB = 2.5L 4 Cylinder Engine EPE = Engine - 2.5L Power Tech I-4 Cyl. ERH = 4.0L Power Tech I-6 Engine	DDQ = 5-Speed Manual Transmission DGS = 4-Speed Automatic AW4 Transmission DGO = ALL AUTOMATIC TRANSMISSIONS DBB = ALL MANUAL TRANSMISSIONS

Oil Cooler Lines, LHD
Figure 7-610

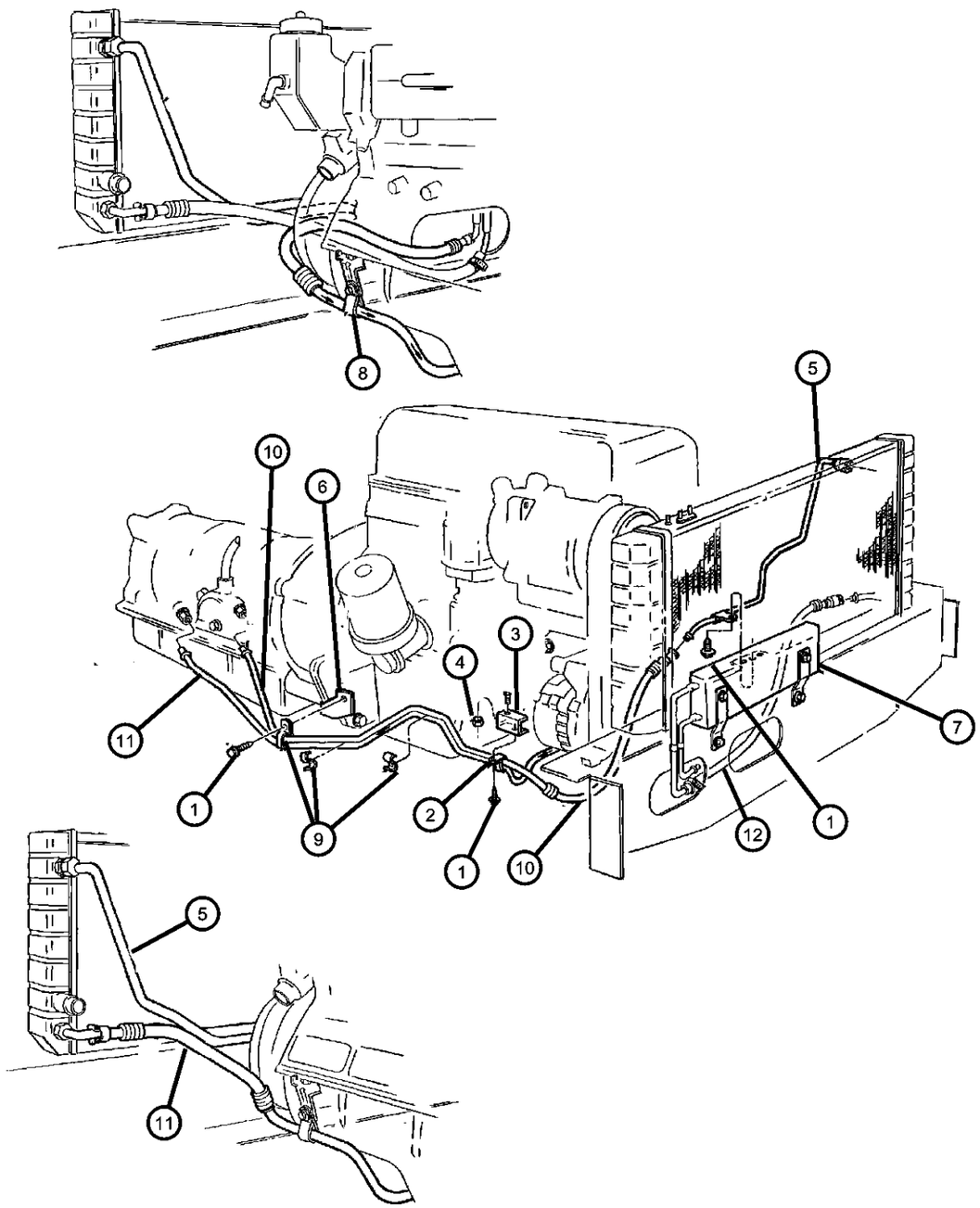

ITEM	PART NUMBER	QTY	LINE	SERIES	BODY	ENGINE	TRANS	TRIM	DESCRIPTION
Note: Sales Code DG0 = All Auto Trans									
Note: Sales Code DGD = 3 Speed Auto Trans									
Note: Sales Code ER0 = 4.0L Engine									
Note: Sales Code EP0 = 2.5L Engine									
1	06035058	4				ER0	DG0		SCREW, Hex Flange Head, .19-16x.50
2	34202698	1				ER0	DG0		CLIP, Oil Tube
3	53004990	1				ER0	DG0		BRACKET, Oil Cooler Tube
4	06033560	2				ER0	DG0		NUT AND WASHER, Hex Nut-Coned Washer, .25-20
5	52028328	1	J, T			ER0	DG0		TUBE, Supply
6	53004631	1				ER0	DG0		BRACKET, Oil Cooler Tube
7	52028516AB	1	J, T			ER0			COOLER, Transmission Oil
8									CLIP, Oil Cooler Tube
	34202697	2	J, T			ER0	DG0		
		2	B, U			EP0			
9		2							CLIP, (NOT SERVICED)
10									TUBE AND HOSE, Return
	52028566AB	1	J, T			ER0	DG0		
	52118569	1	J, T			EP0	DGD		
11									TUBE AND HOSE, Supply
	52028504	1	J, T			EP0	DGD		
	52028605AB	1	J, T			ER0	DG0		
12	05003096AA	1	J, T			ER0			HOSE AND CONNECTOR, Oil Cooler

CHEROKEE (XJ)

SERIES	LINE	BODY	ENGINE	TRANSMISSION
L = LOWLINE	T = JEEP - 2WD B = JEEP - 2WD (RHD) J = JEEP - 4WD U = JEEP - 4WD (RHD)	72 = SPORT UTILITY 2-DR 74 = SPORT UTILITY 4-DR	ENC = 2.5L 4 Cyl Turbo Diesel Engine EPB = 2.5L 4 Cylinder Engine EPE = Engine - 2.5L Power Tech I-4 Cyl. ERH = 4.0L Power Tech I-6 Engine	DDQ = 5-Speed Manual Transmission DGS = 4-Speed Automatic AW4 Transmission DGO = ALL AUTOMATIC TRANSMISSIONS DBB = ALL MANUAL TRANSMISSIONS

Oil Cooler Lines, RHD
Figure 7-620

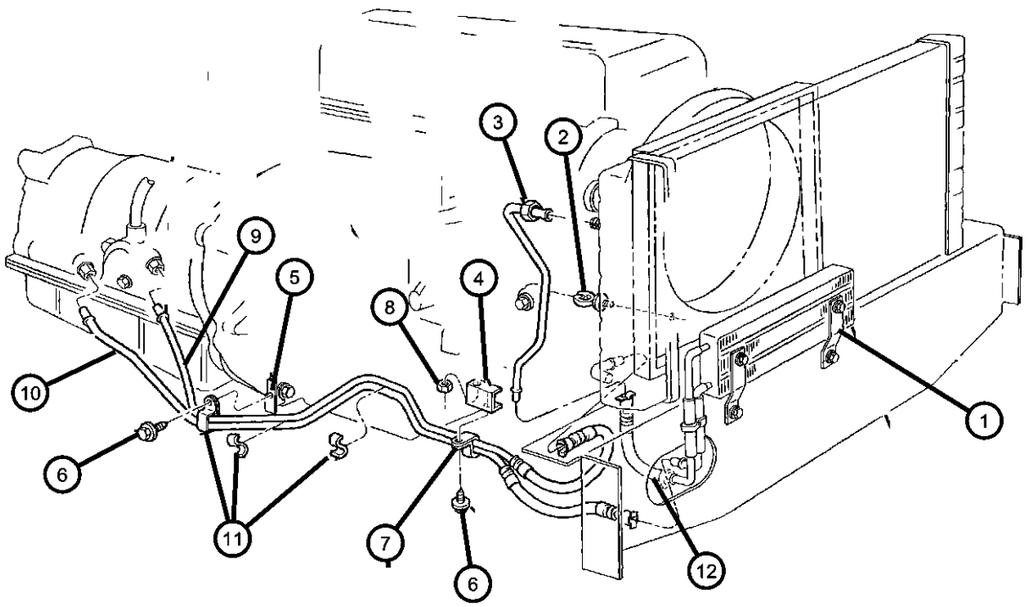

ITEM	PART NUMBER	QTY	LINE	SERIES	BODY	ENGINE	TRANS	TRIM	DESCRIPTION
Note: Sales Code ER0 = 4.0L Engine									
Note: Sales Code DG0 = All Auto Trans									
1	52028517	1	B, U			ER0			COOLER, Transmission Oil
2	32000404	3	B, U						CLIP, Tube
3	52028310	1	B, U			ER0	DG0		TUBE, Oil Cooler
4	53004990	1				ER0	DG0		BRACKET, Oil Cooler Tube
5	53004631	1				ER0	DG0		BRACKET, Oil Cooler Tube
6	06035058	4				ER0	DG0		SCREW, Hex Flange Head, .19-16x.50
7	34202698	1				ER0	DG0		CLIP, Oil Tube
8	06033560	1	B, U			ER0			NUT AND WASHER, Hex Nut-Coned Washer, .25-20
9	52028561	1	B, U			ER0	DG0		TUBE, Oil Cooler
10	52028567	1	B, U			ER0	DG0		TUBE, Oil Cooler
11	52028567	1							CLIP, (NOT SERVICED)
12	05003096AA	1	J, T			ER0			HOSE AND CONNECTOR, Oil Cooler

CHEROKEE (XJ)

SERIES	LINE	BODY	ENGINE	TRANSMISSION
L = LOWLINE	T = JEEP - 2WD B = JEEP - 2WD (RHD) J = JEEP - 4WD U = JEEP - 4WD (RHD)	72 = SPORT UTILITY 2-DR 74 = SPORT UTILITY 4-DR	ENC = 2.5L 4 Cyl Turbo Diesel Engine EPB = 2.5L 4 Cylinder Engine EPE = Engine - 2.5L Power Tech I-4 Cyl. ERH = 4.0L Power Tech I-6 Engine	DDQ = 5-Speed Manual Transmission DGS = 4-Speed Automatic AW4 Transmission DGO = ALL AUTOMATIC TRANSMISSIONS DBB = ALL MANUAL TRANSMISSIONS

Grille and Related Parts
Figure 7-710

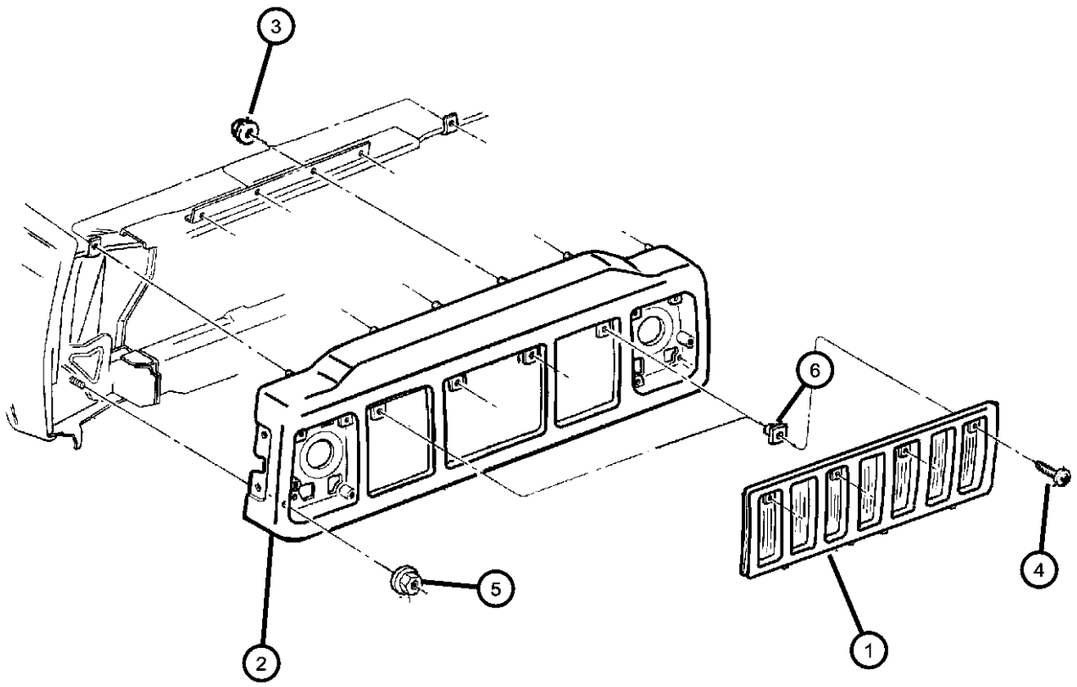

ITEM	PART NUMBER	QTY	LINE	SERIES	BODY	ENGINE	TRANS	TRIM	DESCRIPTION
1									GRILLE, Radiator
	55055150	1							Black Sport and SE
	5EM65DX8	1							Black Country
	5EM65PCJ	1							Blue
	5EM65PR4	1							Red
	5EM65RJN	1							Green
	5EM65SW1	1							White
	5EM65TQ7	1							Aquamarine Blue
2	55055233	1							PANEL, Grille Opening
3	06500284	6							NUT, Hex, M6x1.00
4	06034204	4							SCREW, Pan Head, #6 HiLo
5	06503825	6							NUT AND WASHER, Hex Nut-Coned Washer, M6 x 1.00
6	06035657	4							NUT, Plastic Snap-In, For .164-15 Screw

CHEROKEE (XJ)

SERIES	LINE	BODY	ENGINE	TRANSMISSION
L = LOWLINE	T = JEEP - 2WD B = JEEP - 2WD (RHD) J = JEEP - 4WD U = JEEP - 4WD (RHD)	72 = SPORT UTILITY 2-DR 74 = SPORT UTILITY 4-DR	ENC = 2.5L 4 Cyl Turbo Diesel Engine EPB = 2.5L 4 Cylinder Engine EPE = Engine - 2.5L Power Tech I-4 Cyl. ERH = 4.0L Power Tech I-6 Engine	DDQ = 5-Speed Manual Transmission DGS = 4-Speed Automatic AW4 Transmission DGO = ALL AUTOMATIC TRANSMISSIONS DBB = ALL MANUAL TRANSMISSIONS

Group - 8

Electrical

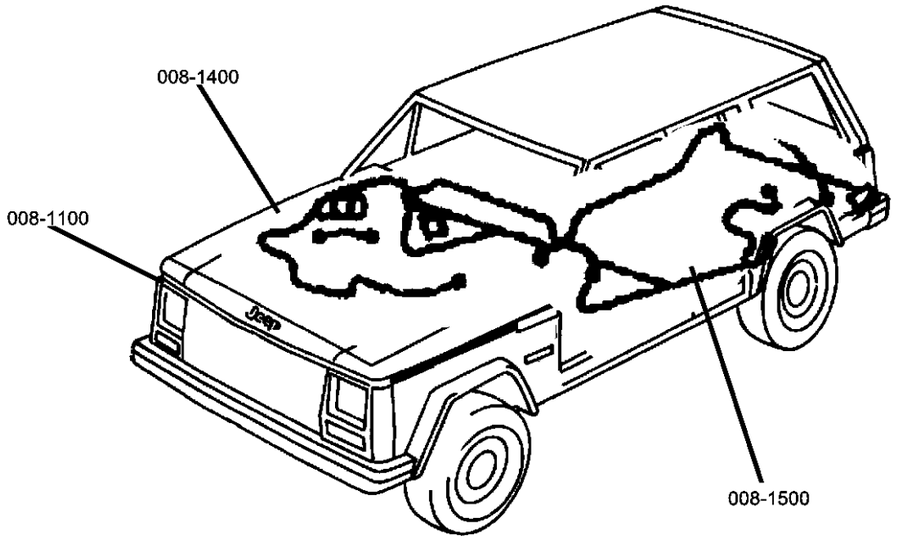

008-100 Starters 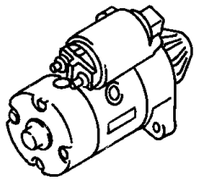	**008-1000** Battery Tray and Cables 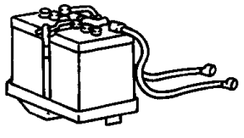	**008-1100** Lamps - Front, Rear and Courtesy 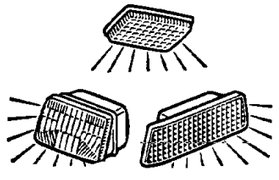	**008-1200** Wiring-Engine & Related Parts 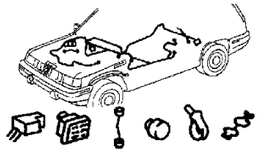
008-1300 Wiring-Headlamp to Dash 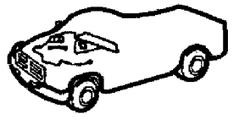	**008-1400** Wiring-Instrument Panel WIRING INSTR. PANEL	**008-1500** Wiring-Body & Accessories 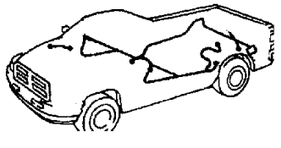	**008-1600** Wiring Repair WIRING REPAIR KIT

008-1900 Spark Plugs-Cables-Coils 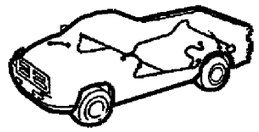	**008-200** Alternators 	**008-300** Distributor 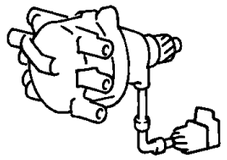	**008-400** Modules 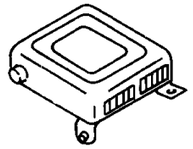
008-500 Relays 	**008-600** Sensors 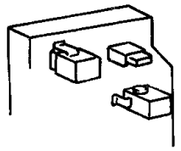	**008-700** Single Board Engine Controllers 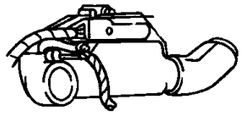	**008-800** Switches 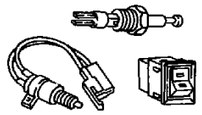
008-900 Horns 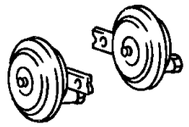			

Group - 8 Electrical

Illustration Title — Group-Fig. No.

Starters
Starter & Mounting (2.5L & 4.0L Engines) ..... Fig. 8 - 105
Starter & Mounting (Diesel Engine) ..... Fig. 8 - 110

Alternators
Alternator 2.5L & 4.0L Engine ..... Fig. 8 - 205
Alternator Diesel Engine ..... Fig. 8 - 210

Distributor
Distributor 2.5L Engine ..... Fig. 8 - 305
Distributor 4.0L Engine ..... Fig. 8 - 310

Modules
Modules ..... Fig. 8 - 405

Relays
Relays ..... Fig. 8 - 510

Sensors
Sensors ..... Fig. 8 - 605

Single Board Engine Controllers
Single Board Engine Controllers ..... Fig. 8 - 710

Switches
Switches & Sending Units ..... Fig. 8 - 810

Horns
Horns ..... Fig. 8 - 910

Battery Tray and Cables
Battery Tray ..... Fig. 8 - 1005
Battery Cables ..... Fig. 8 - 1010

Lamps - Front, Rear and Courtesy
Lamps Fog ..... Fig. 8 - 1135
Lamps Front ..... Fig. 8 - 1140
Lamps Rear ..... Fig. 8 - 1155
Lamps Cargo - Dome - Underhood ..... Fig. 8 - 1165
Bulbs ..... Fig. 8 - 1170

Wiring-Engine & Related Parts
Wiring Engine & Related Parts ..... Fig. 8 - 1210

Wiring-Headlamp to Dash
Wiring Headlamp / Dash ..... Fig. 8 - 1310

Wiring-Instrument Panel
Wiring Instrument Panel ..... Fig. 8 - 1410

Wiring-Body & Accessories
Wiring Body & Accessory ..... Fig. 8 - 1510

Wiring Repair
Wiring Repair ..... Fig. 8 - 1605
Power Distribution Center Repair ..... Fig. 8 - 1610

Spark Plugs-Cables-Coils
Spark Plug-Cables & Coils ..... Fig. 8 - 1905

Starter & Mounting (2.5L & 4.0L Engines)
Figure 8-105

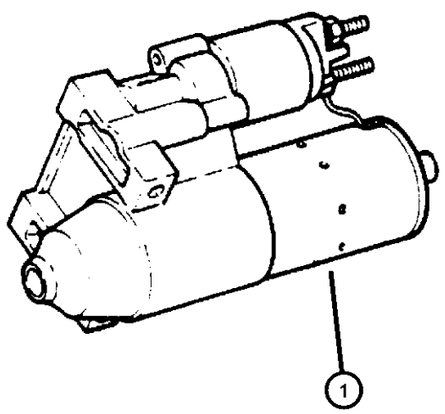

ITEM	PART NUMBER	QTY	LINE	SERIES	BODY	ENGINE	TRANS	TRIM	DESCRIPTION
EP0=2.5L Engine ER0=4.0L Engine									
1	04796981	1				EP0			STARTER PACKAGE
-2	56041014	1				ER0			STARTER
-3	J3241711	AR				EP0			SHIM, Starter Motor
-4	06503699	1				ER0			SCREW AND WASHER, Hex Head, M10x1.5x28
-5	J4006192	1				ER0			BOLT AND WASHER, Hex Head, .375-16x1.75

CHEROKEE (XJ)

SERIES	LINE	BODY	ENGINE	TRANSMISSION
L = LOWLINE	T = JEEP - 2WD B = JEEP - 2WD (RHD) J = JEEP - 4WD U = JEEP - 4WD (RHD)	72 = SPORT UTILITY 2-DR 74 = SPORT UTILITY 4-DR	ENC = 2.5L 4 Cyl Turbo Diesel Engine EPB = 2.5L 4 Cylinder Engine EPE = Engine - 2.5L Power Tech I-4 Cyl. ERH = 4.0L Power Tech I-6 Engine	DDQ = 5-Speed Manual Transmission DGS = 4-Speed Automatic AW4 Transmission DGO = ALL AUTOMATIC TRANSMISSIONS DBB = ALL MANUAL TRANSMISSIONS

Starter & Mounting (Diesel Engine)
Figure 8-110

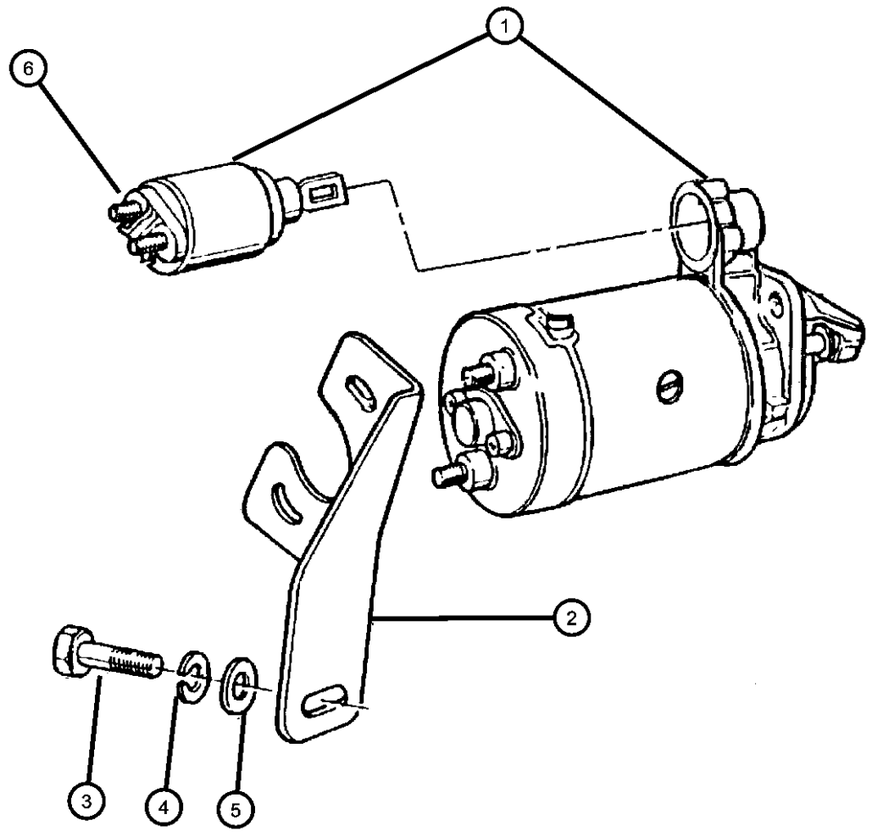

ITEM	PART NUMBER	QTY	LINE	SERIES	BODY	ENGINE	TRANS	TRIM	DESCRIPTION
EN0=4 Cylinder Turbo Diesel Engine									
1	04883447AA	1				EN0			STARTER
2	04796045	1				EN0			BRACKET, Starter
3	04723280	1				EN0			BOLT, Hex Head, M10x20
4	04720686	5				EN0			WASHER, Tow Hook
5	04723281	1				EN0			WASHER, Starter
6	04723275	1				EN0			SOLENOID, Starter
-7	56027329	1				EN0			SHIELD, Heat

CHEROKEE (XJ)

SERIES	LINE	BODY	ENGINE	TRANSMISSION
L = LOWLINE	T = JEEP - 2WD B = JEEP - 2WD (RHD) J = JEEP - 4WD U = JEEP - 4WD (RHD)	72 = SPORT UTILITY 2-DR 74 = SPORT UTILITY 4-DR	ENC = 2.5L 4 Cyl Turbo Diesel Engine EPB = 2.5L 4 Cylinder Engine EPE = Engine - 2.5L Power Tech I-4 Cyl. ERH = 4.0L Power Tech I-6 Engine	DDQ = 5-Speed Manual Transmission DGS = 4-Speed Automatic AW4 Transmission DGO = ALL AUTOMATIC TRANSMISSIONS DBB = ALL MANUAL TRANSMISSIONS

Alternator 2.5L & 4.0L Engine
Figure 8-205

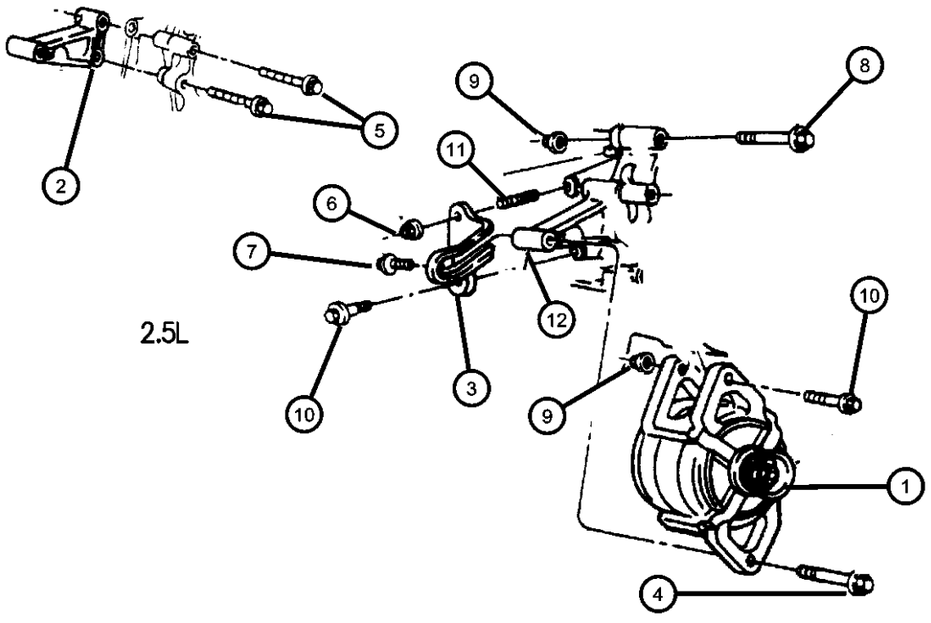

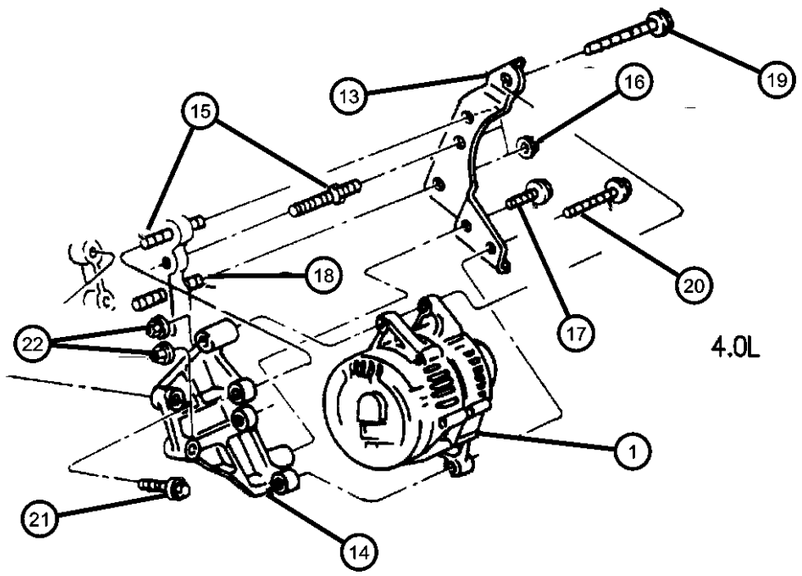

ITEM	PART NUMBER	QTY	LINE	SERIES	BODY	ENGINE	TRANS	TRIM	DESCRIPTION
EP0=2.5L Engine ER0=4.0L Engine ERH=4.0L Power Tech Engine DG0=Automatic Transmission DBB= Manual Transmission									
1									ALTERNATOR
	56005685AB	1	J			EPE, ERH			
		1	B			ERH			
		1	J, T			EPE, ERH			
		1	B, U			ERH			
	56026936	1	B, U			EPE			
2	53007604	1	J, T			EP0			BRACKET, Alternator
3	53007506	1	J, T			EP0			BRACKET, Alternator
4	06502136	1	J, T			EP0			BOLT, Hex Flange Head, M10x1.50x55
5									BOLT, Hex Head, .375-16x2.50
	06033949	2	J, T			EP0			
		2	B, U			EP0			
6	00152344	3				EP0			NUT, .375-16
7									SCREW AND WASHER, Hex Head, M10x1.5x25
	06502144	1	J, T			EP0			
		1	B, U			EP0			
8	06502143	1	B, U			EP0			BOLT, Hex Flange Head, M10x1.5-80
9	06502135	2							NUT, Hex Flange, M10x1.5
10									BOLT, Hex Flange Head, M10x1.50x110
	06502134	1	J, T			EP0			
		1	B, U			ER0			
11	06033883	1				EP0			STUD, .375-16x2.00"
12	53010048	1	B, U			EP0			BRACE, Alternator
13	53006869	1	J, T			ER0			BRACKET, Alternator
14	53008850	1	J, T			ER0			BRACKET, Alternator
15	06034093	2	J, T			ER0			STUD, .375-16x3.750
16	00152344	AR					DBB		NUT, .375-16

CHEROKEE (XJ)

SERIES	LINE	BODY	ENGINE	TRANSMISSION
L = LOWLINE	T = JEEP - 2WD B = JEEP - 2WD (RHD) J = JEEP - 4WD U = JEEP - 4WD (RHD)	72 = SPORT UTILITY 2-DR 74 = SPORT UTILITY 4-DR	ENC = 2.5L 4 Cyl Turbo Diesel Engine EPB = 2.5L 4 Cylinder Engine EPE = Engine - 2.5L Power Tech I-4 Cyl. ERH = 4.0L Power Tech I-6 Engine	DDQ = 5-Speed Manual Transmission DGS = 4-Speed Automatic AW4 Transmission DGO = ALL AUTOMATIC TRANSMISSIONS DBB = ALL MANUAL TRANSMISSIONS

AR = use ase required - = Non illustrrated part

Alternator 2.5L & 4.0L Engine
Figure 8-205

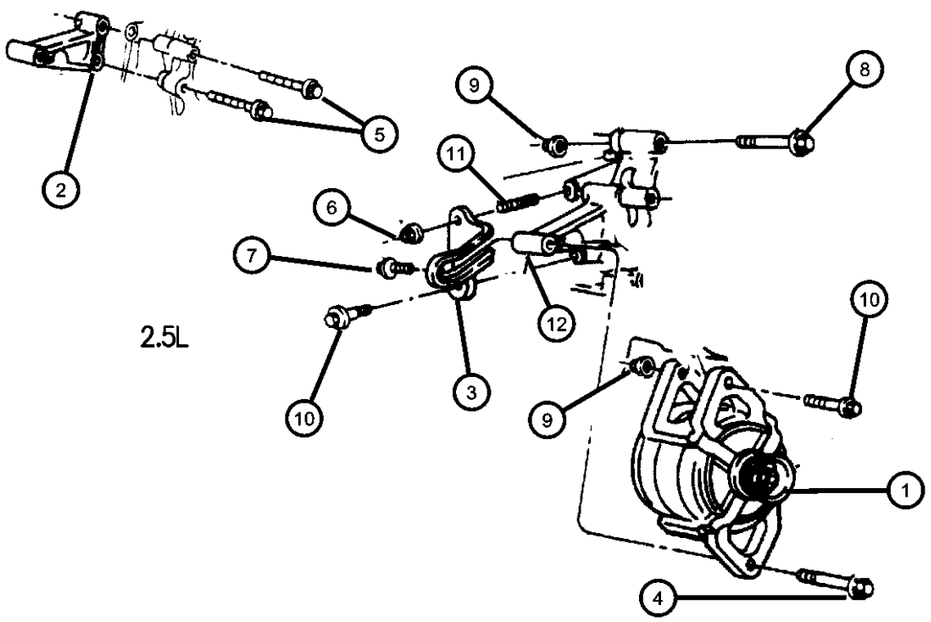

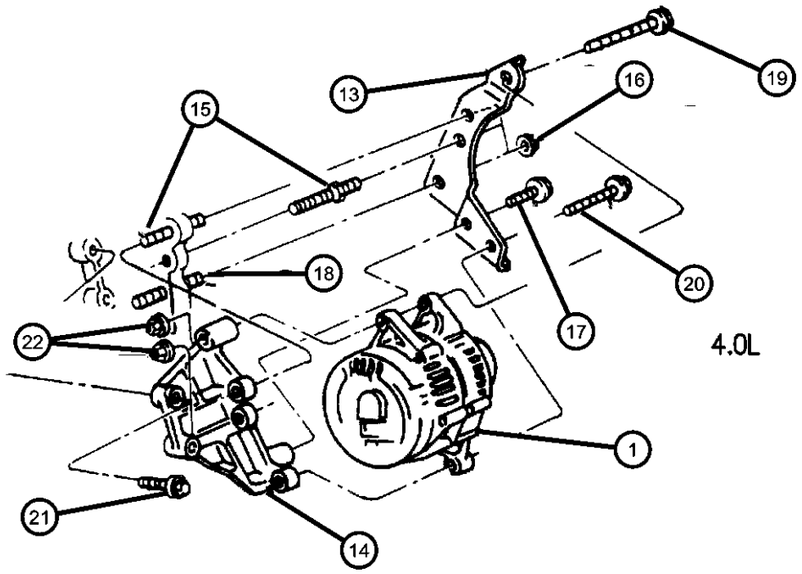

ITEM	PART NUMBER	QTY	LINE	SERIES	BODY	ENGINE	TRANS	TRIM	DESCRIPTION
17									SCREW AND WASHER, Hex Head, M10x1.5x25
	06502144	1	J, T			ER0			
		2	B, U			ER0			
18	06035744	1				ER0			STUD, .312-18/.375-16x2.875
19	06502143	1	B, U			EP0			BOLT, Hex Flange Head, M10x1.5-80
20	06502136	1	J, T			EP0			BOLT, Hex Flange Head, M10x1.50x55
21	J4007073	2							SCREW AND WASHER, .375-16x1.125
22									NUT, Hex Flange, M10x1.5
	06502135	1	J, T			ER0			
		1	B, U			ER0			

CHEROKEE (XJ)

SERIES	LINE	BODY	ENGINE	TRANSMISSION
L = LOWLINE	T = JEEP - 2WD B = JEEP - 2WD (RHD) J = JEEP - 4WD U = JEEP - 4WD (RHD)	72 = SPORT UTILITY 2-DR 74 = SPORT UTILITY 4-DR	ENC = 2.5L 4 Cyl Turbo Diesel Engine EPB = 2.5L 4 Cylinder Engine EPE = Engine - 2.5L Power Tech I-4 Cyl. ERH = 4.0L Power Tech I-6 Engine	DDQ = 5-Speed Manual Transmission DGS = 4-Speed Automatic AW4 Transmission DGO = ALL AUTOMATIC TRANSMISSIONS DBB = ALL MANUAL TRANSMISSIONS

AR = use ase required - = Non illustrrated part

Alternator Diesel Engine
Figure 8-210

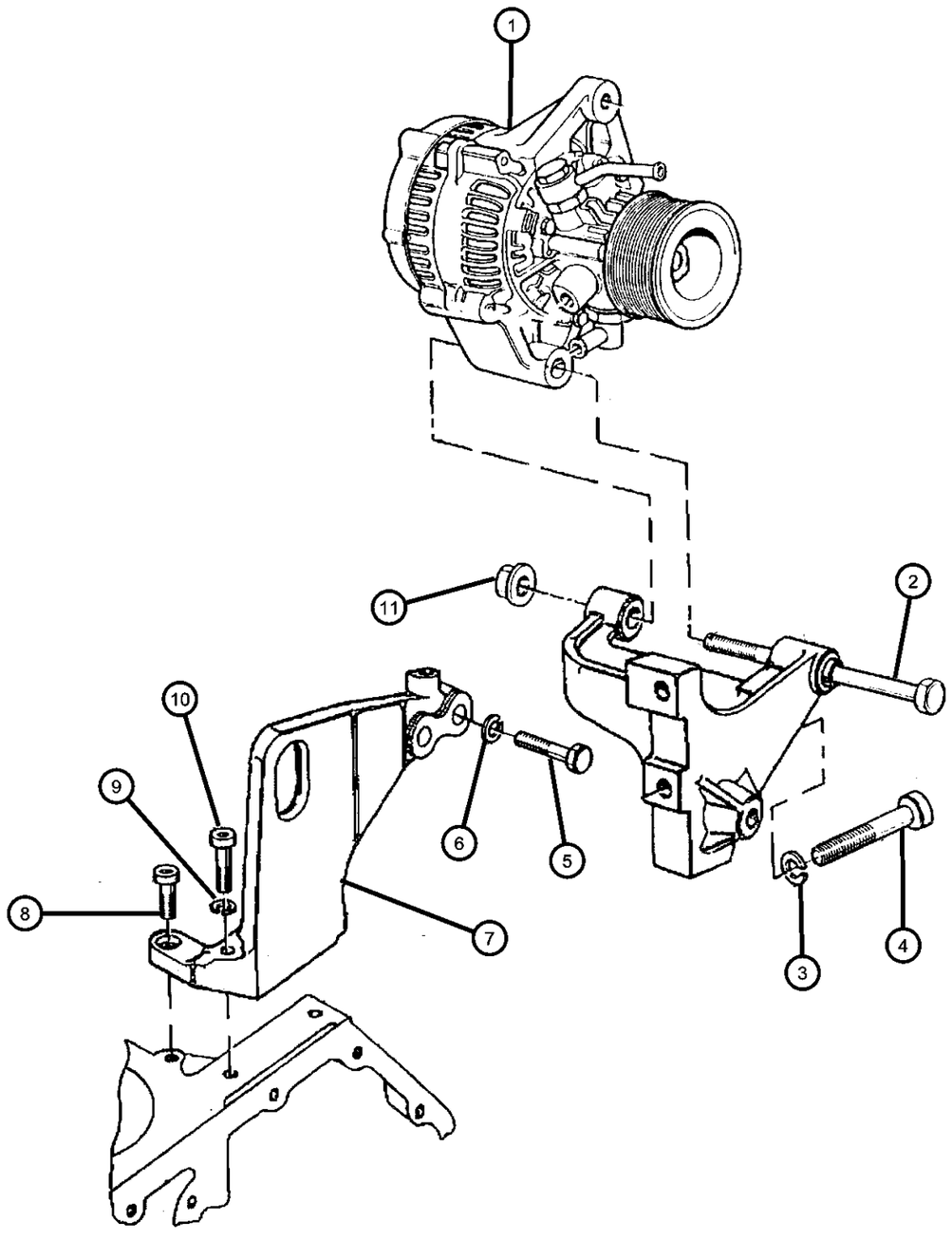

ITEM	PART NUMBER	QTY	LINE	SERIES	BODY	ENGINE	TRANS	TRIM	DESCRIPTION
EN0=4 Cylinder Turbo Diesel Engine DDQ=Manual Transmission 5 Speed									
1	04864441	1				EN0			ALTERNATOR
2	04796042	1				EN0			SCREW, Cap, M10x150
3	04864758	2				EN0			WASHER
4	04864757	2				EN0			BOLT
5	04723291	1				EN0			BOLT, Starter
6	04723165	3				EN0			WASHER, P Clip
7	04883519AA	1				EN0			BRACKET, Alternator
8	04720684	1				EN0			BOLT, Tow Hook
9									WASHER, Flat
	04210983	1	J			EN0	DDQ		
	04720688	6				EN0			
10	04797768	6				EN0			BOLT, Vacuum Pump Bracket, M10x35
11	04796038	1				EN0			NUT, Hex Flange, M10x1.5

CHEROKEE (XJ)

SERIES	LINE	BODY	ENGINE	TRANSMISSION
L = LOWLINE	T = JEEP - 2WD B = JEEP - 2WD (RHD) J = JEEP - 4WD U = JEEP - 4WD (RHD)	72 = SPORT UTILITY 2-DR 74 = SPORT UTILITY 4-DR	ENC = 2.5L 4 Cyl Turbo Diesel Engine EPB = 2.5L 4 Cylinder Engine EPE = Engine - 2.5L Power Tech I-4 Cyl. ERH = 4.0L Power Tech I-6 Engine	DDQ = 5-Speed Manual Transmission DGS = 4-Speed Automatic AW4 Transmission DGO = ALL AUTOMATIC TRANSMISSIONS DBB = ALL MANUAL TRANSMISSIONS

Distributor 2.5L Engine
Figure 8-305

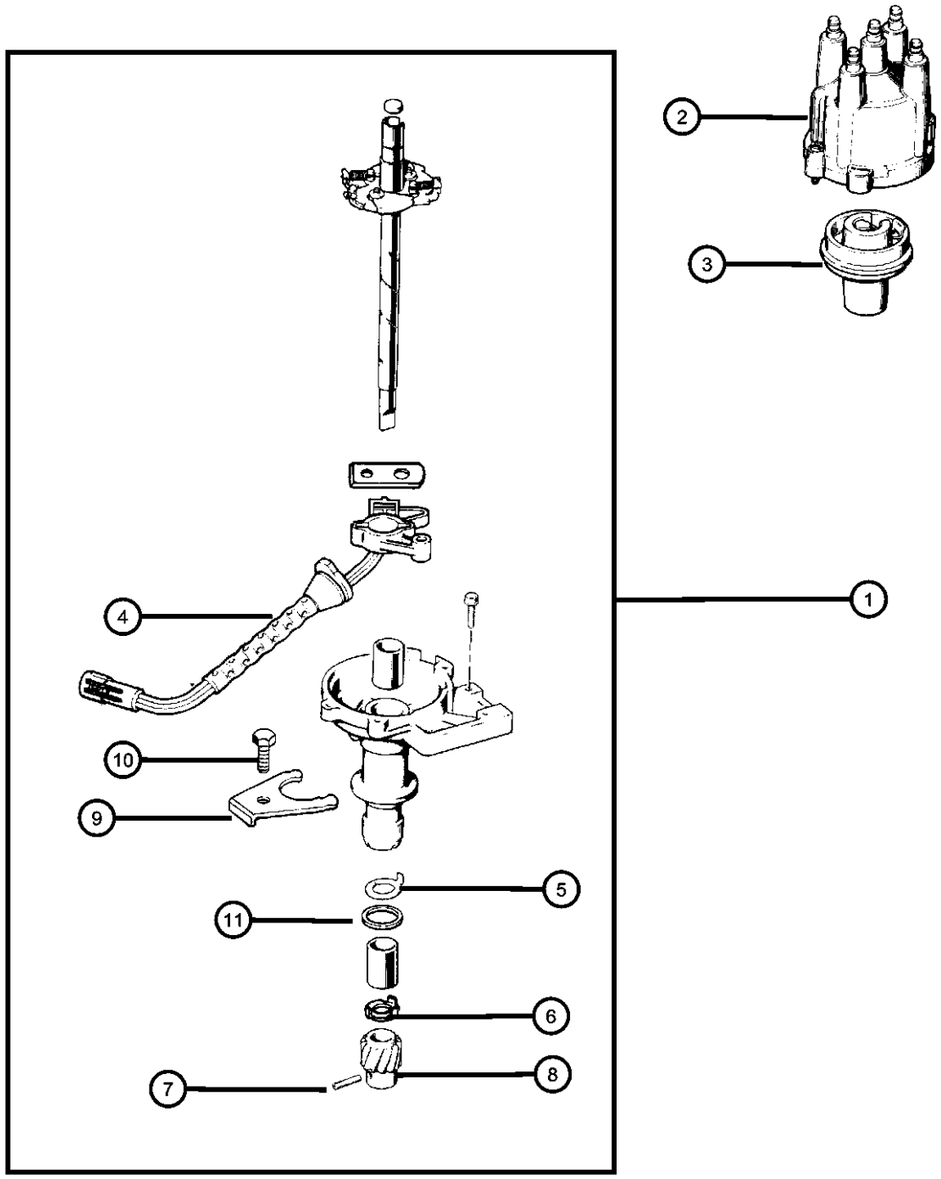

ITEM	PART NUMBER	QTY	LINE	SERIES	BODY	ENGINE	TRANS	TRIM	DESCRIPTION
EP0=2.5L Engine									
DGD=Automatic Transmission 3 Speed									
1	56027027AB	1				EP0			DISTRIBUTOR, Engine
2	53006152AB	1				EP0			CAP, Distributor
3	56027019	1				EP0			ROTOR, Distributor
4	56027023	1				EP0			SWITCHPLATE, Distributor
5	53009078	1				EP0			WASHER, Distributor Gear
6	33004594	1				EP0			WASHER, Distributor Gear
7	09422127	1				EP0			ROLL PIN, .19x.75
8	83504635	1				EP0			GEAR, Distributor Drive
9	33004242	1				EP0, ER0			CLAMP, Distributor
10	06033479	6	J, U			EP0	DGD		BOLT, Hex Head, .25-28x1-5/8
11	J3181288	1				EP0, ER0			GASKET, Distributor

CHEROKEE (XJ)

SERIES	LINE	BODY	ENGINE	TRANSMISSION
L = LOWLINE	T = JEEP - 2WD B = JEEP - 2WD (RHD) J = JEEP - 4WD U = JEEP - 4WD (RHD)	72 = SPORT UTILITY 2-DR 74 = SPORT UTILITY 4-DR	ENC = 2.5L 4 Cyl Turbo Diesel Engine EPB = 2.5L 4 Cylinder Engine EPE = Engine - 2.5L Power Tech I-4 Cyl. ERH = 4.0L Power Tech I-6 Engine	DDQ = 5-Speed Manual Transmission DGS = 4-Speed Automatic AW4 Transmission DGO = ALL AUTOMATIC TRANSMISSIONS DBB = ALL MANUAL TRANSMISSIONS

Distributor 4.0L Engine
Figure 8-310

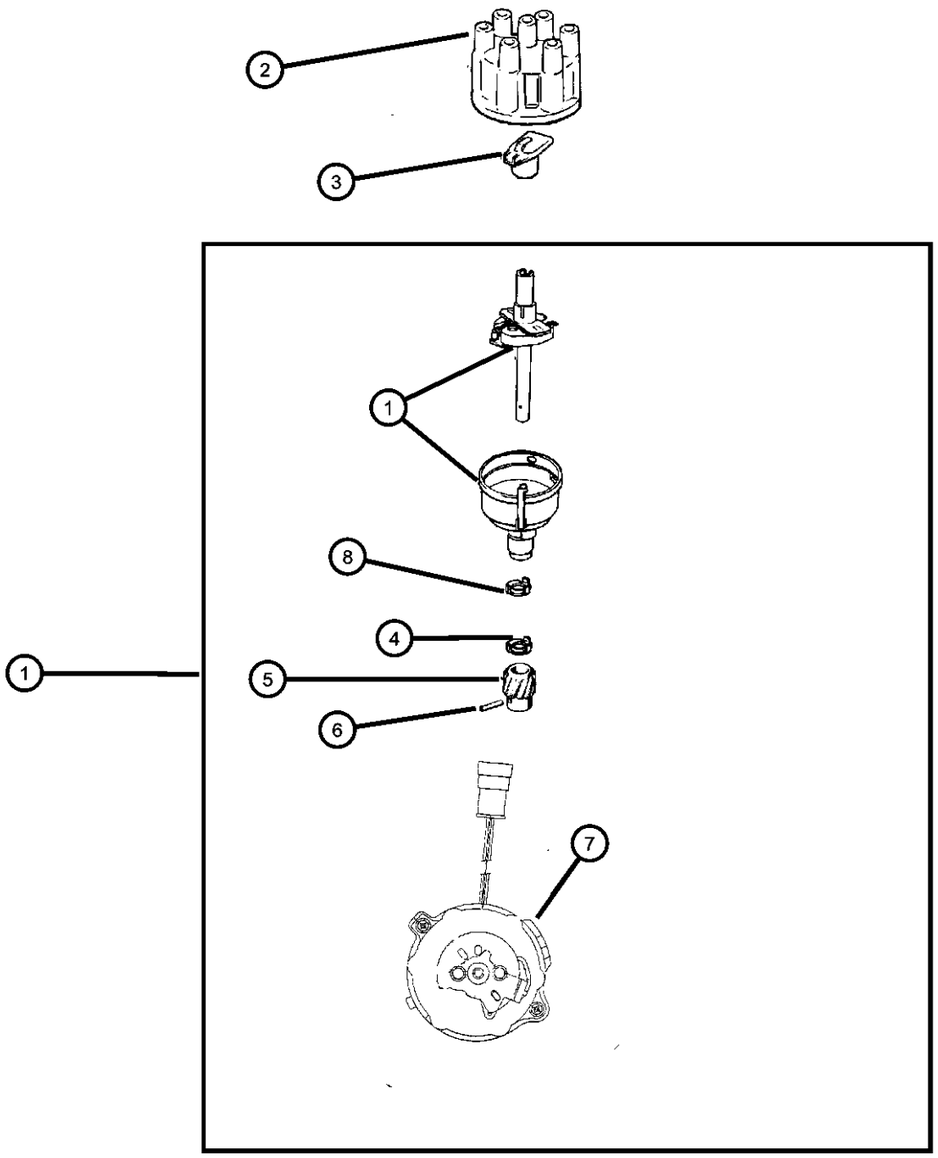

ITEM	PART NUMBER	QTY	LINE	SERIES	BODY	ENGINE	TRANS	TRIM	DESCRIPTION
ER0=4.0L Engine									
1	56027028	1				ER0			DISTRIBUTOR, Engine
2	56026876	1				ER0			CAP, Distributor
3	56027019	1				ER0			ROTOR, Distributor
4	33004594	1				ER0			WASHER, Distributor Gear
5	83504635	1				ER0			GEAR, Distributor Drive
6	09422127	1				ER0			ROLL PIN, .19x.75
7	56027023	1				ER0			SWITCHPLATE, Distributor
8	53009078	1				ER0			WASHER, Distributor Gear, Thrust Upper
-9	J3181288	1				EP0, ER0			GASKET, Distributor

CHEROKEE (XJ)

SERIES	LINE	BODY	ENGINE	TRANSMISSION
L = LOWLINE	T = JEEP - 2WD B = JEEP - 2WD (RHD) J = JEEP - 4WD U = JEEP - 4WD (RHD)	72 = SPORT UTILITY 2-DR 74 = SPORT UTILITY 4-DR	ENC = 2.5L 4 Cyl Turbo Diesel Engine EPB = 2.5L 4 Cylinder Engine EPE = Engine - 2.5L Power Tech I-4 Cyl. ERH = 4.0L Power Tech I-6 Engine	DDQ = 5-Speed Manual Transmission DGS = 4-Speed Automatic AW4 Transmission DGO = ALL AUTOMATIC TRANSMISSIONS DBB = ALL MANUAL TRANSMISSIONS

Modules
Figure 8-405

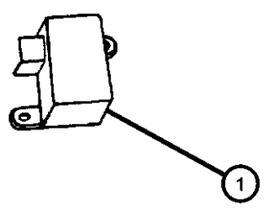

ITEM	PART NUMBER	QTY	LINE	SERIES	BODY	ENGINE	TRANS	TRIM	DESCRIPTION
[ER0]=4.0L Engine [DG0]=Automatic Transmission									
1	56004262	1							MODULE, Daytime Running Lamp
-2	56009324	1							MODULE, Headlamp Delay
-3	56027951	1				ER0	DG0		MODULE, Transmission Control
-4	56007323AB	1							MODULE, Air Bag Control
-5	05003478AA	1							MODULE, Security Alarm
-6	05003378AA	1							MODULE PACKAGE, Keyless Entry

CHEROKEE (XJ)

SERIES	LINE	BODY	ENGINE	TRANSMISSION
L = LOWLINE	T = JEEP - 2WD B = JEEP - 2WD (RHD) J = JEEP - 4WD U = JEEP - 4WD (RHD)	72 = SPORT UTILITY 2-DR 74 = SPORT UTILITY 4-DR	ENC = 2.5L 4 Cyl Turbo Diesel Engine EPB = 2.5L 4 Cylinder Engine EPE = Engine - 2.5L Power Tech I-4 Cyl. ERH = 4.0L Power Tech I-6 Engine	DDQ = 5-Speed Manual Transmission DGS = 4-Speed Automatic AW4 Transmission DGO = ALL AUTOMATIC TRANSMISSIONS DBB = ALL MANUAL TRANSMISSIONS

Relays
Figure 8-510

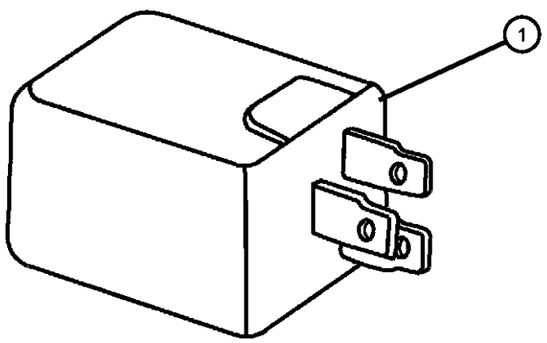

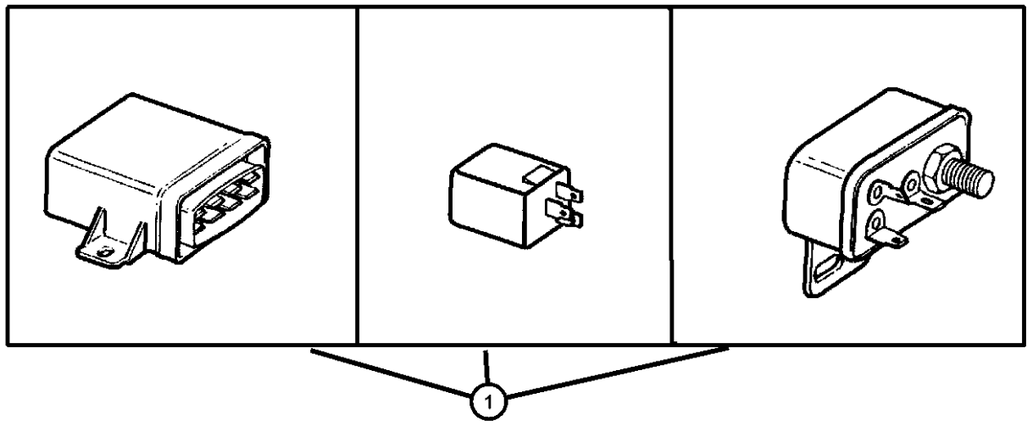

ITEM	PART NUMBER	QTY	LINE	SERIES	BODY	ENGINE	TRANS	TRIM	DESCRIPTION
EP0=2.5L Engine ER0=4.0L Engine ERH=4.0L Power Tech Engine DG0=Automatic Transmission DBB= Manual Transmission									
1	56007236AB	1				EN0			RELAY, Electrical, Glow Plug
-2	56009057	1							RELAY, Rear Fog Lamp
-3	56006846	2							RELAY, Electrical, Trailer Tow
-4	04638094	1							RELAY PACKAGE, Electrical, Horn, Fuel Heater, Cigar Lighter, Auto. Shut Down, Starter Motor, Heated Back Lite, Cooling Fan & Fuel Pump
-5	04671168	1							RELAY, Mini, A/C Relay& Fog Light
-6	56021551	1							FLASHER, Combo (USA/CANADA)
-7	56009711	1							FLASHER, Combo (EUROPE)
-8	04604235	1							BREAKER, Circuit

CHEROKEE (XJ)

SERIES	LINE	BODY	ENGINE	TRANSMISSION
L = LOWLINE	T = JEEP - 2WD B = JEEP - 2WD (RHD) J = JEEP - 4WD U = JEEP - 4WD (RHD)	72 = SPORT UTILITY 2-DR 74 = SPORT UTILITY 4-DR	ENC = 2.5L 4 Cyl Turbo Diesel Engine EPB = 2.5L 4 Cylinder Engine EPE = Engine - 2.5L Power Tech I-4 Cyl. ERH = 4.0L Power Tech I-6 Engine	DDQ = 5-Speed Manual Transmission DGS = 4-Speed Automatic AW4 Transmission DGO = ALL AUTOMATIC TRANSMISSIONS DBB = ALL MANUAL TRANSMISSIONS

Sensors
Figure 8-605

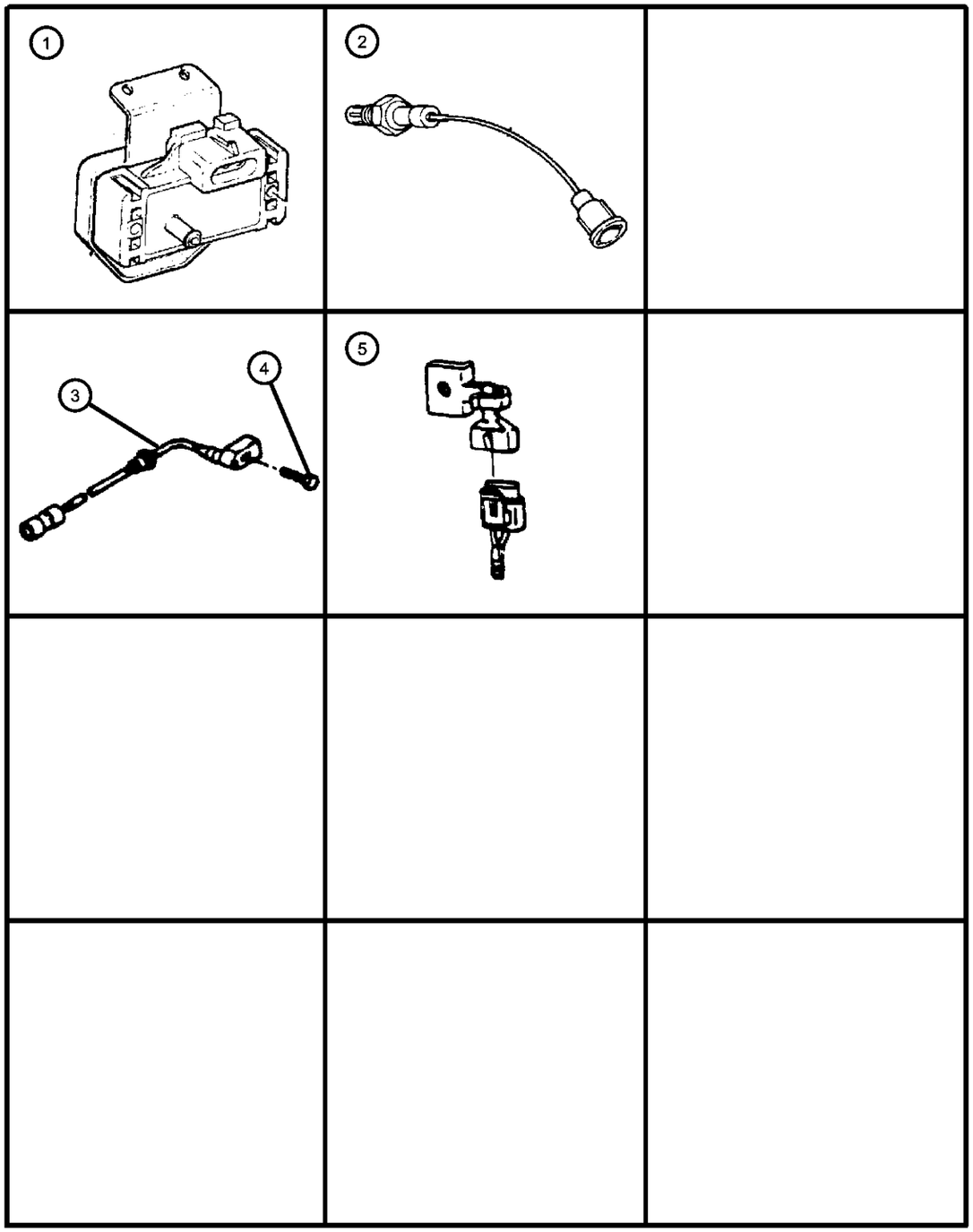

ITEM	PART NUMBER	QTY	LINE	SERIES	BODY	ENGINE	TRANS	TRIM	DESCRIPTION
[EP0]=2.5L Engine [ER0]=4.0L Engine [EN0]=4 Cylinder Turbo Diesel Engine [ENC]=2.5lL 4 Cylinder Turbo Diesel Engine [DGD]= Automatic Transmission 3 Speed [DGS] Automatic Transmission 4 Speed (AISIN) [DBB]= Manual Transmission									
1	56029405	1				EP0, ER0			SENSOR, MAP
2									SENSOR, Oxygen
	56027916	1				ER0			4.0L Engine Before Catalyst
	56027917	1				EP0			2.5L Engine Before Catalyst
	56041108	1				EP0, ER0			2.5L & 4.0L Engine After Catalyst
3									SENSOR, Anti-Lock Brakes
	52005932	1							Rear, Right
	52005933	1							Rear, Left
	56005217	2	U			ENC			Front Diesel (RHD)
		2	U						Front 4WD (RHD)
		2	J						Front 4WD (LHD)
		2	T						Front 2WD (LHD)
		2	B						Front 2WD (RHD)
		2	J			ENC			Front Diesel (LHD)
	56027727	2	J						Front with 3.0 Axle Ratio
4	83504920	2							BOLT
5	04688204AB	1							SENSOR, Ambient Temperature, with Overhead Console
-6	56009026AB	1							WIRING, Temperature Sensor Jumper, Ambient Temp Sensor
-7									BRACKET, Oxygen Sensor
	56027978	1				EP0, ER0			Before Catalyst
	56041000	1				EP0, ER0			After Catalyst
-8	56028183	1							SENSOR, Vehicle Speed
-9	56028182	1							O RING, Vehicle Speed Sensor (Blue)
-10									SENSOR, Crankshaft Position
	56027866AB	1				ER0			4.0L Engine
	56027867AB	1				EP0			2.5L Engine

CHEROKEE (XJ)

SERIES	LINE	BODY	ENGINE	TRANSMISSION
L = LOWLINE	T = JEEP - 2WD B = JEEP - 2WD (RHD) J = JEEP - 4WD U = JEEP - 4WD (RHD)	72 = SPORT UTILITY 2-DR 74 = SPORT UTILITY 4-DR	ENC = 2.5L 4 Cyl Turbo Diesel Engine EPB = 2.5L 4 Cylinder Engine EPE = Engine - 2.5L Power Tech I-4 Cyl. ERH = 4.0L Power Tech I-6 Engine	DDQ = 5-Speed Manual Transmission DGS = 4-Speed Automatic AW4 Transmission DGO = ALL AUTOMATIC TRANSMISSIONS DBB = ALL MANUAL TRANSMISSIONS

Sensors
Figure 8-605

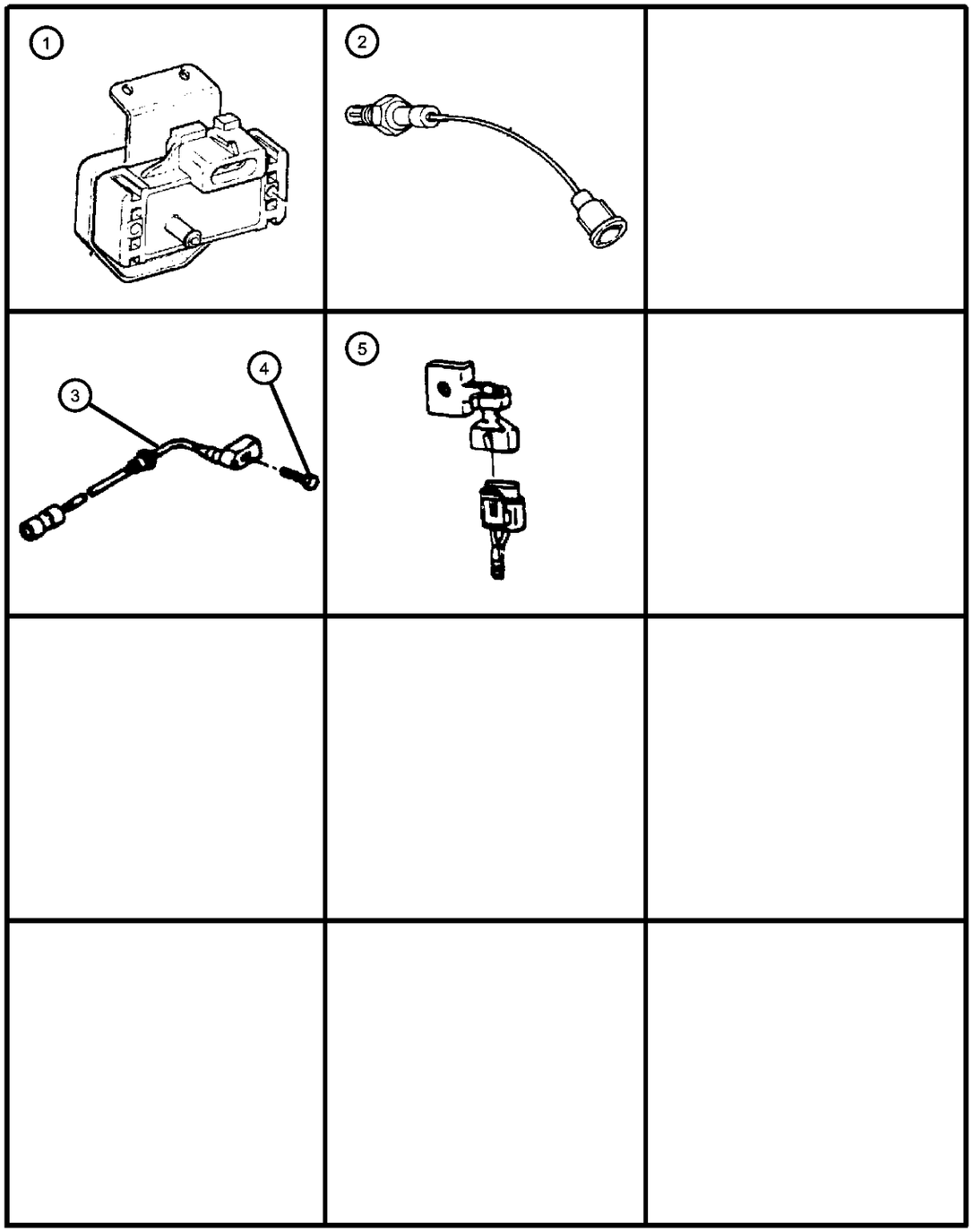

ITEM	PART NUMBER	QTY	LINE	SERIES	BODY	ENGINE	TRANS	TRIM	DESCRIPTION
-11									SENSOR PACKAGE, Throttle Position
	04863996	1				EP0			2.5L Engine
		1				ER0			4.0L Engine
-12	55154979	1							SENSOR, Washer Fluid Level
-13									SENSOR, Coolant Temperature
	04686192	1				EN0			Diesel
	56027873	1				EP0, ER0			2.5L & 4.0L Engine
-14									BRACKET, Brake Sensor
	52007804	1							Rear (Right)
	52007805	1							Rear (Left)
	56026996	1							Front (Right)
	56026997	1							Front (Left)
-15	56027963	1				EN0			SENSOR, Engine Electric Control
-16	34202536	2				EP0	DGD		STUD, .312-18x2.26, Crank Sensor Mounting
-17	04863824	1				EN0			SENSOR, Temperature Sending Unit
-18	04883258	1				EN0			SENSOR PACKAGE, Air Flow Meter

CHEROKEE (XJ)

SERIES	LINE	BODY	ENGINE	TRANSMISSION
L = LOWLINE	T = JEEP - 2WD B = JEEP - 2WD (RHD) J = JEEP - 4WD U = JEEP - 4WD (RHD)	72 = SPORT UTILITY 2-DR 74 = SPORT UTILITY 4-DR	ENC = 2.5L 4 Cyl Turbo Diesel Engine EPB = 2.5L 4 Cylinder Engine EPE = Engine - 2.5L Power Tech I-4 Cyl. ERH = 4.0L Power Tech I-6 Engine	DDQ = 5-Speed Manual Transmission DGS = 4-Speed Automatic AW4 Transmission DGO = ALL AUTOMATIC TRANSMISSIONS DBB = ALL MANUAL TRANSMISSIONS

Single Board Engine Controllers
Figure 8-710

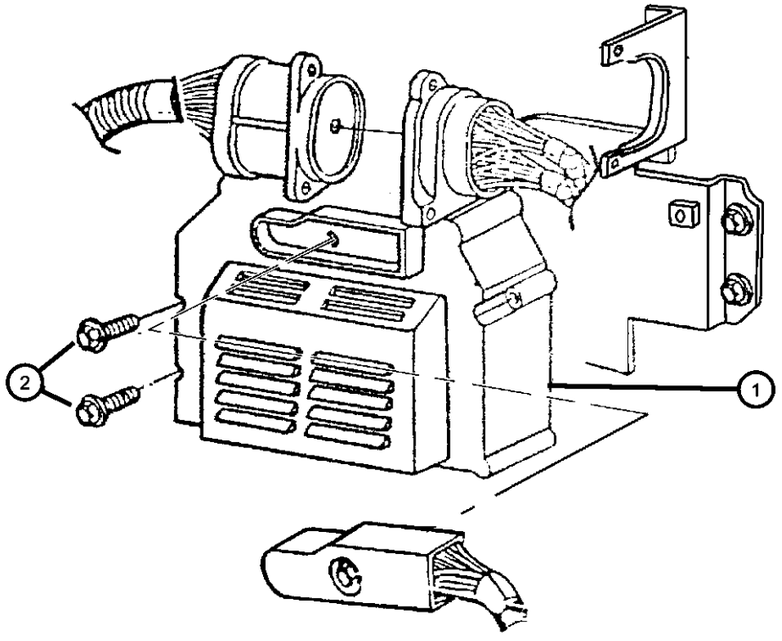

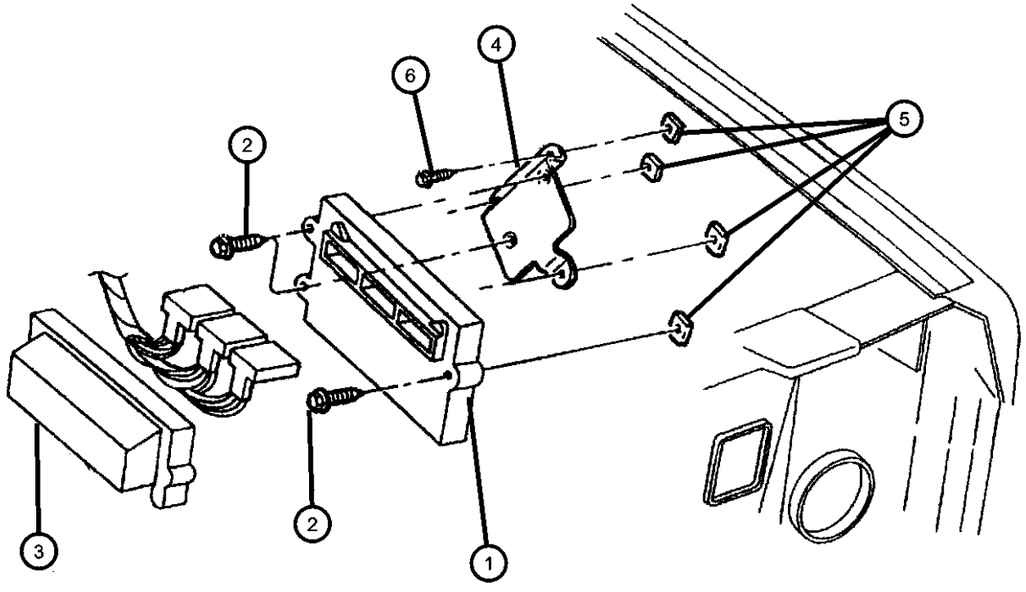

ITEM	PART NUMBER	QTY	LINE	SERIES	BODY	ENGINE	TRANS	TRIM	DESCRIPTION
EP0=2.5L Engine ER0=4.0L Engine ERH=4.0L Power Tech Engine EN0=4 Cylinder Turbo Diesel Engine ENC=2.5lL 4 Cylinder Turbo Diesel Engine DG0=Automatic Transmission DGD= Automatic Transmission 3 Speed DGS Automatic Transmission 4 Speed (AISIN) DBB= Manual Transmission									
1									MODULE, Powertrain Control
	56041268AD	1				EP0	DBB		2.5L Engine w/Manual Transmission & Federal/California Emission
	56041269AD	1				EP0	DBB		2.5L Engine w/Manual Transmission, Export Package & California/Export Emission
	56041270AD	1				EP0	DBB		2.5L Engine w/Manual Transmissio & Leaded Fuel
	56041271AD	1				EP0	DG0		2.5L Engine w/Automatic Transmission & Federal/California Emission
	56041272AD	1				EP0	DG0		2.5L Engine w/Automatic Transmission, Export Package & California/Export Emission
	56041273AD	1				EP0	DG0		2.5L Engine w/Automatic Transmission & Leaded Fuel
	56041274AD	1				ER0	DBB		4.0L Engine w/Manual Transmission & Federal/California Emission
	56041275AD	1				ER0	DBB		4.0L Engine w/Manual Transmission, Export Package & California/Export Package
	56041276AD	1				ER0	DBB		4.0L Engine w/Manual Transmission & Leaded Fuel
	56041277AD	1				ER0	DG0		4.0L Engine w/Automatic Transmission & Federal Emission
	56041278AD	1				ER0	DG0		4.0L Engine w/Automatic Transmission, Export Package & california/Export Emission
	56041279AD	1				ER0	DG0		4.0L Engine w/Automatic Transmission & Leaded Fuel
	56041280AD	1	J, U			ER0	DG0		4.0L Engine w/California Emission (RHD)
	56041707AB	1				EN0	DBB		Diesel Engine
2	56041707AB	1							SCREW, (NOT SERVICED),

CHEROKEE (XJ)

SERIES	LINE	BODY	ENGINE	TRANSMISSION
L = LOWLINE	T = JEEP - 2WD B = JEEP - 2WD (RHD) J = JEEP - 4WD U = JEEP - 4WD (RHD)	72 = SPORT UTILITY 2-DR 74 = SPORT UTILITY 4-DR	ENC = 2.5L 4 Cyl Turbo Diesel Engine EPB = 2.5L 4 Cylinder Engine EPE = Engine - 2.5L Power Tech I-4 Cyl. ERH = 4.0L Power Tech I-6 Engine	DDQ = 5-Speed Manual Transmission DGS = 4-Speed Automatic AW4 Transmission DGO = ALL AUTOMATIC TRANSMISSIONS DBB = ALL MANUAL TRANSMISSIONS

Single Board Engine Controllers
Figure 8-710

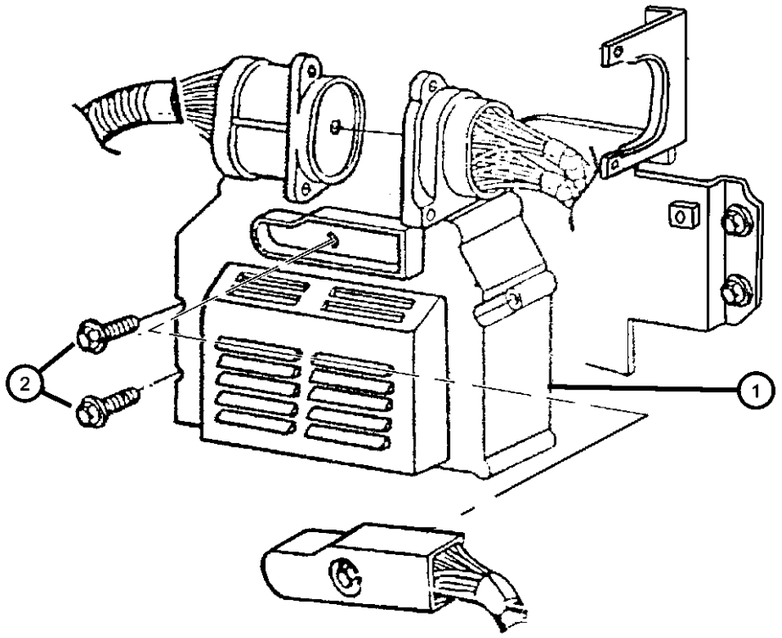

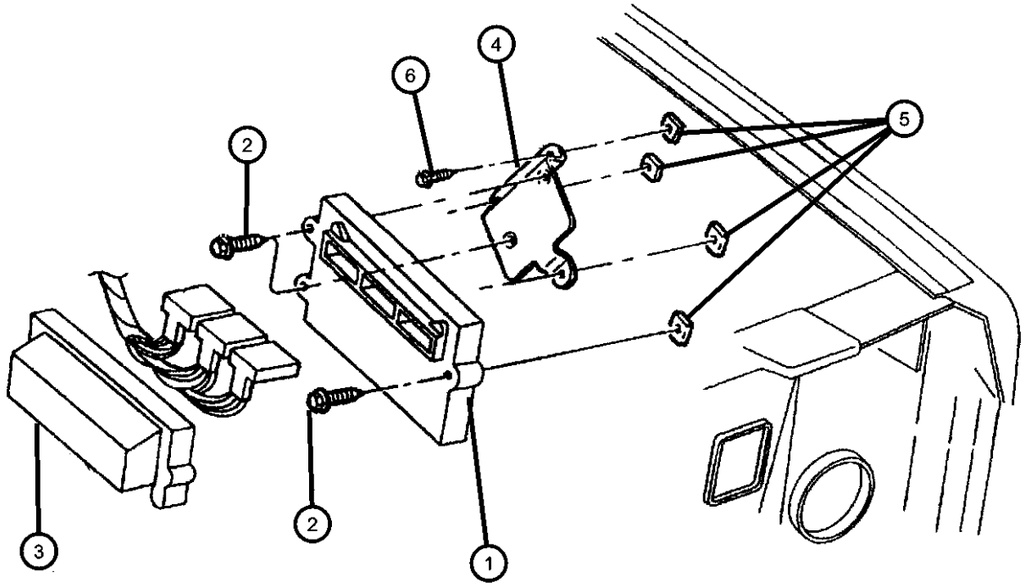

ITEM	PART NUMBER	QTY	LINE	SERIES	BODY	ENGINE	TRANS	TRIM	DESCRIPTION
3	56041707AB	1							COVER, Module, (NOT SERVICED)
4									BRACKET, Module
	56027252	1				EN0			
	56041067	1	J, T			EP0, ER0			
5	J4004959	4							NUT, Snap In, .19
6	00154552	3				EN0			SCREW, Hex Head, .190-16x.625
-7	04882087	AR							WIRING REPAIR PACKAGE, Powertrain Control Module, See TSB8-01-97 Page 4

CHEROKEE (XJ)

SERIES	LINE	BODY	ENGINE	TRANSMISSION
L = LOWLINE	T = JEEP - 2WD B = JEEP - 2WD (RHD) J = JEEP - 4WD U = JEEP - 4WD (RHD)	72 = SPORT UTILITY 2-DR 74 = SPORT UTILITY 4-DR	ENC = 2.5L 4 Cyl Turbo Diesel Engine EPB = 2.5L 4 Cylinder Engine EPE = Engine - 2.5L Power Tech I-4 Cyl. ERH = 4.0L Power Tech I-6 Engine	DDQ = 5-Speed Manual Transmission DGS = 4-Speed Automatic AW4 Transmission DGO = ALL AUTOMATIC TRANSMISSIONS DBB = ALL MANUAL TRANSMISSIONS

AR = use ase required - = Non illustrrated part

Switches & Sending Units
Figure 8-810

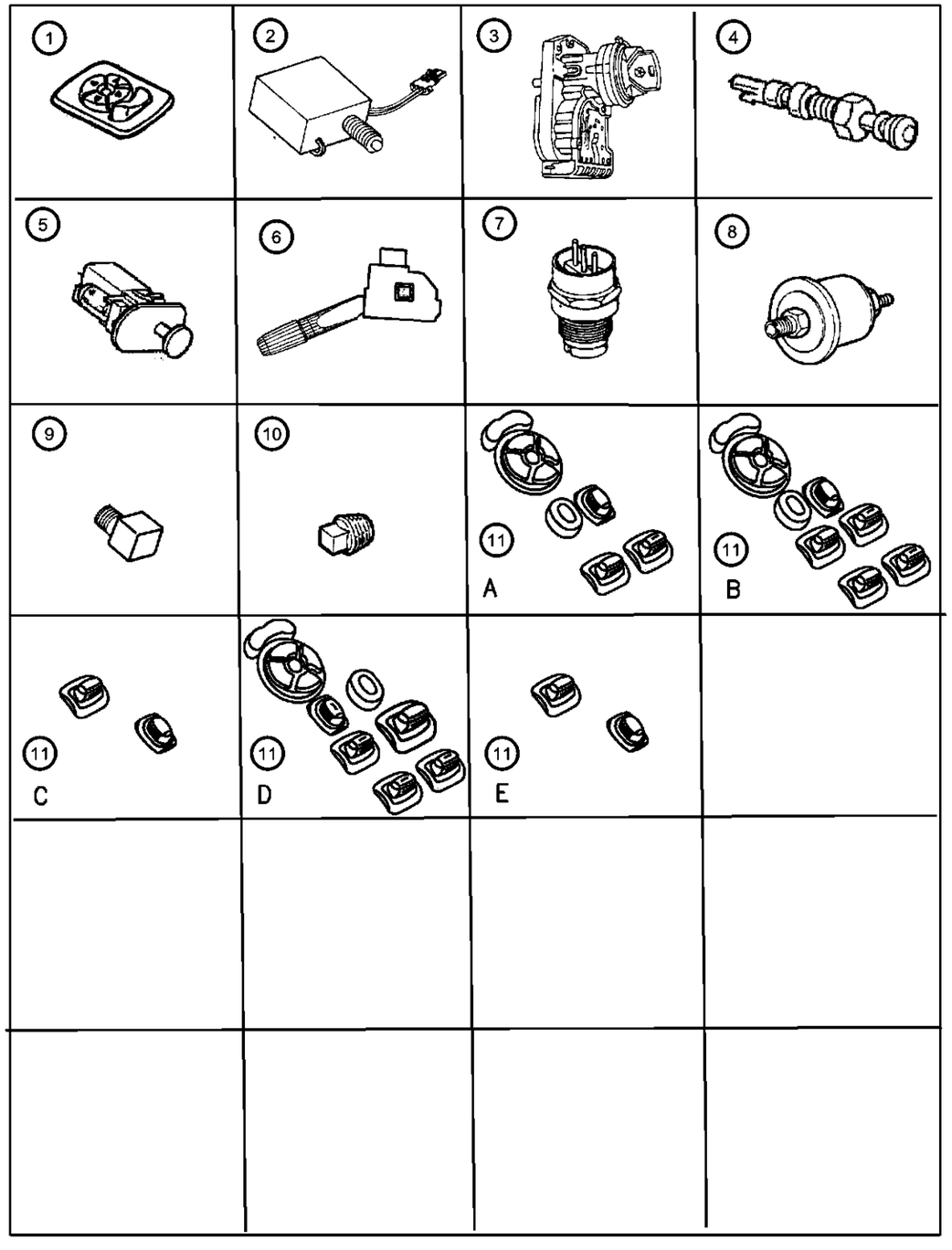

ITEM	PART NUMBER	QTY	LINE	SERIES	BODY	ENGINE	TRANS	TRIM	DESCRIPTION
1	56007678AB	1							SWITCH, Mirror
2	04671336	1							SWITCH, Stop Lamp
3	04565326	1					DBB		SWITCH, Ignition
4									SWITCH, Door Ajar
	04373296	1							Front RH
		1							Front LH
		2			74				Rear
5	04565022	1							SWITCH AND LAMP, Glove Box
6									SWITCH, Multifunction
	56009135	1	B		72		DG0		
		1	B		74		DG0		
		1	J		72		DG0		
		1	J		74		DG0		
		1	T		72		DG0		
		1	T		74		DG0		
		1	U		72		DG0		
		1	U		74		DG0		
7									SWITCH, Neutral, Safety, Back Up
	03747361	1	J, U			EP0	DGD		
	04882173	1	B			ER0	DGS		
		1	J			ER0	DGS		
		1	B, T			ER0	DGS		
		1	J, U			ER0	DGS		
8									SENDING UNIT, Oil Pressure
	56031003	1				EN0			Diesel Engine
		1				EP0, ER0			2.5L & 4.0L Engine
9									ELBOW, Oil Gauge Sending Unit
	J0934001	1				EP0			2.5l L Engine
	J3212002	1				ER0			4.0L Engine
10	J0103877	1				EP0, ER0			PLUG, Square Head, 1/8-27NPTx.32
11									SWITCH, Window and Door Lock
	56009449AB	1	J, T		74				Left Hand Drive, Power Mirrors, Power Window & Power Locks

CHEROKEE (XJ)

SERIES	LINE	BODY	ENGINE	TRANSMISSION
L = LOWLINE	T = JEEP - 2WD B = JEEP - 2WD (RHD) J = JEEP - 4WD U = JEEP - 4WD (RHD)	72 = SPORT UTILITY 2-DR 74 = SPORT UTILITY 4-DR	ENC = 2.5L 4 Cyl Turbo Diesel Engine EPB = 2.5L 4 Cylinder Engine EPE = Engine - 2.5L Power Tech I-4 Cyl. ERH = 4.0L Power Tech I-6 Engine	DDQ = 5-Speed Manual Transmission DGS = 4-Speed Automatic AW4 Transmission DGO = ALL AUTOMATIC TRANSMISSIONS DBB = ALL MANUAL TRANSMISSIONS

Switches & Sending Units
Figure 8-810

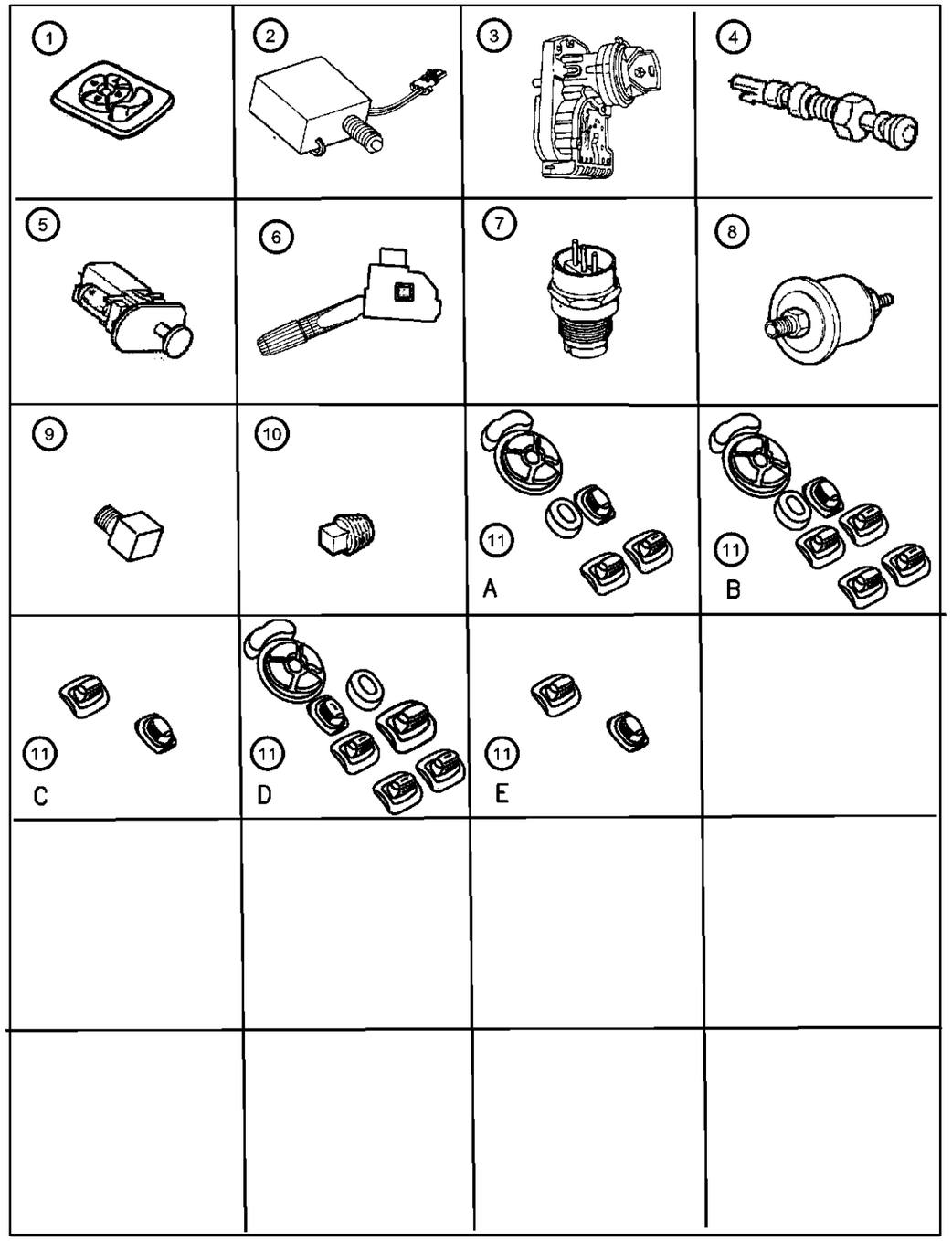

ITEM	PART NUMBER	QTY	LINE	SERIES	BODY	ENGINE	TRANS	TRIM	DESCRIPTION
	56009450AB	1	J, T		72				Left Hand Drive, Power Window & Power Locks
	56009451AB	1	J, T		74				Right Front Door
		1	J, T		72				Right Front Door
	56009512AB	1	B, U		74				Right, Right Hand Drive, Power Mirror, Power Window & Power Locks
	56009571AB	1	B, U		74				Left, Right Hand Drive, Power Window & Power Locks
-12	56007695	1			74				SWITCH, Power Window, Single Gang Switch, Door
-13	56007249	1							SWITCH, Wiper and Washer, Rear
-14									SWITCH, Speed Control
	56007530AB	1							Right
	56007531AB	1							Left
-15	56007250	1							SWITCH, Electric Back Light
-16									SWITCH, Headlamp
	05269478	1							Right Hand Drive
	56009869AA	1							Left Hand Drive
-17	56009376	1							KNOB AND SHAFT, Headlamp Switch
-18	56021893AA	1							RETAINER, Headlamp Switch
-19	56007675AB	1							SWITCH, Headlamp Leveling
-20	04793313	1					DG0		SWITCH, Intermittent Wiper
-21	56008728	1							SWITCH, Extended Idle
-22	52127960	1							SWITCH, Parking Brake
-23	56009136	1							SWITCH, Liftgate
-24									SWITCH, Fog Lamp
	56007247	1							Front
	56007248	1	J, U						Rear
-25	05066442AA	1							WIRING REPAIR PACKAGE, Fog Lamp

CHEROKEE (XJ)

SERIES	LINE	BODY	ENGINE	TRANSMISSION
L = LOWLINE	T = JEEP - 2WD B = JEEP - 2WD (RHD) J = JEEP - 4WD U = JEEP - 4WD (RHD)	72 = SPORT UTILITY 2-DR 74 = SPORT UTILITY 4-DR	ENC = 2.5L 4 Cyl Turbo Diesel Engine EPB = 2.5L 4 Cylinder Engine EPE = Engine - 2.5L Power Tech I-4 Cyl. ERH = 4.0L Power Tech I-6 Engine	DDQ = 5-Speed Manual Transmission DGS = 4-Speed Automatic AW4 Transmission DGO = ALL AUTOMATIC TRANSMISSIONS DBB = ALL MANUAL TRANSMISSIONS

Horns
Figure 8-910

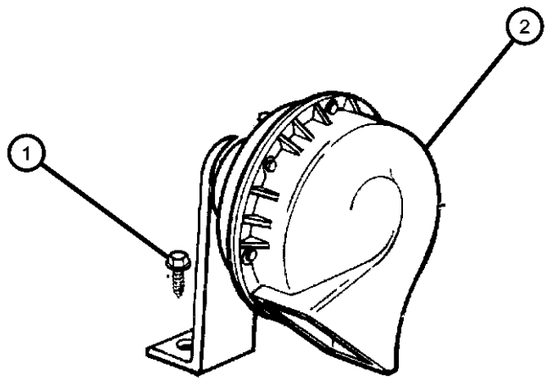

ITEM	PART NUMBER	QTY	LINE	SERIES	BODY	ENGINE	TRANS	TRIM	DESCRIPTION
[EP0]=2.5L Engine [ER0]=4.0L Engine [ENC]=2.5lL 4 Cylinder Turbo Diesel Engine [DDQ]=Manual Transmission 5 Speed									
1	34202606	1				ENC	DDQ		BOLT, Hex Head
2	56009614	1							HORN, High Note
-3	56009573	1							HORN, Low Note
-4	34202608	2							SCREW AND WASHER, Hex

CHEROKEE (XJ)

SERIES	LINE	BODY	ENGINE	TRANSMISSION
L = LOWLINE	T = JEEP - 2WD B = JEEP - 2WD (RHD) J = JEEP - 4WD U = JEEP - 4WD (RHD)	72 = SPORT UTILITY 2-DR 74 = SPORT UTILITY 4-DR	ENC = 2.5L 4 Cyl Turbo Diesel Engine EPB = 2.5L 4 Cylinder Engine EPE = Engine - 2.5L Power Tech I-4 Cyl. ERH = 4.0L Power Tech I-6 Engine	DDQ = 5-Speed Manual Transmission DGS = 4-Speed Automatic AW4 Transmission DGO = ALL AUTOMATIC TRANSMISSIONS DBB = ALL MANUAL TRANSMISSIONS

Battery Tray
Figure 8-1005

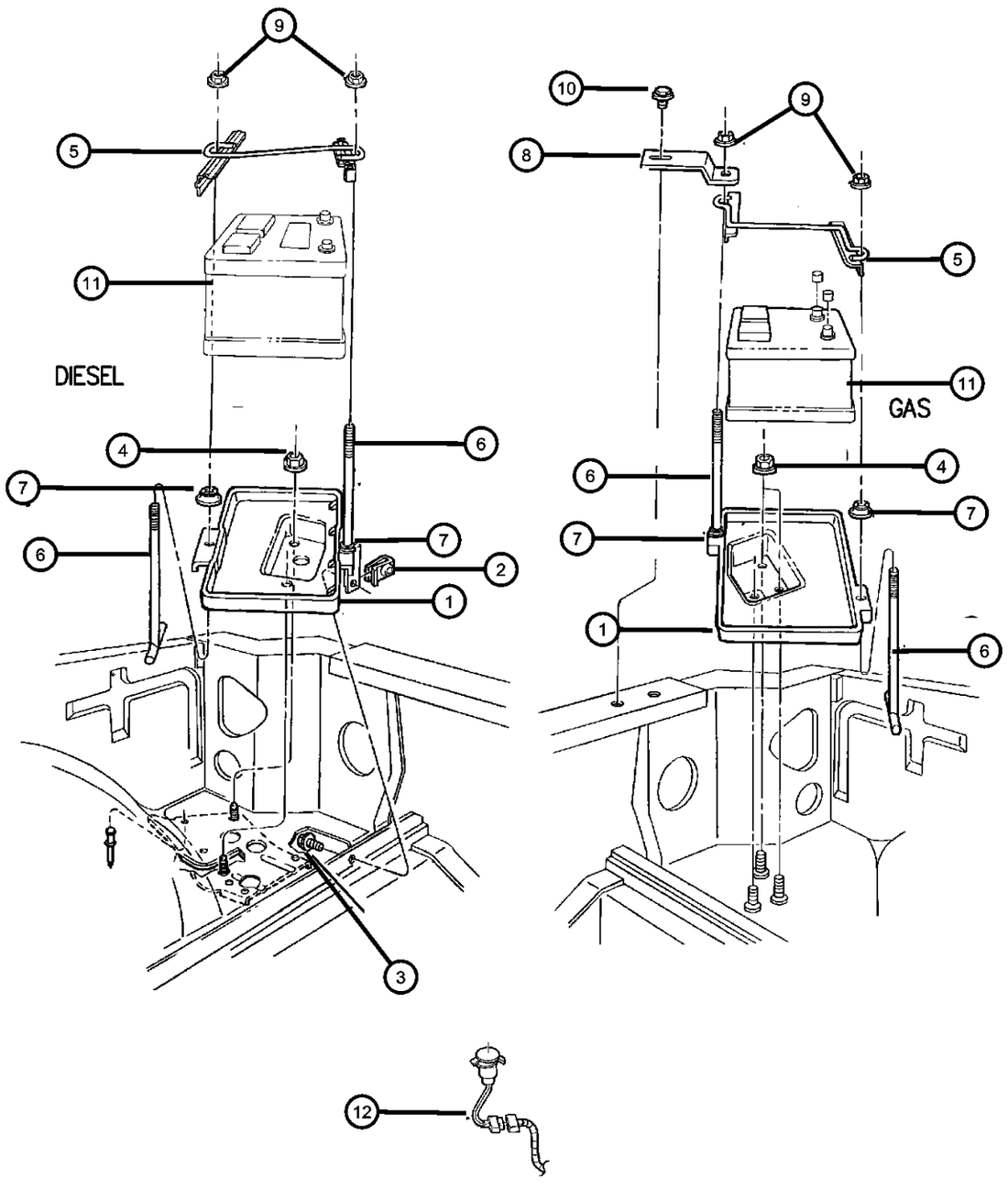

ITEM	PART NUMBER	QTY	LINE	SERIES	BODY	ENGINE	TRANS	TRIM	DESCRIPTION
EP0=2.5L Engine ER0=4.0L Engine EN0=4 Cylinder Turbo Diesel Engine									
1									TRAY, Battery
	55174970	1				EN0			Diesel Engine
	55235294	1				EP0, ER0			Gasoline Engine
2	55235294	1							NUT, U Type Multi Thread, M8 x 1.25, (NOT SERVICED),
3	11502693	1				EN0			BOLT, Hex Flange Head, M8-1.25x20.0
4	11502693	1							NUT AND CONED WASHER, M8x1.25, (NOT SERVICED)
5									BRACKET, Battery Hold Down
	55010722	1				EP0, ER0			Gasoline Engine
	55011012	1				EN0			Diesel Engine
6	55014375	2							BOLT, J, M8x1.25x192
7	55014375	2							RETAINER, Battery Hold Down, (NOT SERVICED)
8	55346107	1				EP0, ER0			STRAP, Battery
9	06101809	2							NUT AND WASHER, Hex, M8x1.25
10	06101455	1							SCREW AND WASHER, Hex Head, M6x1x20
11									COVER, Battery
	55176267	1				EN0			Diesel Engine
	56041001	1				EP0, ER0			Gasoline Engine
12	56027332	1				EP0, ER0			SENSOR, Battery Temperature

CHEROKEE (XJ)

SERIES	LINE	BODY	ENGINE	TRANSMISSION
L = LOWLINE	T = JEEP - 2WD B = JEEP - 2WD (RHD) J = JEEP - 4WD U = JEEP - 4WD (RHD)	72 = SPORT UTILITY 2-DR 74 = SPORT UTILITY 4-DR	ENC = 2.5L 4 Cyl Turbo Diesel Engine EPB = 2.5L 4 Cylinder Engine EPE = Engine - 2.5L Power Tech I-4 Cyl. ERH = 4.0L Power Tech I-6 Engine	DDQ = 5-Speed Manual Transmission DGS = 4-Speed Automatic AW4 Transmission DGO = ALL AUTOMATIC TRANSMISSIONS DBB = ALL MANUAL TRANSMISSIONS

Battery Cables
Figure 8-1010

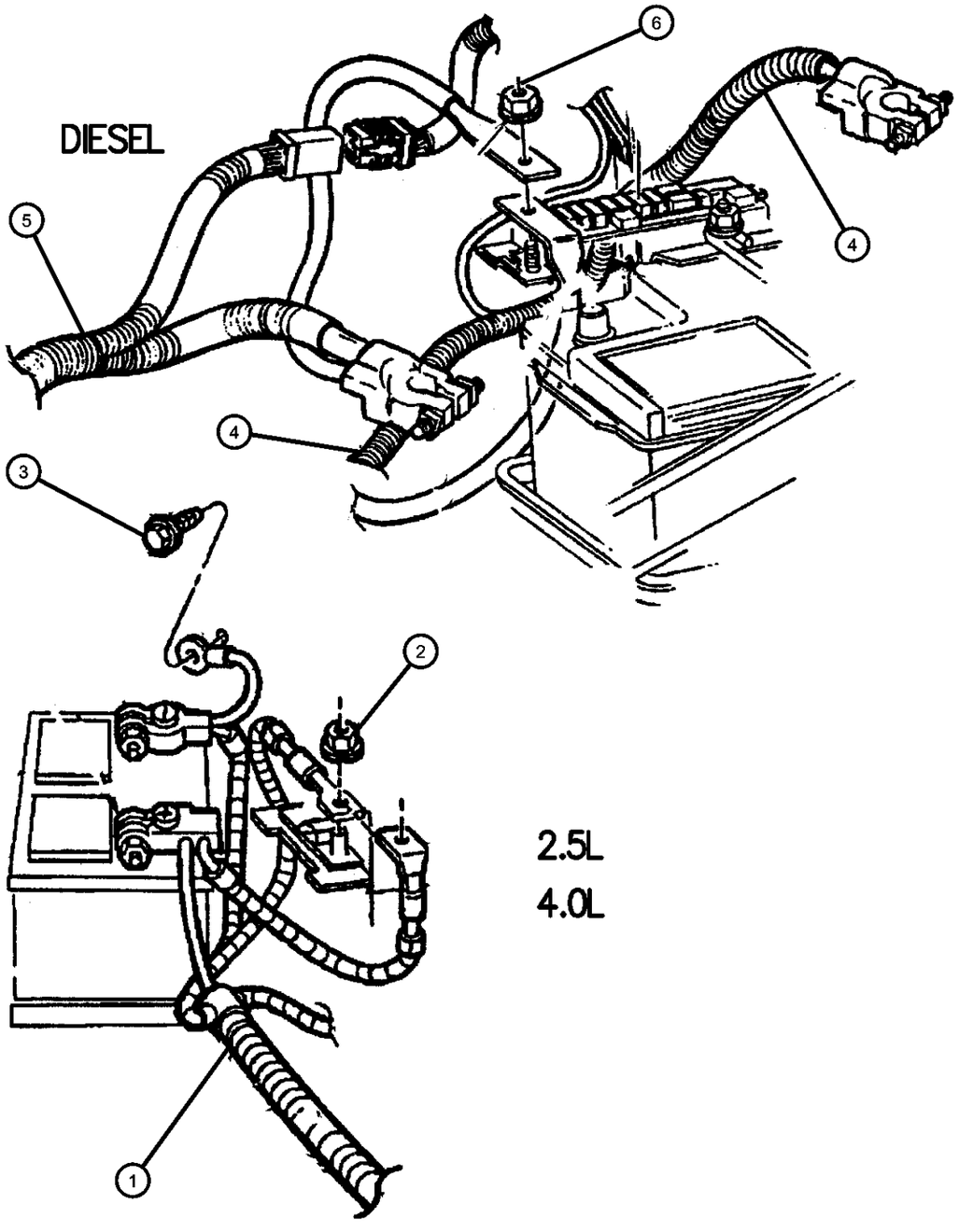

ITEM	PART NUMBER	QTY	LINE	SERIES	BODY	ENGINE	TRANS	TRIM	DESCRIPTION
EP0=2.5L Engine ER0=4.0L Engine ERH=4.0L Power Tech Engine EN0=4 Cylinder Turbo Diesel Engine ENC=2.5lL 4 Cylinder Turbo Diesel Engine									
1									WIRING, Battery
	56007641AB	1	B, U			EP0			
	56008818AB	1	J, T			EP0			
	56008836AB	1				ER0			
2	06035723	1				ER0			NUT AND WASHER, Hex Nut-E Teeth Washer, .312-18
3	00154554	1				ENC			SCREW, Self Piercing, .25-14x.625
4	56009074	1				EN0			WIRING, Battery Negative
5	56009073	1				EN0			WIRING, Battery Positive
6									NUT, Hex Flange Lock, M6x1
	06502691	3	J, T			EPE, ERH			
		3	B, U			ERH			

CHEROKEE (XJ)

SERIES	LINE	BODY	ENGINE	TRANSMISSION
L = LOWLINE	T = JEEP - 2WD B = JEEP - 2WD (RHD) J = JEEP - 4WD U = JEEP - 4WD (RHD)	72 = SPORT UTILITY 2-DR 74 = SPORT UTILITY 4-DR	ENC = 2.5L 4 Cyl Turbo Diesel Engine EPB = 2.5L 4 Cylinder Engine EPE = Engine - 2.5L Power Tech I-4 Cyl. ERH = 4.0L Power Tech I-6 Engine	DDQ = 5-Speed Manual Transmission DGS = 4-Speed Automatic AW4 Transmission DGO = ALL AUTOMATIC TRANSMISSIONS DBB = ALL MANUAL TRANSMISSIONS

Lamps Fog
Figure 8-1135

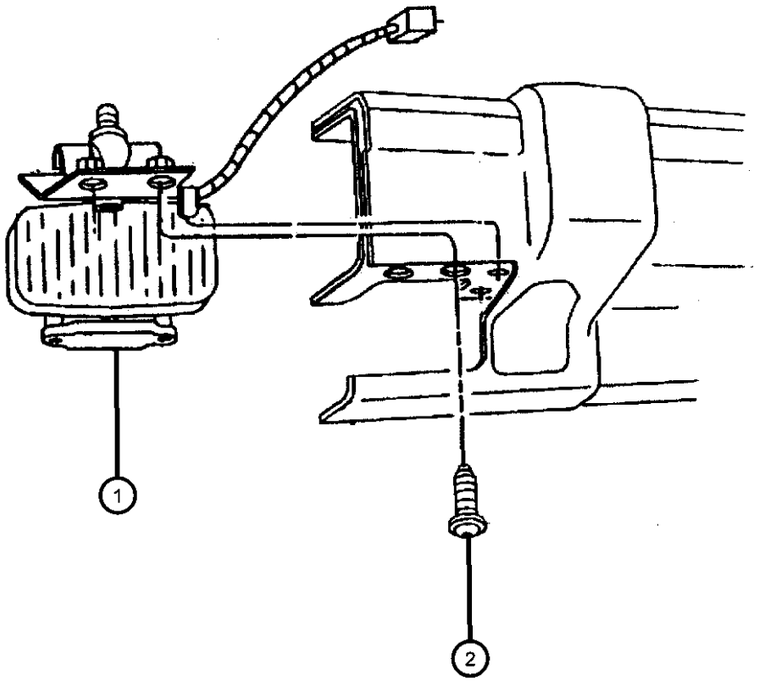

ITEM	PART NUMBER	QTY	LINE	SERIES	BODY	ENGINE	TRANS	TRIM	DESCRIPTION
1									LAMP AND BRACKET, Off Road Lamp
	55055274	1							Right
	55055275	1							Left
2	06503448	4							SCREW, Round Head, M8x1.25x30

CHEROKEE (XJ)

SERIES	LINE	BODY	ENGINE	TRANSMISSION
L = LOWLINE	T = JEEP - 2WD B = JEEP - 2WD (RHD) J = JEEP - 4WD U = JEEP - 4WD (RHD)	72 = SPORT UTILITY 2-DR 74 = SPORT UTILITY 4-DR	ENC = 2.5L 4 Cyl Turbo Diesel Engine EPB = 2.5L 4 Cylinder Engine EPE = Engine - 2.5L Power Tech I-4 Cyl. ERH = 4.0L Power Tech I-6 Engine	DDQ = 5-Speed Manual Transmission DGS = 4-Speed Automatic AW4 Transmission DGO = ALL AUTOMATIC TRANSMISSIONS DBB = ALL MANUAL TRANSMISSIONS

Lamps Front
Figure 8-1140

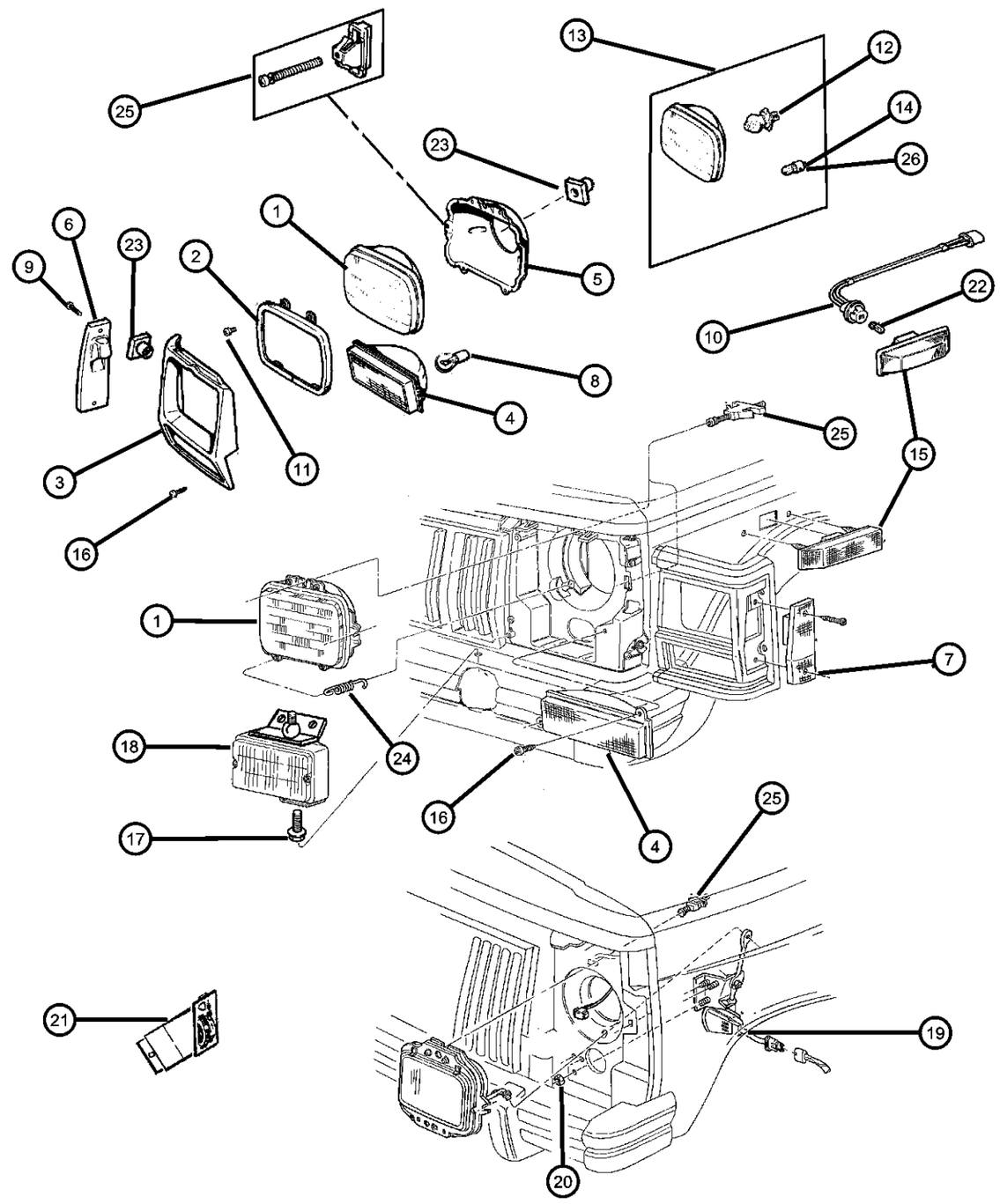

ITEM	PART NUMBER	QTY	LINE	SERIES	BODY	ENGINE	TRANS	TRIM	DESCRIPTION
1	L00H6054	1							BULB, Headlamp
2									RETAINER, Headlamp Bulb
	56001260	1	B, U						
		1	J, T						
3									BEZEL, Headlamp
	55055136	1							Black, Right
	55055137	1							Black, Left
	5EM72SW1	1							Paint as Required, Right
	5EM73SW1	1							Paint as Required, Left
4									LAMP, Park and Turn Signal
	55055142	1							Right
	55055143	1							Left
5									SEAT, Headlamp
	04897196AA	1	J, T						Halogen Headlam (Right) Export
	04897197AA	1	J, T						Halogen Headlam (Left) Export
	56001278	1							Halogen Lamp/White/ECE (Right)
	56001279	1							Halogen Lamp/White/ECE (Left)
6									LAMP, Side Marker
	55055146	1							Right
	55055147	1							Left
7									COVER, Side Marker Lamp
	55055148	1							Right
	55055149	1							Left
8	00154851AA	4							BULB, 3157
9									SCREW
	06504997AA	3	J, T						
		2	B, U						
10	56007685	2							WIRING, Turn Signal Lamp
11	34201821	2	J						SCREW, Pan Head, .164-18x.512
12									BULB, H4 Clear
	J3242537	1	B, U						
		1	J, T						
13									HEADLAMP

CHEROKEE (XJ)

SERIES	LINE	BODY	ENGINE	TRANSMISSION
L = LOWLINE	T = JEEP - 2WD B = JEEP - 2WD (RHD) J = JEEP - 4WD U = JEEP - 4WD (RHD)	72 = SPORT UTILITY 2-DR 74 = SPORT UTILITY 4-DR	ENC = 2.5L 4 Cyl Turbo Diesel Engine EPB = 2.5L 4 Cylinder Engine EPE = Engine - 2.5L Power Tech I-4 Cyl. ERH = 4.0L Power Tech I-6 Engine	DDQ = 5-Speed Manual Transmission DGS = 4-Speed Automatic AW4 Transmission DGO = ALL AUTOMATIC TRANSMISSIONS DBB = ALL MANUAL TRANSMISSIONS

Lamps Front
Figure 8-1140

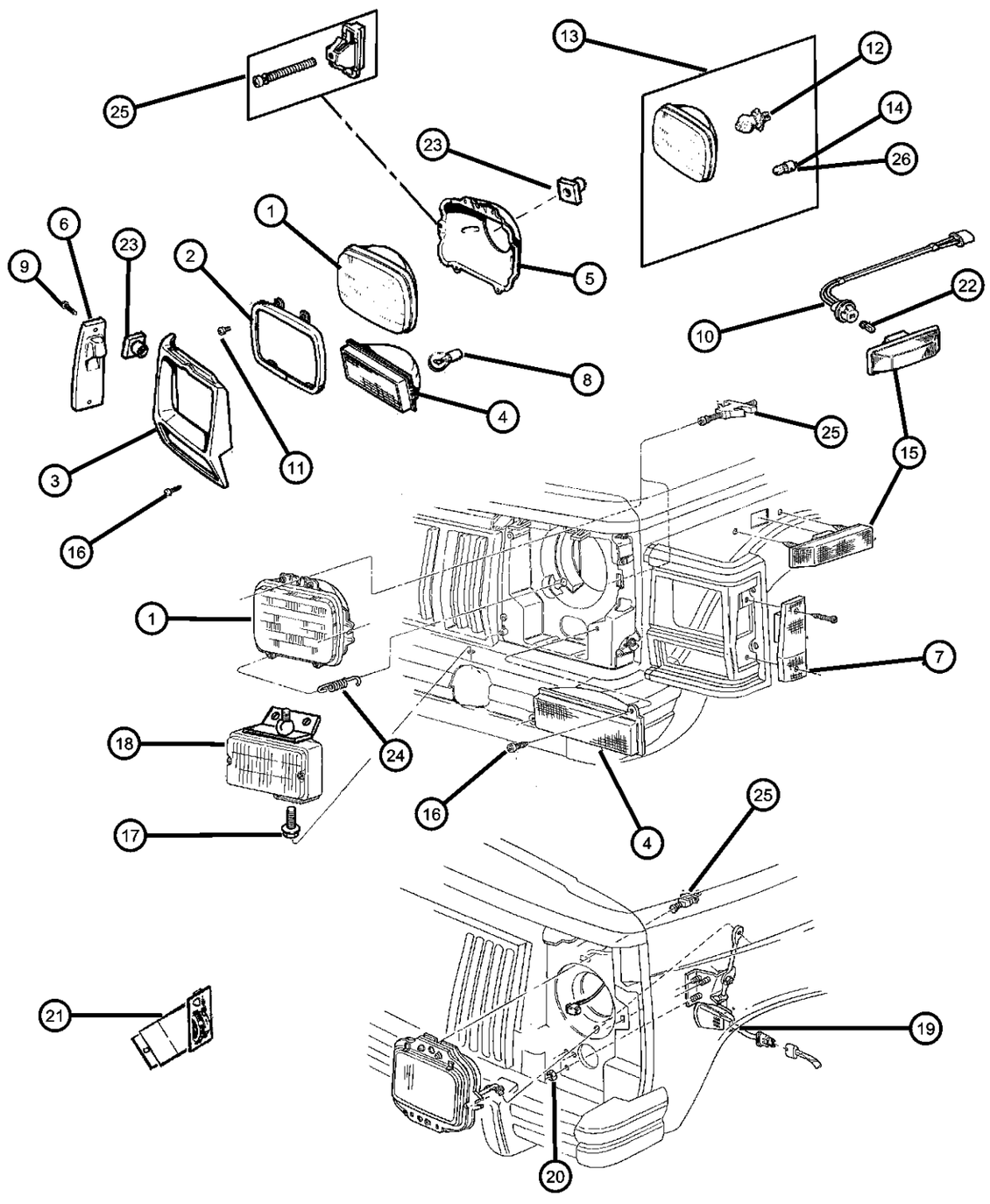

ITEM	PART NUMBER	QTY	LINE	SERIES	BODY	ENGINE	TRANS	TRIM	DESCRIPTION
	55055296AC	1	B, U						RHD/EUROPE, Right
	55055297AC	1	B, U						RHD/EUROPE, Left
	55055298AB	1	J, T						LHD/EUROPE w/H/Lamp Leveling, Right
	55055299AB	1	J, T						LHD/EUROPE w/H/Lamp Leveling, Left
	55055300AC	1							Type 2B1 (USA), Right
	55055301AC	1							Type 2B1 (USA), Left
	55055302AC	1	J, T						LHD/EUROPE (Clear), Right
	55055303AC	1	J, T						LHD/EUROPE (Clear), Left
	55155330AB	1	B, U						RHD/EUROPE w/H/Lamp Leveling, Right
	55155331AB	1	B, U						RHD/EUROPE w/H/Lamp Leveling, Left
14	J3242539	1	J						BULB, T8/4
15	55055014	2							LAMP, Side Repeater
16	06034204	4							SCREW, Pan Head, #6 HiLo
17	06503448	4							SCREW AND WASHER, Round Head, M8x1.25x20
18									LAMP AND BRACKET, Off Road Lamp
	55055274	1							Right
	55055275	1							Left
19									ACTUATOR, Headlamp
	55055240	1							Right
	55055241	1							Left
20	06100044	2							NUT AND WASHER, Hex, M5x0.80
21	56007675AB	1							SWITCH, Headlamp Leveling
22	09425542	2							BULB, 168
23	09425542	2							NUT, .164, (NOT SERVICED)
24	36002216	2							SPRING, Headlamp Adjusting
25	55054621	4							SCREW AND NUT, Headlamp Adjustment
26	04882328	1	B, U						BULB, 4 Watt - Bayonette Type

CHEROKEE (XJ)

SERIES	LINE	BODY	ENGINE	TRANSMISSION
L = LOWLINE	T = JEEP - 2WD B = JEEP - 2WD (RHD) J = JEEP - 4WD U = JEEP - 4WD (RHD)	72 = SPORT UTILITY 2-DR 74 = SPORT UTILITY 4-DR	ENC = 2.5L 4 Cyl Turbo Diesel Engine EPB = 2.5L 4 Cylinder Engine EPE = Engine - 2.5L Power Tech I-4 Cyl. ERH = 4.0L Power Tech I-6 Engine	DDQ = 5-Speed Manual Transmission DGS = 4-Speed Automatic AW4 Transmission DGO = ALL AUTOMATIC TRANSMISSIONS DBB = ALL MANUAL TRANSMISSIONS

Lamps Rear
Figure 8-1155

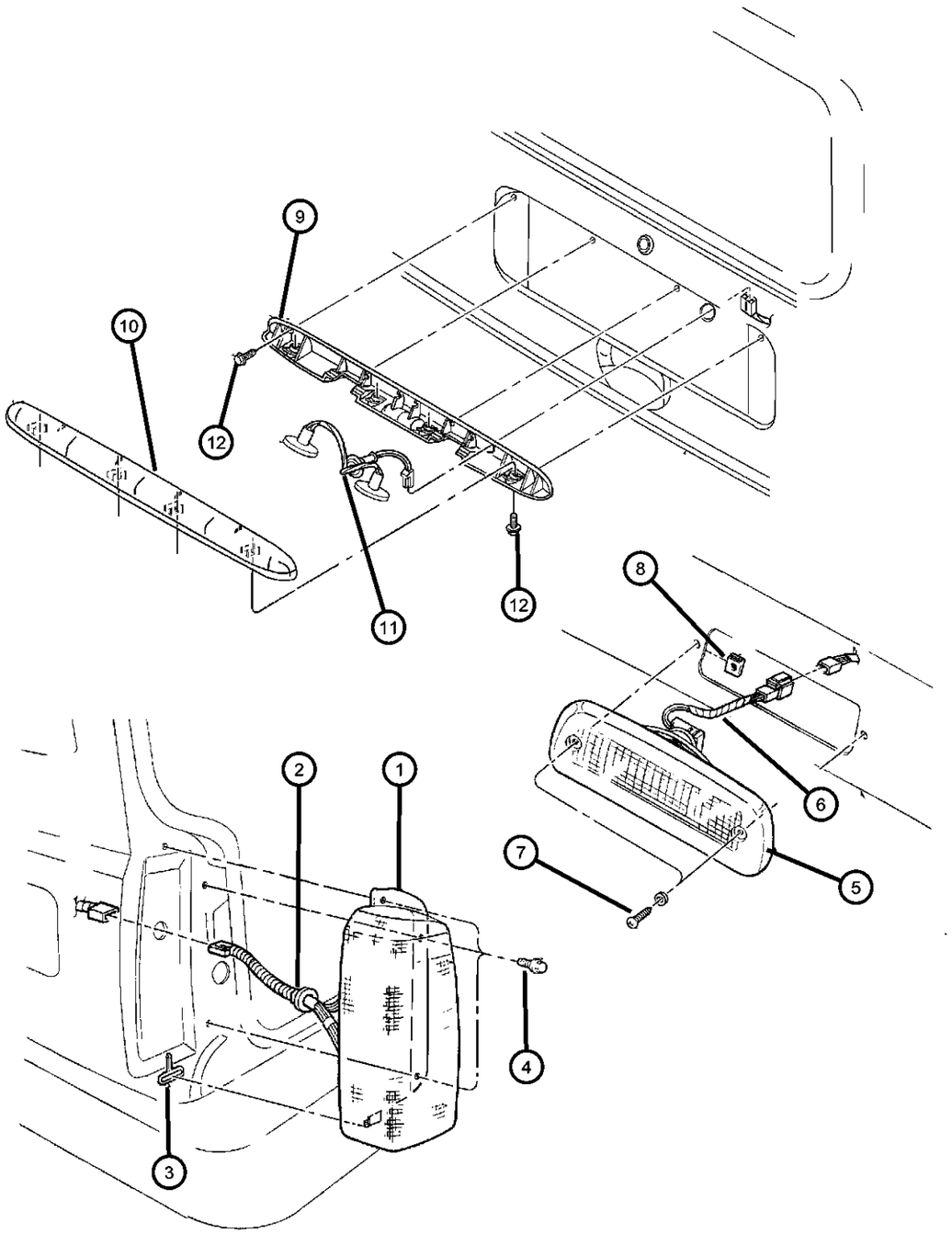

ITEM	PART NUMBER	QTY	LINE	SERIES	BODY	ENGINE	TRANS	TRIM	DESCRIPTION
1									LAMP, Tail Stop Turn
	04897398AA	1							Right
	04897399AA	1							Left
	04897400AA	1							EUROPE, Right
	04897401AA	1							EUROPE, Left
2									WIRING, Taillamp
	56009642	1							EUROPE
	56009770	1							
3	04676350	2							GROMMET, Lamp
4	06504016	6							SCREW AND WASHER, M6x20
5									LAMP, High Mounted Stop
	55155614AB	1							
	55155666AB	1							EUROPE
6	56008722	1							WIRING, High Mounted Stop Lamp
7	56008722	1							SCREW, .164-18x1.00, (NOT SERVICED)
8	00445346	2							NUT, J
9									LAMP, License Plate
	55155612AB	1							
	55155613AB	1							EUROPE
10	5FL86DX9	1							COVER, Lamp
11									WIRING, License Lamp
	56009643	1							
	56009650	1							EUROPE
12	06033718	4							SCREW, Tapping, .19-16x.625
-13	L0000168	2							BULB, 168
-14	00153625	2							BULB, W10/5
-15	L0003157	3							BULB, 3157Rear

CHEROKEE (XJ)

SERIES	LINE	BODY	ENGINE	TRANSMISSION
L = LOWLINE	T = JEEP - 2WD B = JEEP - 2WD (RHD) J = JEEP - 4WD U = JEEP - 4WD (RHD)	72 = SPORT UTILITY 2-DR 74 = SPORT UTILITY 4-DR	ENC = 2.5L 4 Cyl Turbo Diesel Engine EPB = 2.5L 4 Cylinder Engine EPE = Engine - 2.5L Power Tech I-4 Cyl. ERH = 4.0L Power Tech I-6 Engine	DDQ = 5-Speed Manual Transmission DGS = 4-Speed Automatic AW4 Transmission DGO = ALL AUTOMATIC TRANSMISSIONS DBB = ALL MANUAL TRANSMISSIONS

Lamps Cargo - Dome - Underhood
Figure 8-1165

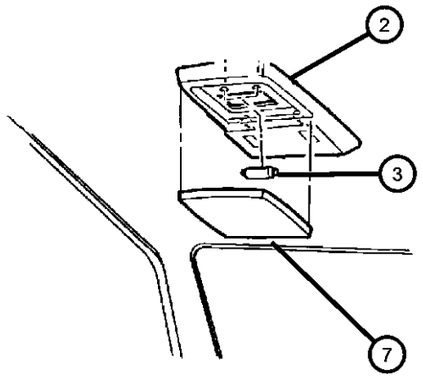

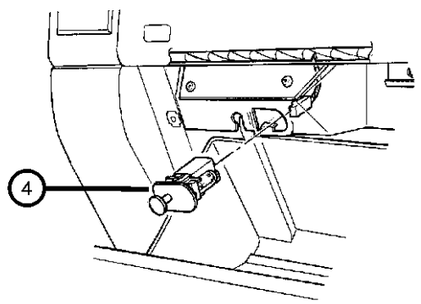

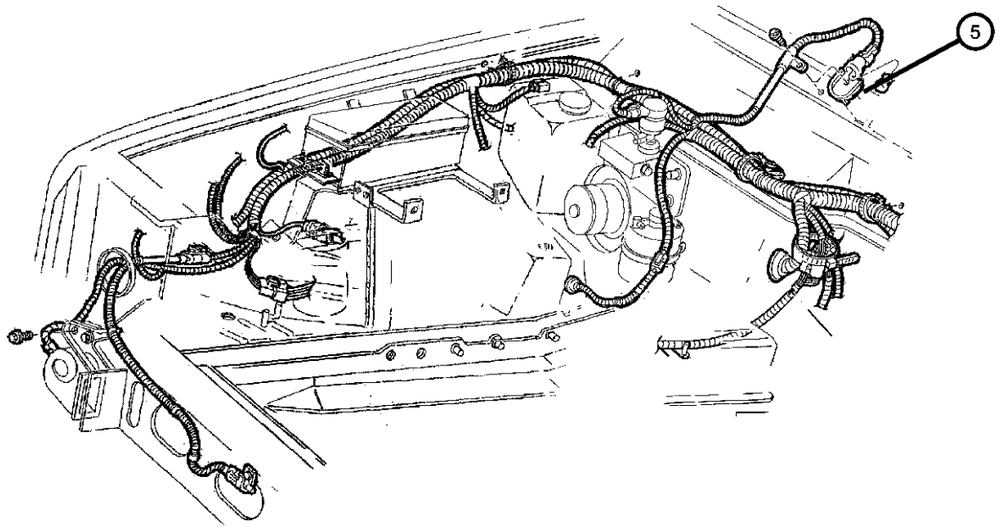

ITEM	PART NUMBER	QTY	LINE	SERIES	BODY	ENGINE	TRANS	TRIM	DESCRIPTION
-1	5BA67TC3	1							LAMP, Dome And Reading, Dome/Reading (Gray) Paint as Required
2									LAMP, Cargo
	5BA70TC3	1							Gray
	5BA70TT6	1							Spice
3	L0000561	1			74				BULB, 561
4	04565022	1							SWITCH AND LAMP, Glove Box
5	04741498	1							LAMP, Underhood
-6	5BA68TC3	1							LAMP, Dome, Dome (Gray) Paint as Required
7	05268175	1							LENS, Reading Lamp
-8	56000191	1							LENS, Dome Lamp

CHEROKEE (XJ)

SERIES	LINE	BODY	ENGINE	TRANSMISSION
L = LOWLINE	T = JEEP - 2WD B = JEEP - 2WD (RHD) J = JEEP - 4WD U = JEEP - 4WD (RHD)	72 = SPORT UTILITY 2-DR 74 = SPORT UTILITY 4-DR	ENC = 2.5L 4 Cyl Turbo Diesel Engine EPB = 2.5L 4 Cylinder Engine EPE = Engine - 2.5L Power Tech I-4 Cyl. ERH = 4.0L Power Tech I-6 Engine	DDQ = 5-Speed Manual Transmission DGS = 4-Speed Automatic AW4 Transmission DGO = ALL AUTOMATIC TRANSMISSIONS DBB = ALL MANUAL TRANSMISSIONS

Bulbs
Figure 8-1170

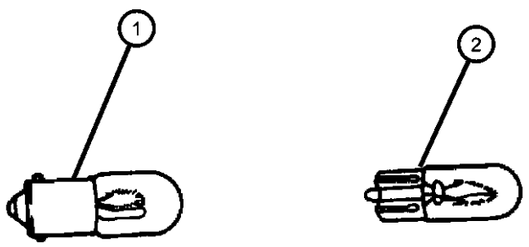

ITEM	PART NUMBER	QTY	LINE	SERIES	BODY	ENGINE	TRANS	TRIM	DESCRIPTION
[DG0]=Automatic Transmission									
1	L0003157	4							BULB, 3157
2	L0000168	2							BULB, 168
-3	L0000561	1			74				BULB, 561
-4	09437448	2					DG0		BULB, 658
-5	L0000074	1							BULB, 74, Sun Visor

CHEROKEE (XJ)

SERIES	LINE	BODY	ENGINE	TRANSMISSION
L = LOWLINE	T = JEEP - 2WD B = JEEP - 2WD (RHD) J = JEEP - 4WD U = JEEP - 4WD (RHD)	72 = SPORT UTILITY 2-DR 74 = SPORT UTILITY 4-DR	ENC = 2.5L 4 Cyl Turbo Diesel Engine EPB = 2.5L 4 Cylinder Engine EPE = Engine - 2.5L Power Tech I-4 Cyl. ERH = 4.0L Power Tech I-6 Engine	DDQ = 5-Speed Manual Transmission DGS = 4-Speed Automatic AW4 Transmission DGO = ALL AUTOMATIC TRANSMISSIONS DBB = ALL MANUAL TRANSMISSIONS

Wiring Engine & Related Parts
Figure 8-1210

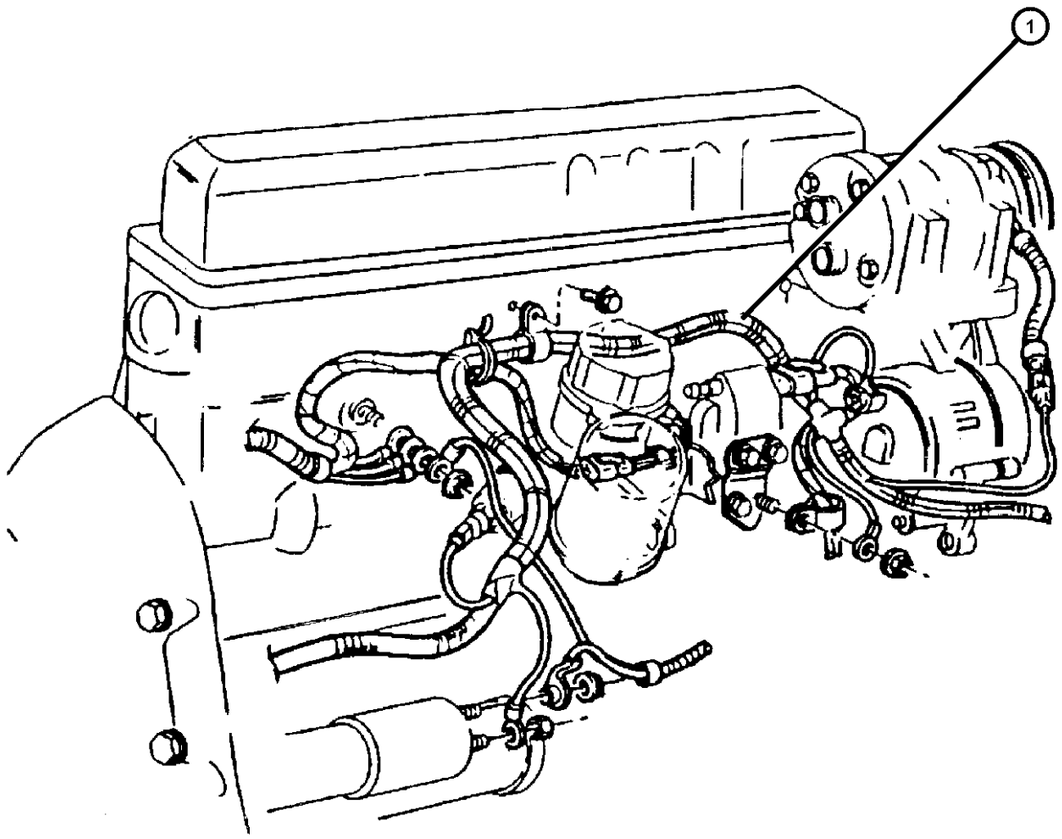

ITEM	PART NUMBER	QTY	LINE	SERIES	BODY	ENGINE	TRANS	TRIM	DESCRIPTION
[EP0]=2.5L Engine [ER0]=4.0L Engine [EN0]=4 Cylinder Turbo Diesel Engine [DG0]=Automatic Transmission [DBB]= Manual Transmission									
1									WIRING, Engine
	56008833	1	J, U			ER0	DG0		4.0L with 231 Transfer Case (Automatic)
	56008837	1	J, U			EP0	DBB		2.5L with 231 Transfer Case (Manual)
	56009383	1	B, T			EP0	DBB		2.5L with 2 WD (Manual)
	56009384	1	B, T			ER0	DG0		4.0L with 2WD (Automatic)
	56009385	1	J, U			ER0	DG0		4.0L with Automatic (242 Transfer Case)
	56009386	1	B, T			ER0	DBB		4.0L with 2WD (Manual)
	56009710	1	J, U			ER0	DBB		4.0L with 242 Transfer Case (Manual)
	56010025AB	1				EN0	DBB		Diesel (Manual)
	56010061	1	J, U			ER0	DBB		4.0L with 231 Transfer Case (Manual)
-2	56009275	1				EN0			WIRING, Alternator
-3	06101484	1							FUSE, Mini, 5 Amp, Tan
-4	06101487	1							FUSE, Mini, 15 AMP, Light Blue
-5	06101486	1							FUSE, Mini, 10 AMP, Red
-6	06101488	1							FUSE, Mini, 20 AMP, Yellow
-7	06101640	4	J		72	ER0	DG0		FUSE, Maxi, 30 Amp, Green
-8									COVER, Power Distribution Center
	56038361	AR							Diesel Engine, Export
	56038363	AR							Upper
	56038364	1							Lower

CHEROKEE (XJ)

SERIES	LINE	BODY	ENGINE	TRANSMISSION
L = LOWLINE	T = JEEP - 2WD B = JEEP - 2WD (RHD) J = JEEP - 4WD U = JEEP - 4WD (RHD)	72 = SPORT UTILITY 2-DR 74 = SPORT UTILITY 4-DR	ENC = 2.5L 4 Cyl Turbo Diesel Engine EPB = 2.5L 4 Cylinder Engine EPE = Engine - 2.5L Power Tech I-4 Cyl. ERH = 4.0L Power Tech I-6 Engine	DDQ = 5-Speed Manual Transmission DGS = 4-Speed Automatic AW4 Transmission DGO = ALL AUTOMATIC TRANSMISSIONS DBB = ALL MANUAL TRANSMISSIONS

AR = use ase required - = Non illustrrated part

Wiring Headlamp / Dash
Figure 8-1310

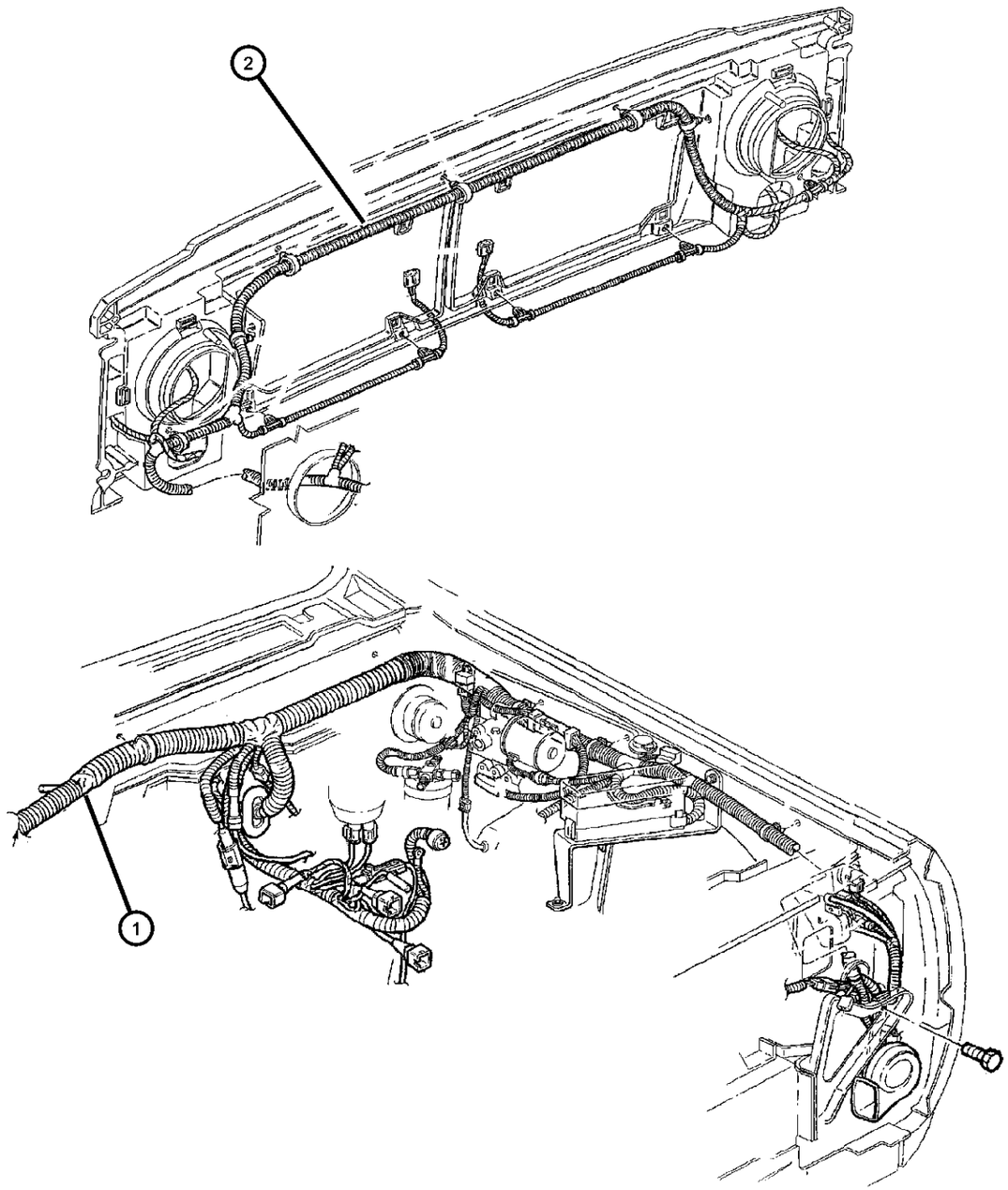

ITEM	PART NUMBER	QTY	LINE	SERIES	BODY	ENGINE	TRANS	TRIM	DESCRIPTION
[EP0]=2.5L Engine [ER0]=4.0L Engine [EN0]=4 Cylinder Turbo Diesel Engine [DG0]=Automatic Transmission [DBB]= Manual Transmission									
1									WIRING, Headlamp to Dash
	56009843AB	1	J, T			EP0			2.5L Engine with Halogen Headlamp-Daytime Running Lights (LHD) CANADA
	56009846AB	1	J, T			EP0			2.5L Engine without Halogen Headlamp-Daytime Running Lights (LHD)
	56009848	1	J, T			ER0	DG0		4.0L with Automatic Transmission & Four Wheel Anti-Lock Brakes, without Halogen Headlamp-Daytime Running Lights (LHD)
	56009849	1	J, T			ER0	DG0		4.0L Engine with Automatic Transmission, Power Brakes, Front Disc/Rear Drum & Halogen H/Lamp-Daytime Running Lamp (LHD) CANADA
	56009850	1	J, T			ER0	DG0		4.0L Engine with Automatic Transmission, Four Wheel Anti-Lock Brakes & Halogen Headlamp-Daytime Running Lights (LHD) CANADA
	56009851	1	J, T			ER0	DG0		4.0L Engine with Automatic Transmission, Power Brakes, Front Disc/Rear Drum, without Halogen Headlamp-Daytime Running Lights (LHD)
	56009852	1	J, T			ER0	DBB		4.0L Engine with Manual Transmission, Power Brakes, Front Disc/Rear Drum & without Halogen Headlamp-daytime Running Lights (LHD)
	56009853	1	J, T			ER0	DBB		4.0L Engine with Manual Transmission, Power Brakes, Front Disc/Rear Drum & Halogen Headlamp-Daytime Running Lights (LHD) CANADA
	56009854	1	J, T			ER0	DBB		4.0L Engine with Manual Transmission, Four Wheel Anti-Lock Brakes & Halogen Headlamp-Daytime Running Lights (LHD) CANADA

CHEROKEE (XJ)

SERIES	LINE	BODY	ENGINE	TRANSMISSION
L = LOWLINE	T = JEEP - 2WD B = JEEP - 2WD (RHD) J = JEEP - 4WD U = JEEP - 4WD (RHD)	72 = SPORT UTILITY 2-DR 74 = SPORT UTILITY 4-DR	ENC = 2.5L 4 Cyl Turbo Diesel Engine EPB = 2.5L 4 Cylinder Engine EPE = Engine - 2.5L Power Tech I-4 Cyl. ERH = 4.0L Power Tech I-6 Engine	DDQ = 5-Speed Manual Transmission DGS = 4-Speed Automatic AW4 Transmission DGO = ALL AUTOMATIC TRANSMISSIONS DBB = ALL MANUAL TRANSMISSIONS

Wiring Headlamp / Dash
Figure 8-1310

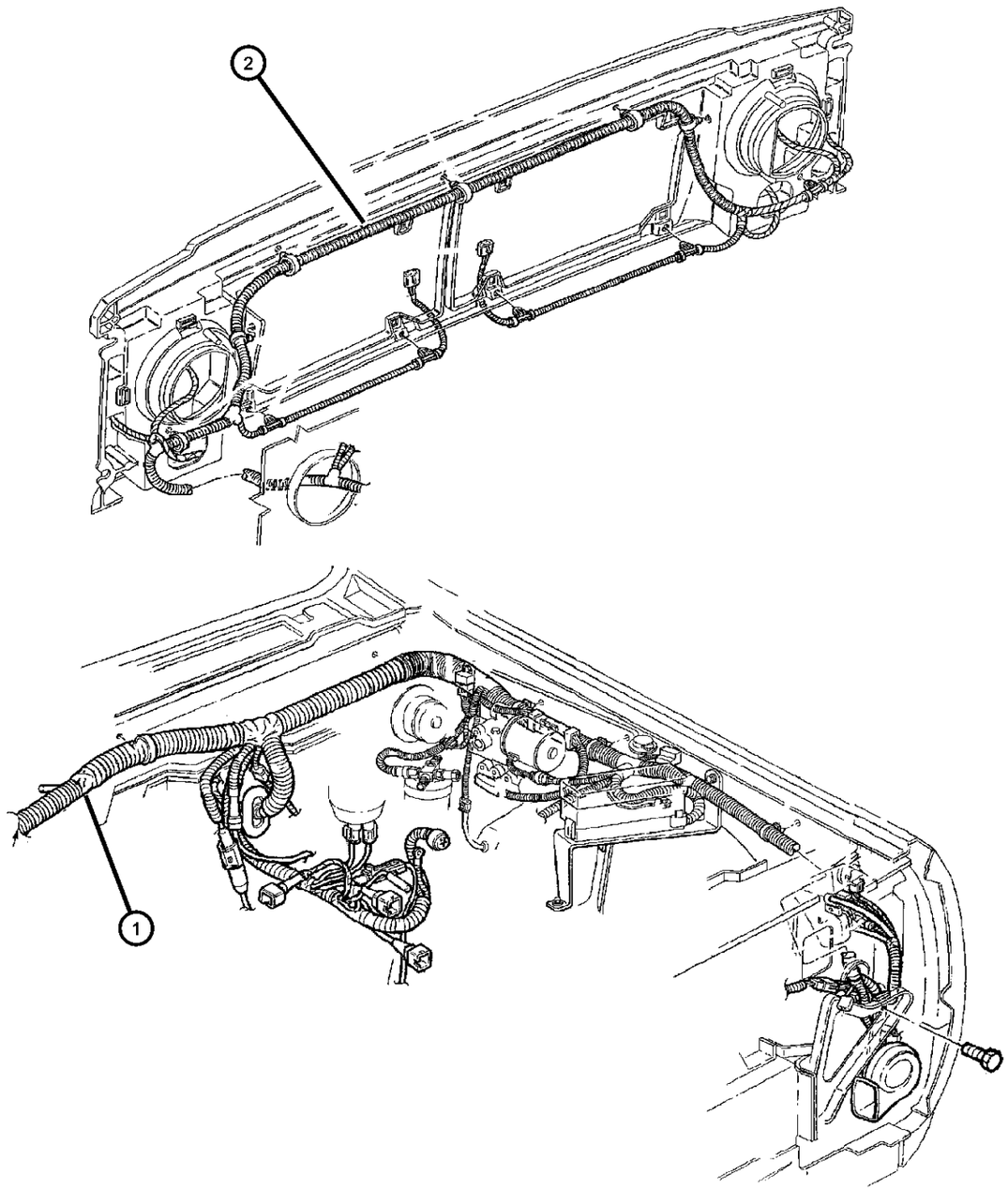

ITEM	PART NUMBER	QTY	LINE	SERIES	BODY	ENGINE	TRANS	TRIM	DESCRIPTION
	56009855	1	J, T			ER0	DBB		4.0L Engine with Manual Transmission, Power Brakes, Front Disc/Rear Drurm & without Halogen Headlamp-Daytime Running Lights (LHD),
	56009856AB	1	B, U			EP0	DBB		2.5L Engine with Manual Transmission(RHD)
	56009857	1	B, U			ER0	DG0		4.0L Engine with Automatic Transmission & Power Brakes, Front Disc/Rear Drum(RHD)
	56009858	1	B, U			ER0	DG0		4.0L Engine with Automatic Transmission & Four Wheel Anti-Lock Brakes (RHD)
	56009859	1	J, T			ER0	DG0		4.0L Engine with Automatic Transmission with Power Brakes, Front Disc/Rear Drum & with Halogen Headlamp-Daytime Running Lights (LHD)
	56009872AB	1	B, U			EN0			Diesel with Power Brakes, Front Disc/Rear Drum(RHD)
	56009873AB	1	J			EN0			Diesel with Four Wheel Anti-Lock Brakes (LHD)
	56009874AB	1	B, U			EN0			Diesel with Four Wheel Anti-Lock Brakes (RHD)
	56009875AB	1	J, T			EN0			Diesel with Power Brakes, Front Disc/Rear Drum (LHD)
2									WIRING, Front End Lighting
	56007628AB	1							with Headlamp Leveling Device & Export Equipment Package
	56007684	1							without Headlamp Leveling Device & without Export Equipment Package
	56007686AB	1							with Export Equipment Package & without Headlamp Leveling Device
	56007687	1							with Headlamp Leveling Device & without Export Equipment Package
-3	56007685	2							WIRING, Turn Signal Lamp, Export
-4	56007685	2							BRACKET, Power Distribution Center, (NOT REQUIRED)
-5	56038363	AR							COVER, Power Distribution Center

CHEROKEE (XJ)

SERIES	LINE	BODY	ENGINE	TRANSMISSION
L = LOWLINE	T = JEEP - 2WD B = JEEP - 2WD (RHD) J = JEEP - 4WD U = JEEP - 4WD (RHD)	72 = SPORT UTILITY 2-DR 74 = SPORT UTILITY 4-DR	ENC = 2.5L 4 Cyl Turbo Diesel Engine EPB = 2.5L 4 Cylinder Engine EPE = Engine - 2.5L Power Tech I-4 Cyl. ERH = 4.0L Power Tech I-6 Engine	DDQ = 5-Speed Manual Transmission DGS = 4-Speed Automatic AW4 Transmission DGO = ALL AUTOMATIC TRANSMISSIONS DBB = ALL MANUAL TRANSMISSIONS

AR = use ase required - = Non illustrrated part

Wiring Instrument Panel
Figure 8-1410

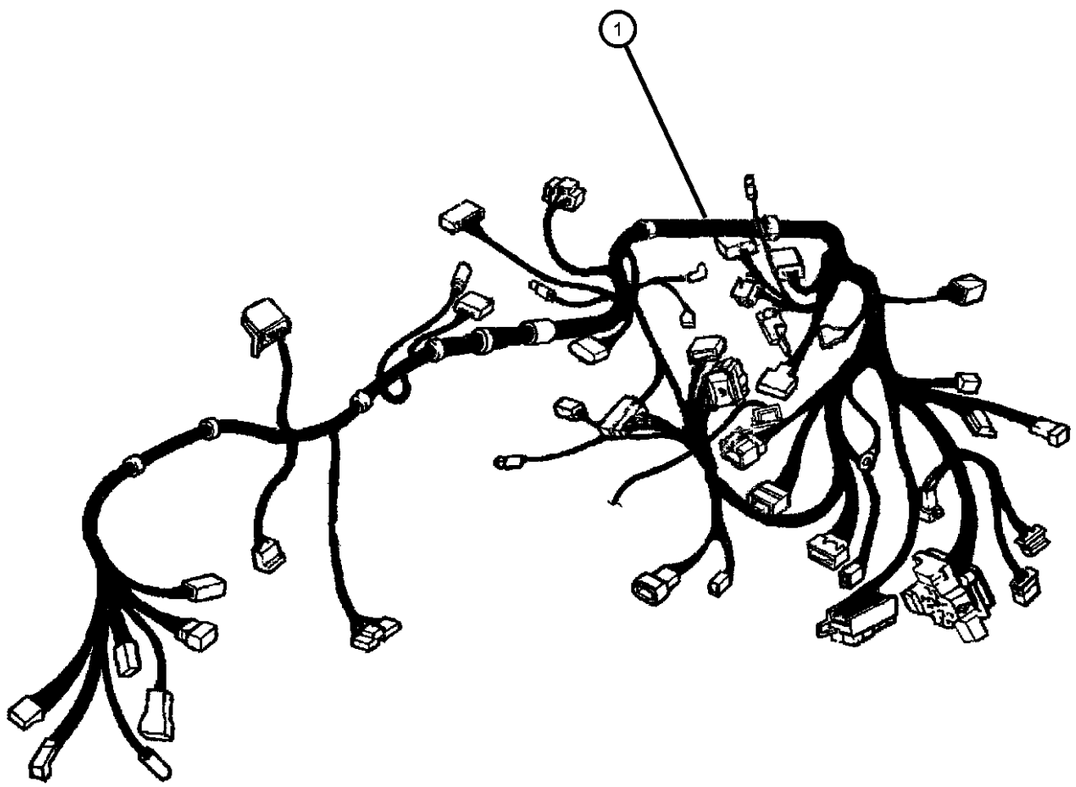

ITEM	PART NUMBER	QTY	LINE	SERIES	BODY	ENGINE	TRANS	TRIM	DESCRIPTION
1									WIRING, Instrument Panel
	56009909AB	1	J, T						w/o Power Locks, Light Pkg., Dual Road Lamp-Fog, Police Pkg. or Power Mirrors, Left Hand Drive
	56009910AB	1	J, T						w/Power Locks, Light Pkg.., Dual Road Lamp-Fog & Power Mirror, w/o Police Pkg., Left Hand Drive
	56009911AC	1	J, T						w/Diesel Engine, Left Hand Drive
	56009912AC	1	B, U						w/o Postal Pkg., Right Hand Drive
	56009913AB	1	J, T						w/Police Pkg., Left Hand Drive
	56009914AB	1	B, U						w/Postal Pkg., Right Hand Drive
	56009916AB	1	J, T						I/Panel Lower w/Power Locks & Mirror
	56009917AB	1	J, T						I/Panel Lower w/o Power Locks or Mirrior
-2	56017442	1							WIRING, Courtesy Lamp
-3	56009715	1							COVER, Fuse Access
-4	56007573	1							JUNCTION BLOCK, Multifunction Module
-5	04432543	1							WEDGE, Wiring

CHEROKEE (XJ)

SERIES	LINE	BODY	ENGINE	TRANSMISSION
L = LOWLINE	T = JEEP - 2WD B = JEEP - 2WD (RHD) J = JEEP - 4WD U = JEEP - 4WD (RHD)	72 = SPORT UTILITY 2-DR 74 = SPORT UTILITY 4-DR	ENC = 2.5L 4 Cyl Turbo Diesel Engine EPB = 2.5L 4 Cylinder Engine EPE = Engine - 2.5L Power Tech I-4 Cyl. ERH = 4.0L Power Tech I-6 Engine	DDQ = 5-Speed Manual Transmission DGS = 4-Speed Automatic AW4 Transmission DGO = ALL AUTOMATIC TRANSMISSIONS DBB = ALL MANUAL TRANSMISSIONS

Wiring Body & Accessory
Figure 8-1510

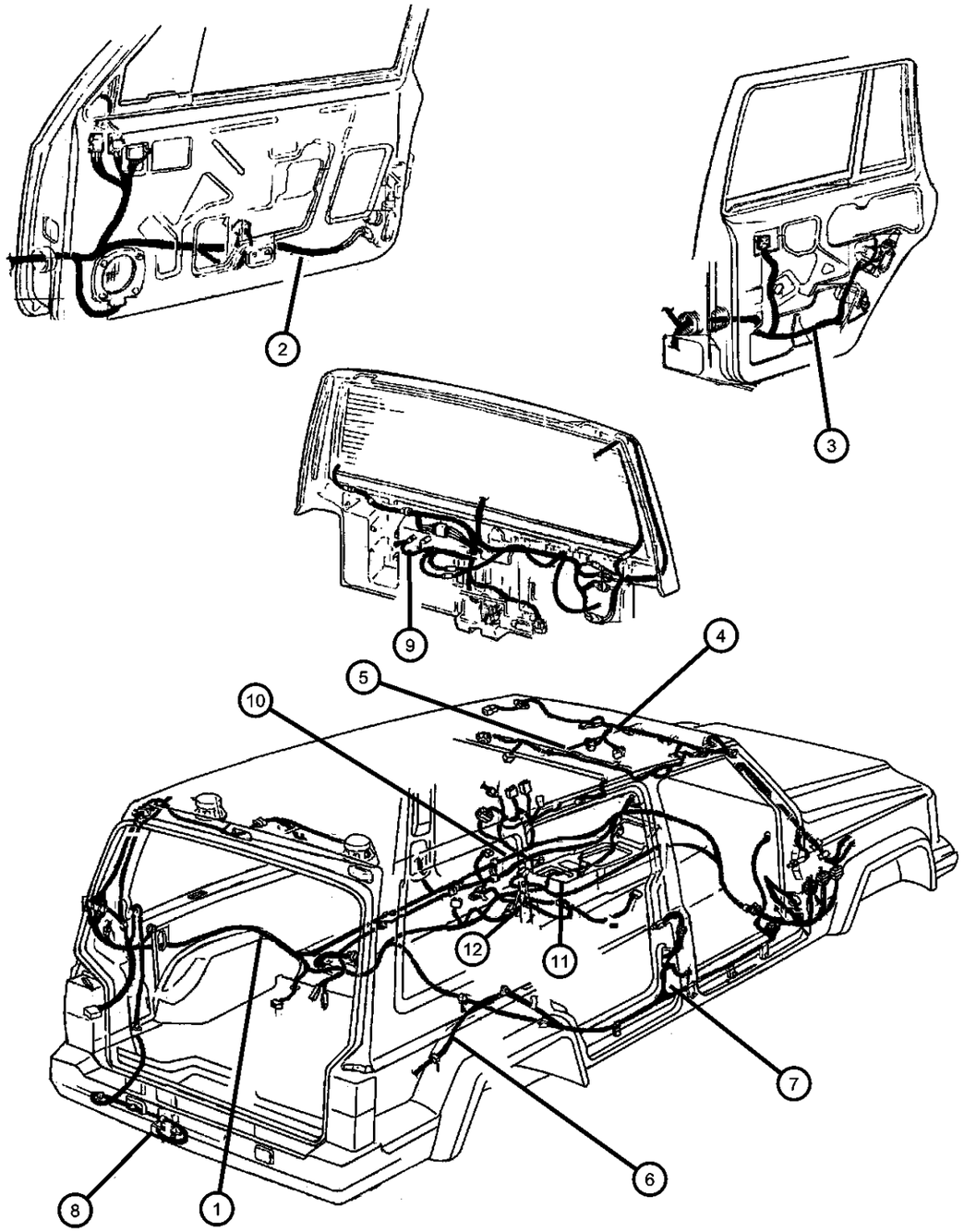

ITEM	PART NUMBER	QTY	LINE	SERIES	BODY	ENGINE	TRANS	TRIM	DESCRIPTION
1									WIRING, Body
	56009282AC	1	J, T						w/Power Locks, w/o 6-Speakers, Left Hand Drive
	56009283AC	1	J, T						w/o Power Locks & w/o 6-Speakers, Left Hand Drive
	56009721AC	1	B, U						w/o Power Locks & w/o 6-Speakers, Right Hand Drive
	56009722AC	1	B, U						w/Power Locks, w/o 6-Speakers, Right Hand Drive
	56009723AC	1	B, U						w/Power Locks & 6-Speakers, Right Hand Drive
	56009724AC	1	B, U						w/o Power Locks, w/6-Speakers, Right Hand Drive
	56009890AC	1	J, T						w/Power Locks & 6-Speakers, Left Hand Drive
	56009891AC	1	J, T						w/o Power Locks, w/6-Speakers, Left Hand Drive
2									WIRING, Door
	56009264	1	B						Right Front w/Mirror w/o Pwr Locks
	56009265	1	B						Right Front w/ Power Locks (RHD)
	56009403	1	J						Left Front w/ Powert Locks [LHD]
	56009404	1	J						Left Front w/Pwr Mirror w/o Pwr Locks
	56009406	1	J						Left Front w/Pwr. Mirror and 6 Spkr. w/o Pwr lock
	56009408	1	J						Right Front w/ Power Locks (LHD)
3	56009806AB	2			74				WIRING, Rear Door
4									WIRING, Overhead Console
	04882780	1							w/Overhead Console Type I
	56009702	1							w/Overhead Console Type II
5									WIRING, Dome Lamp
	56009439	1							Dome Lamp w/Sunvisor Illuminated Mirrors
	56009703	1							Dome Lamp w/Keyless Entry
	56009705	1	J, T						Dome Lamp w/Police Package
	56009757	1							Dome Lamp w/o Keyless Entry & w/o Sunvisor Illuminated Mirrors
6									WIRING, Body to Liftgate
	56009762	1			74				Model 74

CHEROKEE (XJ)

SERIES	LINE	BODY	ENGINE	TRANSMISSION
L = LOWLINE	T = JEEP - 2WD B = JEEP - 2WD (RHD) J = JEEP - 4WD U = JEEP - 4WD (RHD)	72 = SPORT UTILITY 2-DR 74 = SPORT UTILITY 4-DR	ENC = 2.5L 4 Cyl Turbo Diesel Engine EPB = 2.5L 4 Cylinder Engine EPE = Engine - 2.5L Power Tech I-4 Cyl. ERH = 4.0L Power Tech I-6 Engine	DDQ = 5-Speed Manual Transmission DGS = 4-Speed Automatic AW4 Transmission DGO = ALL AUTOMATIC TRANSMISSIONS DBB = ALL MANUAL TRANSMISSIONS

Wiring Body & Accessory
Figure 8-1510

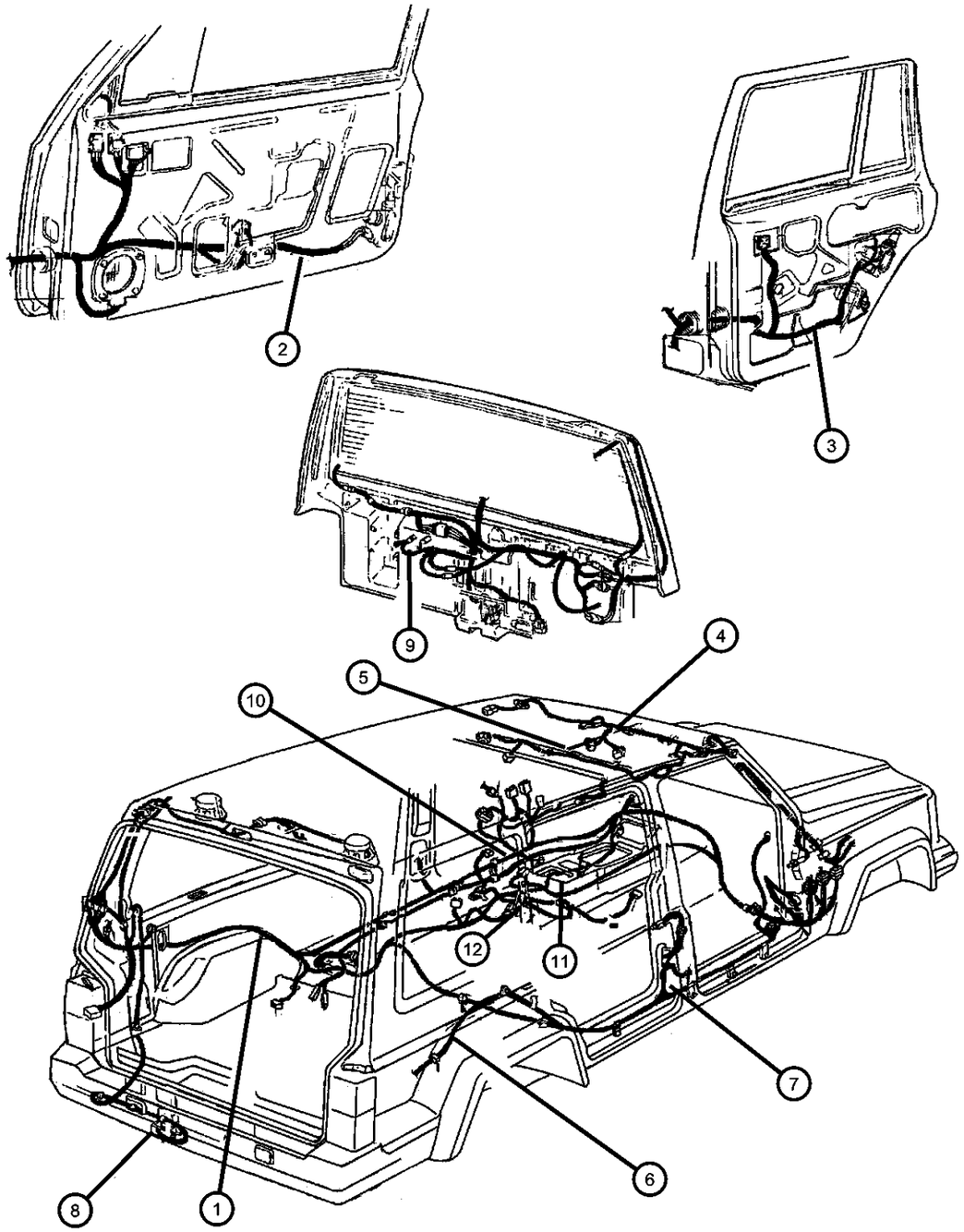

ITEM	PART NUMBER	QTY	LINE	SERIES	BODY	ENGINE	TRANS	TRIM	DESCRIPTION
	56009871	1			72				Model 72
7									WIRING, Door Jumper
	56007579AB	2							Jumper
	56009804	2			74				Courtesy Lamp Switch
8	56009268	1							WIRING, Trailer Tow
9									WIRING, Liftgate
	56009760	1							w/Power Locks
	56009761	1							w/o Power Locks
10									WIRING, Power Seat
	56008712	1	B, U		72				Model 72 w/Export Pkg., Right Hand Drive
		1	B, U		74				Model 74 w/Export Pkg., Right Hand Drive
		1	J, T		74				Model 74, Left Hand Drive
		1	J, T		72				Model 72, Left Hand Drive
		1	J, T		72				
	56008713	1	J, T		72				Model 72 w/Export Pkg., Left Hand Drive
		1	B, U		74				Model 74 w/Export, Right Hand Drive
	56009271	1							6-Way Type I
	56009272	1							6-Way Type II
11									WIRING, Console
	56009280	1	J, U			DG0			
	56009285	1	J, U			DBB			Manual Transmission
		1	B, T			DG0			Automatic Transmission
12									WIRING, Anti-lock Brake
	56009267	1	J, T						Left Hand Drive
	56009865	1	B, U						Right Hand Drive
-13	56007685	2							WIRING, Turn Signal Lamp

CHEROKEE (XJ)

SERIES	LINE	BODY	ENGINE	TRANSMISSION
L = LOWLINE	T = JEEP - 2WD B = JEEP - 2WD (RHD) J = JEEP - 4WD U = JEEP - 4WD (RHD)	72 = SPORT UTILITY 2-DR 74 = SPORT UTILITY 4-DR	ENC = 2.5L 4 Cyl Turbo Diesel Engine EPB = 2.5L 4 Cylinder Engine EPE = Engine - 2.5L Power Tech I-4 Cyl. ERH = 4.0L Power Tech I-6 Engine	DDQ = 5-Speed Manual Transmission DGS = 4-Speed Automatic AW4 Transmission DGO = ALL AUTOMATIC TRANSMISSIONS DBB = ALL MANUAL TRANSMISSIONS

ITEM	PART NUMBER	QTY	LINE	SERIES	BODY	ENGINE	TRANS	TRIM	DESCRIPTION
-1	05013930AA	1							WIRING PACKAGE, Underhood Connector Repair, For Electrical Connector Repair Information visit the World Wide Web at http://dto.vftis.com/mopar/dis-claimer.asp
-2	04863839	1							CONNECTOR PACKAGE, Beam Select Switch

For Electrical Connector Repair Information visit the World Wide Web at

http://dto.vftis.com/mopar/disclaimer.asp

CHEROKEE (XJ)

SERIES	LINE	BODY	ENGINE	TRANSMISSION
L = LOWLINE	T = JEEP - 2WD B = JEEP - 2WD (RHD) J = JEEP - 4WD U = JEEP - 4WD (RHD)	72 = SPORT UTILITY 2-DR 74 = SPORT UTILITY 4-DR	ENC = 2.5L 4 Cyl Turbo Diesel Engine EPB = 2.5L 4 Cylinder Engine EPE = Engine - 2.5L Power Tech I-4 Cyl. ERH = 4.0L Power Tech I-6 Engine	DDQ = 5-Speed Manual Transmission DGS = 4-Speed Automatic AW4 Transmission DGO = ALL AUTOMATIC TRANSMISSIONS DBB = ALL MANUAL TRANSMISSIONS

Power Distribution Center Repair
Figure 8-1610

ITEM	PART NUMBER	QTY	LINE	SERIES	BODY	ENGINE	TRANS	TRIM	DESCRIPTION
1	05014460AA	1							REPAIR KIT, Power Distribution Center

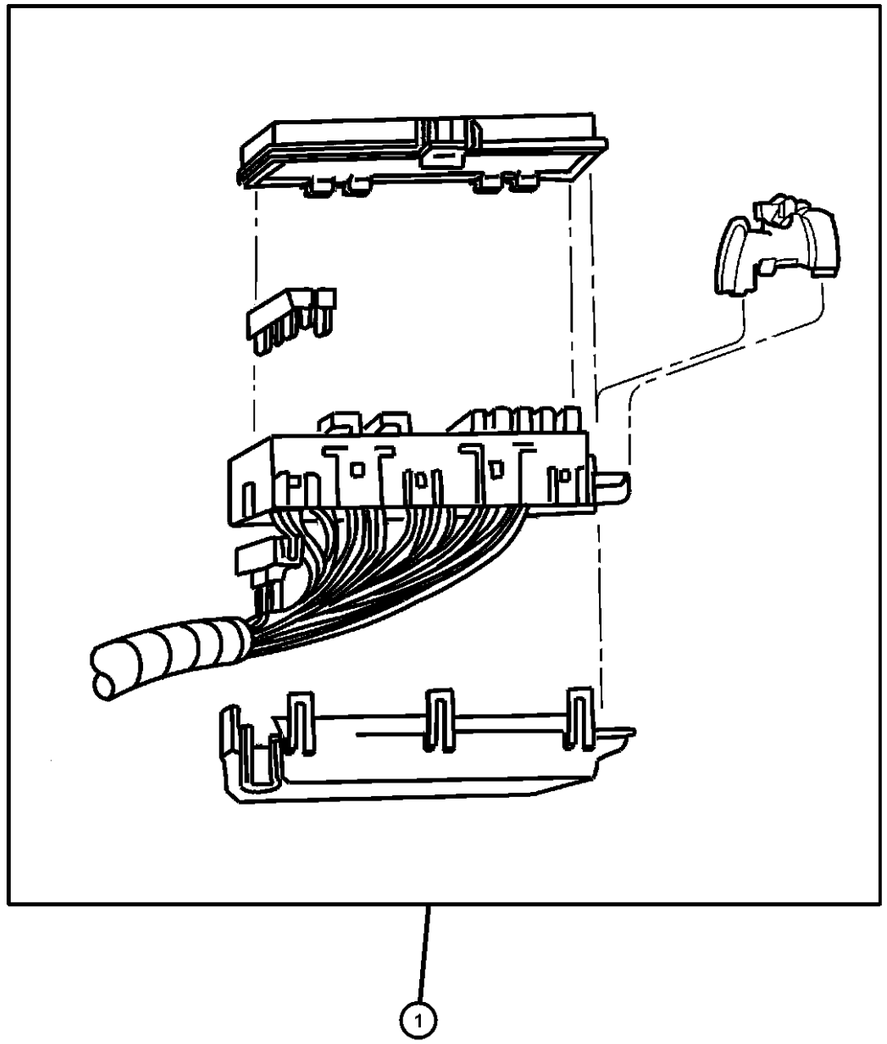

CHEROKEE (XJ)

SERIES	LINE	BODY	ENGINE	TRANSMISSION
L = LOWLINE	T = JEEP - 2WD B = JEEP - 2WD (RHD) J = JEEP - 4WD U = JEEP - 4WD (RHD)	72 = SPORT UTILITY 2-DR 74 = SPORT UTILITY 4-DR	ENC = 2.5L 4 Cyl Turbo Diesel Engine EPB = 2.5L 4 Cylinder Engine EPE = Engine - 2.5L Power Tech I-4 Cyl. ERH = 4.0L Power Tech I-6 Engine	DDQ = 5-Speed Manual Transmission DGS = 4-Speed Automatic AW4 Transmission DGO = ALL AUTOMATIC TRANSMISSIONS DBB = ALL MANUAL TRANSMISSIONS

Spark Plug-Cables & Coils
Figure 8-1905

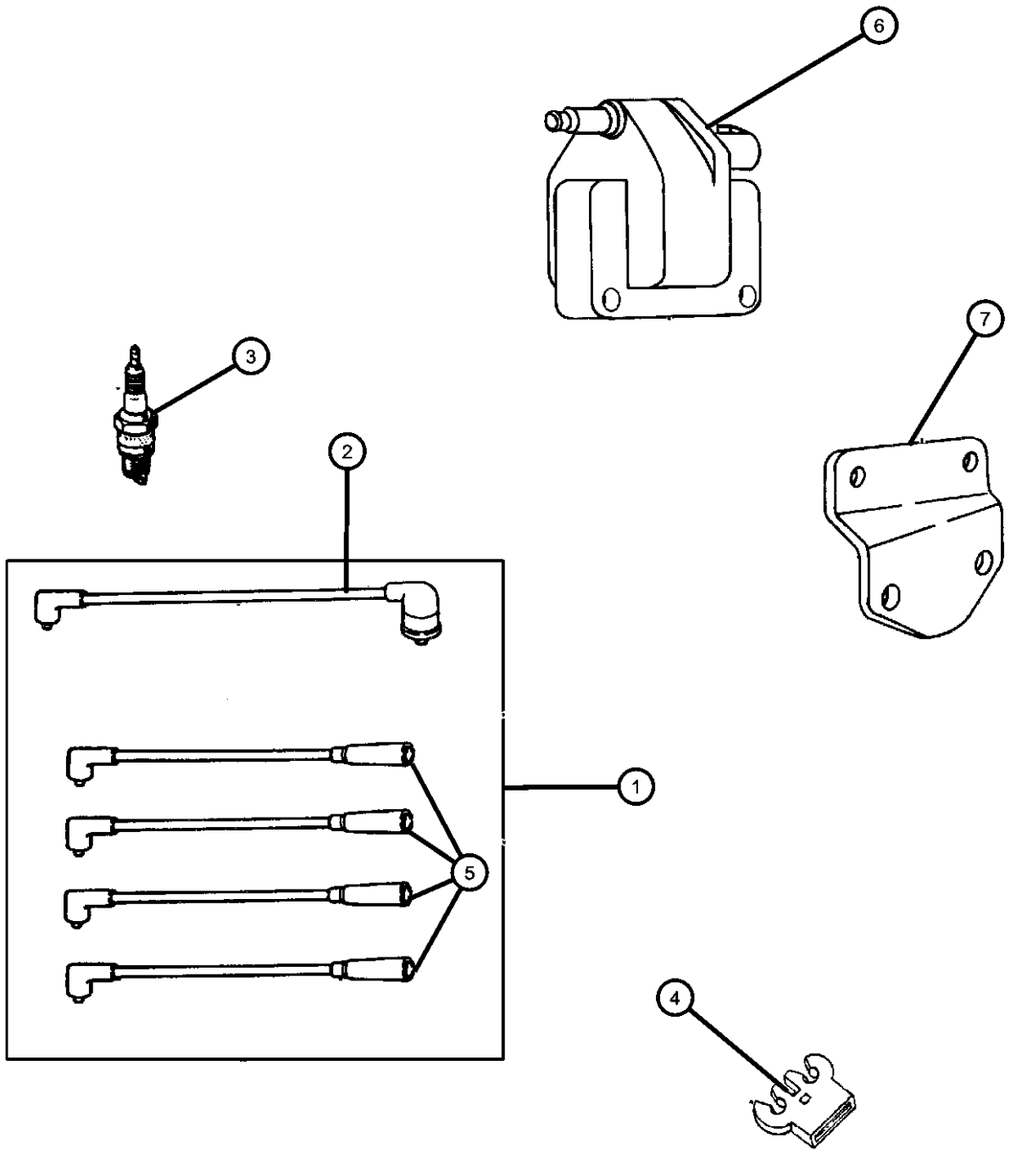

ITEM	PART NUMBER	QTY	LINE	SERIES	BODY	ENGINE	TRANS	TRIM	DESCRIPTION
EP0=2.5L Engine									
ER0=4.0L Engine									
EN0=4 Cylinder Turbo Diesel Engine									
1									CABLE PACKAGE, Ignition
	83507178	1				ER0			4.0L Engine
	83507180	1				EP0			2.5L Engine
2									CABLE, Ignition Coil
	56027270	1				EP0			2.5L Engine
	56041057	1				ER0			4.0L Engine
3									SPARK PLUG, RC-12-LYC5
	56027275	4				EP0			2.5L Engine
		6				ER0			4.0L Engine
4									SEPERATOR, Ignition Cable
	33007154	1				ER0			4.0L Engine
	53006579	1				EP0			2.5L Engine
5									CABLE, Ignition
	33007152	1				EP0			1 (2.5L Engine)
	33007153	1				EP0			3 (2.5L Engine)
	33007157	1				ER0			2 (4.0L Engine)
		1				EP0			2 (2.5L Engine)
	33007158	1				ER0			3 &4 (4.0L Engine)
		AR				EP0			4 (2.5L Engine)
	53008069	1				ER0			5 (4.0L Engine)
	53008070	1				ER0			1 (4.0L Engine)
	53008628	1				ER0			6 (4.0L Engine)
6									COIL, Ignition
	04797293	1				EP0			2.5L Engine
		1				ER0			4.0L Engine
7									BRACKET, Ignition Coil
	53008702	1				EP0			2.5L Engine
	56026890	1				ER0			4.0L Engine

CHEROKEE (XJ)

SERIES	LINE	BODY	ENGINE	TRANSMISSION
L = LOWLINE	T = JEEP - 2WD B = JEEP - 2WD (RHD) J = JEEP - 4WD U = JEEP - 4WD (RHD)	72 = SPORT UTILITY 2-DR 74 = SPORT UTILITY 4-DR	ENC = 2.5L 4 Cyl Turbo Diesel Engine EPB = 2.5L 4 Cylinder Engine EPE = Engine - 2.5L Power Tech I-4 Cyl. ERH = 4.0L Power Tech I-6 Engine	DDQ = 5-Speed Manual Transmission DGS = 4-Speed Automatic AW4 Transmission DGO = ALL AUTOMATIC TRANSMISSIONS DBB = ALL MANUAL TRANSMISSIONS

Group - 08A

Instrument Panel and Radios and Consoles

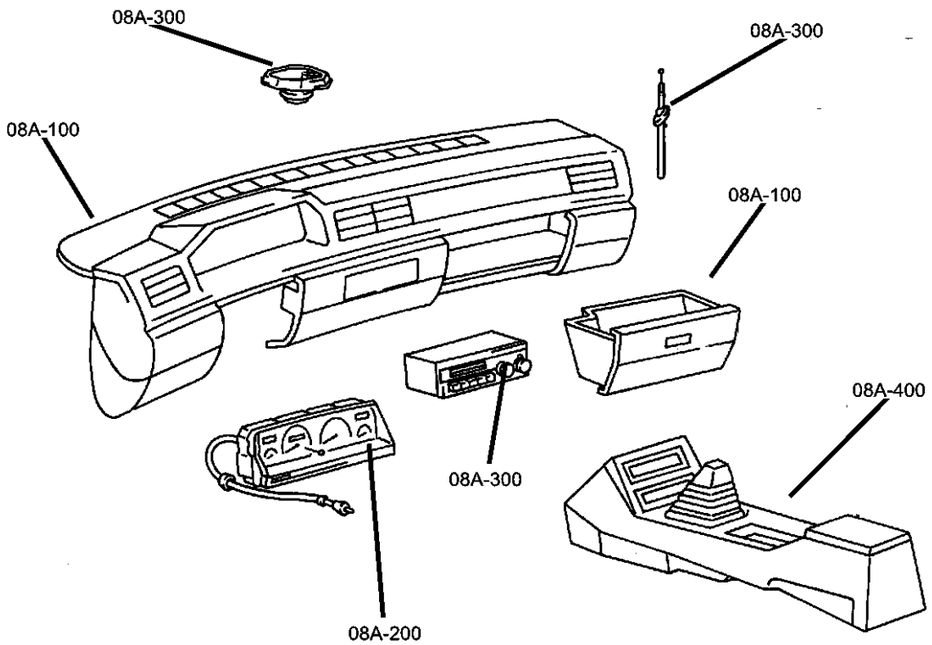

08A-100 Instrument Panel	08A-200 Instrument Panel Cluster	08A-300 Radio, Antenna, and Speakers	08A-400 Consoles
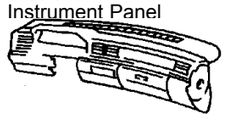	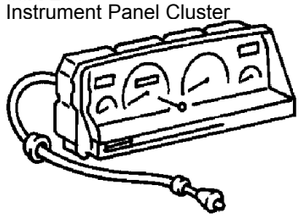	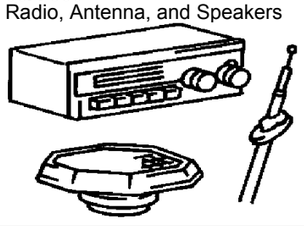	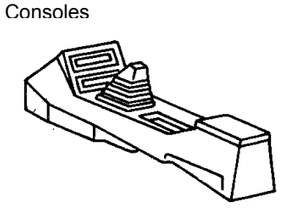

Group - 08A Instrument Panel and Radios and Consoles

Illustration Title — Group-Fig. No.

Instrument Panel
Pad & Bezel (LHD) ..... Fig. 08A - 120
Pad & Bezels (RHD) ..... Fig. 08A - 122

Instrument Panel Cluster
Cluster ..... Fig. 08A - 220

Radio, Antenna, and Speakers
Radio ..... Fig. 08A - 310
Speakers ..... Fig. 08A - 320
Antenna ..... Fig. 08A - 330

Consoles
Floor Console ..... Fig. 08A - 420
Overhead Console ..... Fig. 08A - 450

Pad & Bezel (LHD)
Figure 08A-120

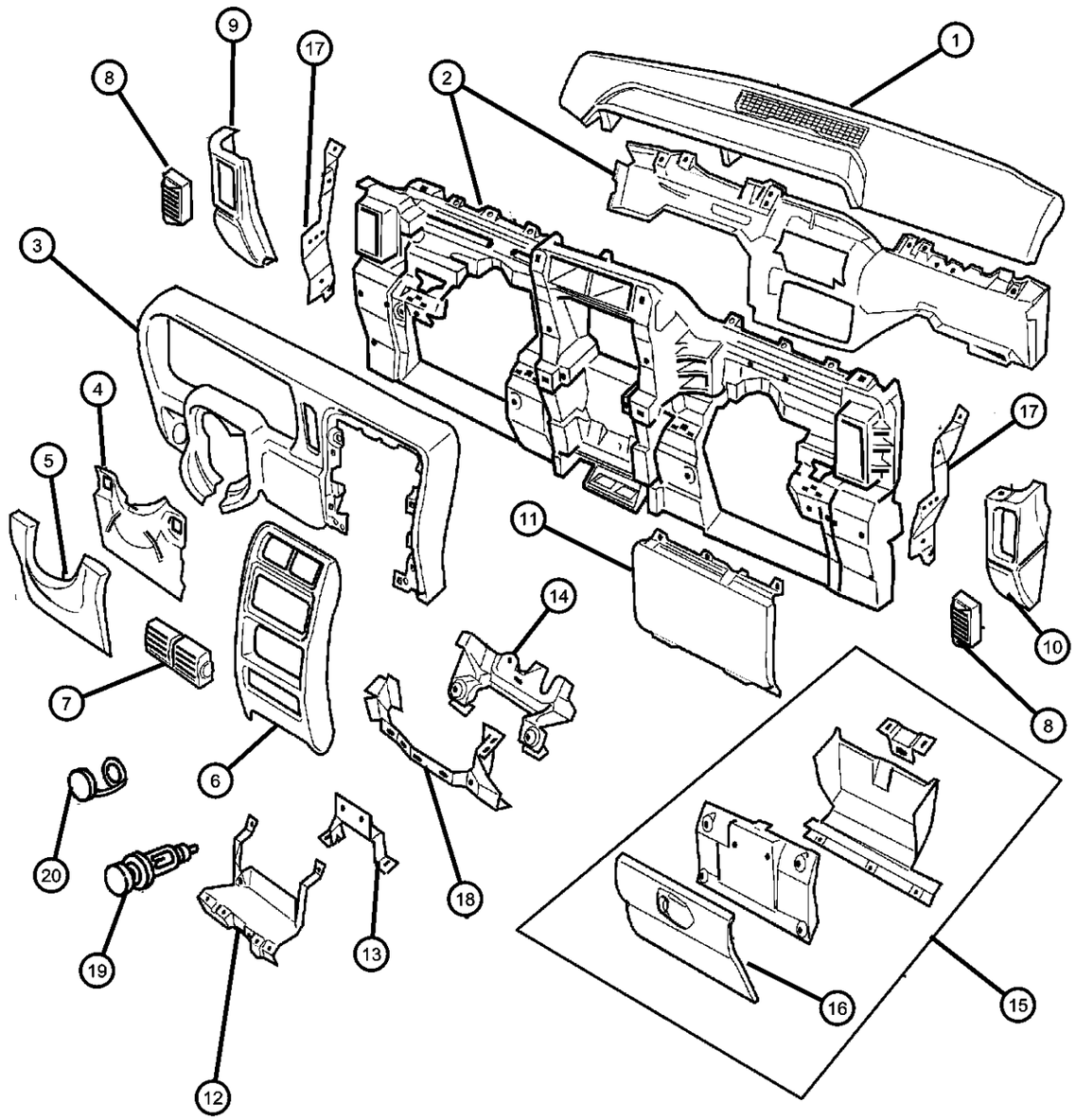

ITEM	PART NUMBER	QTY	LINE	SERIES	BODY	ENGINE	TRANS	TRIM	DESCRIPTION
1	5EB78LAZ	1	J, T						COVER, Instrument Panel, Agate
2	04897067AA	1	J, T						PANEL, Instrument Panel
3									BEZEL, Instrument Cluster
	5EJ84LAZ	1	J, T						2.5L/4.0L Engine
	5ER60LAZ	1	J, T						Diesel Engine
4	55115525	1							LINER, Steering Column Cover
5									COVER, Steering Column
	5EJ92RC3	1							Gray
	5EJ92RT6	1							Spice
6									BEZEL, Instrument Panel, Center
	5EB69LAZ	1							Agate
	5EN00LAZ	1							Woodgrain
7	5FS10LAZAB	2							OUTLET, Air Conditioning & Heater, Agate
8									OUTLET, Air Conditioning & Heater
	5DP54TAZ	1	J, T						Right (Agate)
	5DP55TAZ	1	J, T						Left (Agate)
9									CAP, Instrument Panel End
	5EJ891C3	1	J, T						Left (Gray)
	5EJ891T6	1	J, T						Left (Spice)
10									CAP, Instrument Panel End
	5EB771C3	1	J, T						Mist Gray
	5EB771T6	1	B, U						Spice/Saddle
11	5EB00LAZ	1	J, T						AIR BAG, Passenger, Agate
12	55115467	1	J, T						BRACKET, Air Bag
13	55115489	1							BRACKET, Instrument Panel
14	55115561	1	J, T						BRACKET, Instrument Cluster
15									GLOVE BOX, Instrument Panel
	5EB70RC3	1	J, T						Agate
	5EB70RT6	1	J, T						Spice
16									DOOR, Glove Box
	5EJ82RC3	1	J, T						Agate
	5EJ82RT6	1	J, T						Spice
17									SUPPORT, Instrument Panel

CHEROKEE (XJ)

SERIES	LINE	BODY	ENGINE	TRANSMISSION
L = LOWLINE	T = JEEP - 2WD B = JEEP - 2WD (RHD) J = JEEP - 4WD U = JEEP - 4WD (RHD)	72 = SPORT UTILITY 2-DR 74 = SPORT UTILITY 4-DR	ENC = 2.5L 4 Cyl Turbo Diesel Engine EPB = 2.5L 4 Cylinder Engine EPE = Engine - 2.5L Power Tech I-4 Cyl. ERH = 4.0L Power Tech I-6 Engine	DDQ = 5-Speed Manual Transmission DGS = 4-Speed Automatic AW4 Transmission DGO = ALL AUTOMATIC TRANSMISSIONS DBB = ALL MANUAL TRANSMISSIONS

AR = use ase required - = Non illustrrated part

Pad & Bezel (LHD)
Figure 08A-120

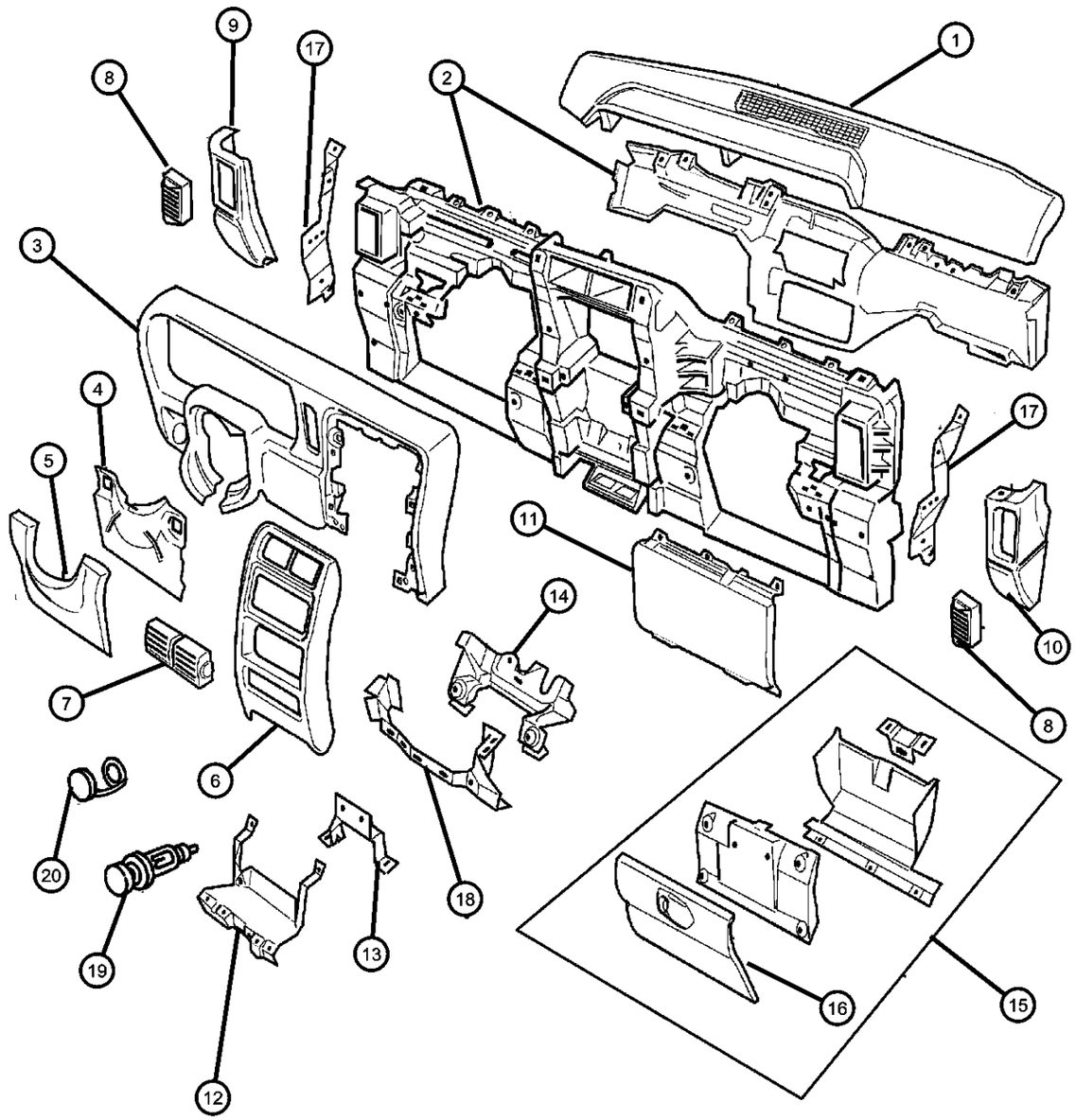

ITEM	PART NUMBER	QTY	LINE	SERIES	BODY	ENGINE	TRANS	TRIM	DESCRIPTION
	55037194AB	1	J, T						Right
	55037195AB	1	J, T						Left
18	55037395AA	1	J, T						REINFORCEMENT, Instrument Panel
19	04685370	1							KNOB AND ELEMENT, Cigar Lighter
20	04685247	1							POWER OUTLET, Cigar Lighter
-21	56009293	1							BASE, Cigar Lighter
-22									LABEL, Air Bag Warning
	04678784AA	1	J, T						Child Seat
	05265949	1	J, T						Air Bag
-23	55037414AA	2	J, T						BUMPER, Glove Box Door
-24	5EB72LAZ	1	J						DOOR, Passenger Air Bag, Agate, Cover Panel without Airbag
-25	06034833	4	J, T						CLIP, Push, .164-7.5
-26	04685248	1							CAP, Cigar Lighter
-27									BEZEL, Switch
	04897501AD	1							w/Rear Wiper
	04897502AD	1							w/Dual Road Foglamp/Heated Rear Window/Rear Wiper
	04897503AD	1							w/Rear Wiper/Heated Rear Window
	04897505AD	1	J, U						w/Rear Foglamp (EUROPE) w/4 Switch Opening

CHEROKEE (XJ)

SERIES	LINE	BODY	ENGINE	TRANSMISSION
L = LOWLINE	T = JEEP - 2WD B = JEEP - 2WD (RHD) J = JEEP - 4WD U = JEEP - 4WD (RHD)	72 = SPORT UTILITY 2-DR 74 = SPORT UTILITY 4-DR	ENC = 2.5L 4 Cyl Turbo Diesel Engine EPB = 2.5L 4 Cylinder Engine EPE = Engine - 2.5L Power Tech I-4 Cyl. ERH = 4.0L Power Tech I-6 Engine	DDQ = 5-Speed Manual Transmission DGS = 4-Speed Automatic AW4 Transmission DGO = ALL AUTOMATIC TRANSMISSIONS DBB = ALL MANUAL TRANSMISSIONS

Pad & Bezels (RHD)
Figure 08A-122

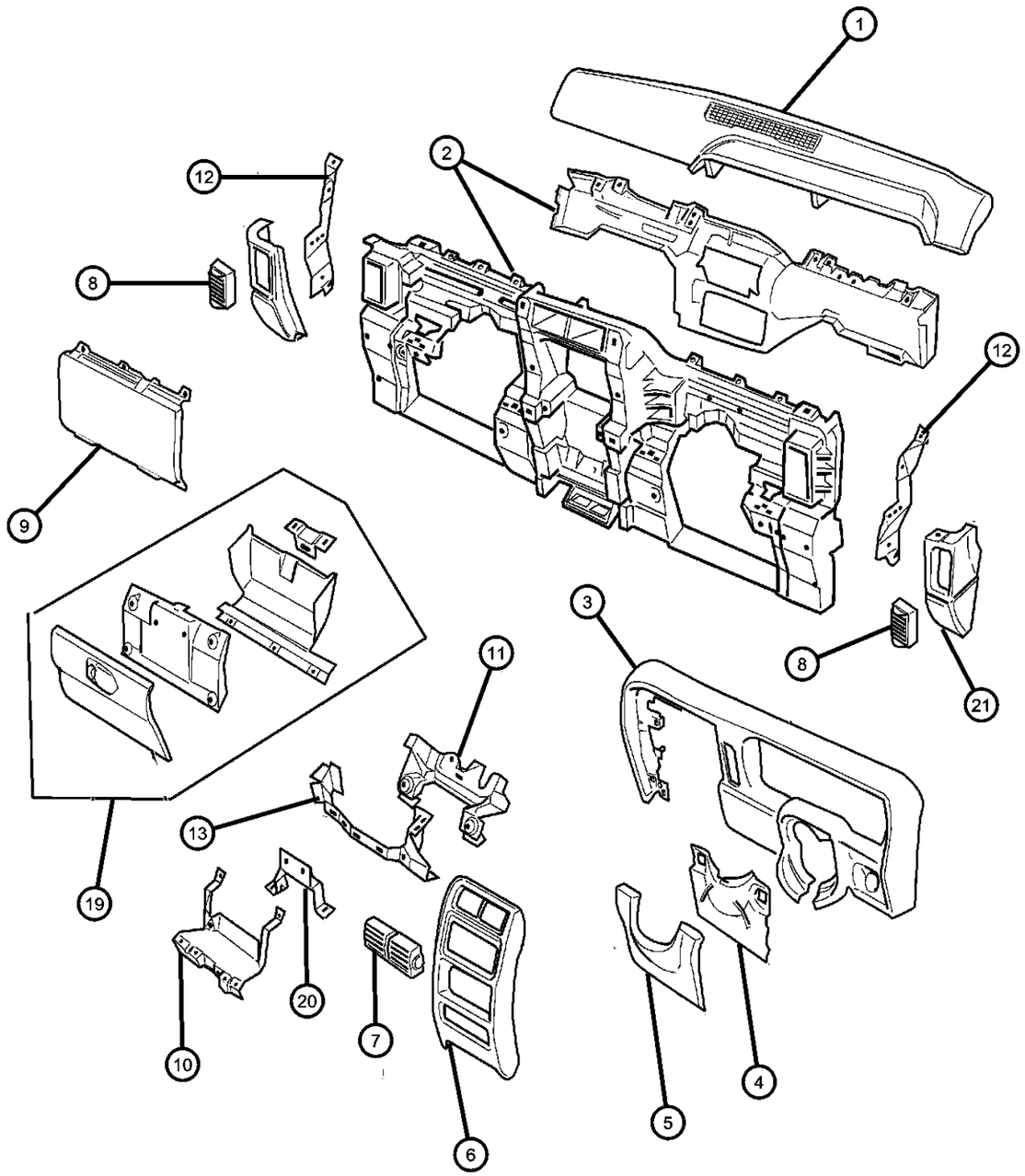

ITEM	PART NUMBER	QTY	LINE	SERIES	BODY	ENGINE	TRANS	TRIM	DESCRIPTION
1									COVER, Instrument Panel
	5EB71LAZ	1	B, U						Agate
	5EJ91LAZ	1	B, U						
2	04897066AA	1	B, U						PANEL, Instrument Panel
3	5EJ85LAZ	1	B, U						BEZEL, Instrument Cluster, Agate
4	55037411AA	1							LINER, Steering Column Cover
5									COVER, Steering Column
	5EJ92RC3	1							Gray
	5EJ92RT6	1							Spice
6									BEZEL, Instrument Panel, Center
	5EB69LAZ	1							Agate
	5EN00LAZ	1							Woodgrain
7	5FS10LAZAB	2							OUTLET, Air Conditioning & Heater, Agate
8									OUTLET, Air Conditioning & Heater
	5DP54TAZ	1	B, U						Right (Agate)
	5DP55TAZ	1	B, U						Left (Agate)
9	5EB01LAZ	1	B, U						AIR BAG, Passenger, LHD
10	55115466	1	B, U						BRACKET, Air Bag
11	55115561	1	B, U						BRACKET, Instrument Cluster
12									SUPPORT, Instrument Panel
	55037194AB	1	B, U						Right
	55037195AB	1	B, U						Left
13	55037394AA	1	B, U						REINFORCEMENT, Instrument Panel
-14	06034833	2	B, U						CLIP, Push, .164-7.5
-15	05265949	1	B, U						LABEL, Air Bag Warning, Air Bag
-16	5EB67LAZ	1	B						DOOR, Passenger Air Bag, Agate
-17	55115470	1	B, U						STRIKER, Glove Box Door Latch
-18	55037414AA	2	B, U						BUMPER, Glove Box Door
19									GLOVE BOX, Instrument Panel
	5EE07RC3	1	B, U						Mist Gray
	5EE07RT6	1	B, U						Spice/Saddle
20	55115489	1							BRACKET, Instrument Panel

CHEROKEE (XJ)

SERIES	LINE	BODY	ENGINE	TRANSMISSION
L = LOWLINE	T = JEEP - 2WD B = JEEP - 2WD (RHD) J = JEEP - 4WD U = JEEP - 4WD (RHD)	72 = SPORT UTILITY 2-DR 74 = SPORT UTILITY 4-DR	ENC = 2.5L 4 Cyl Turbo Diesel Engine EPB = 2.5L 4 Cylinder Engine EPE = Engine - 2.5L Power Tech I-4 Cyl. ERH = 4.0L Power Tech I-6 Engine	DDQ = 5-Speed Manual Transmission DGS = 4-Speed Automatic AW4 Transmission DGO = ALL AUTOMATIC TRANSMISSIONS DBB = ALL MANUAL TRANSMISSIONS

Pad & Bezels (RHD)
Figure 08A-122

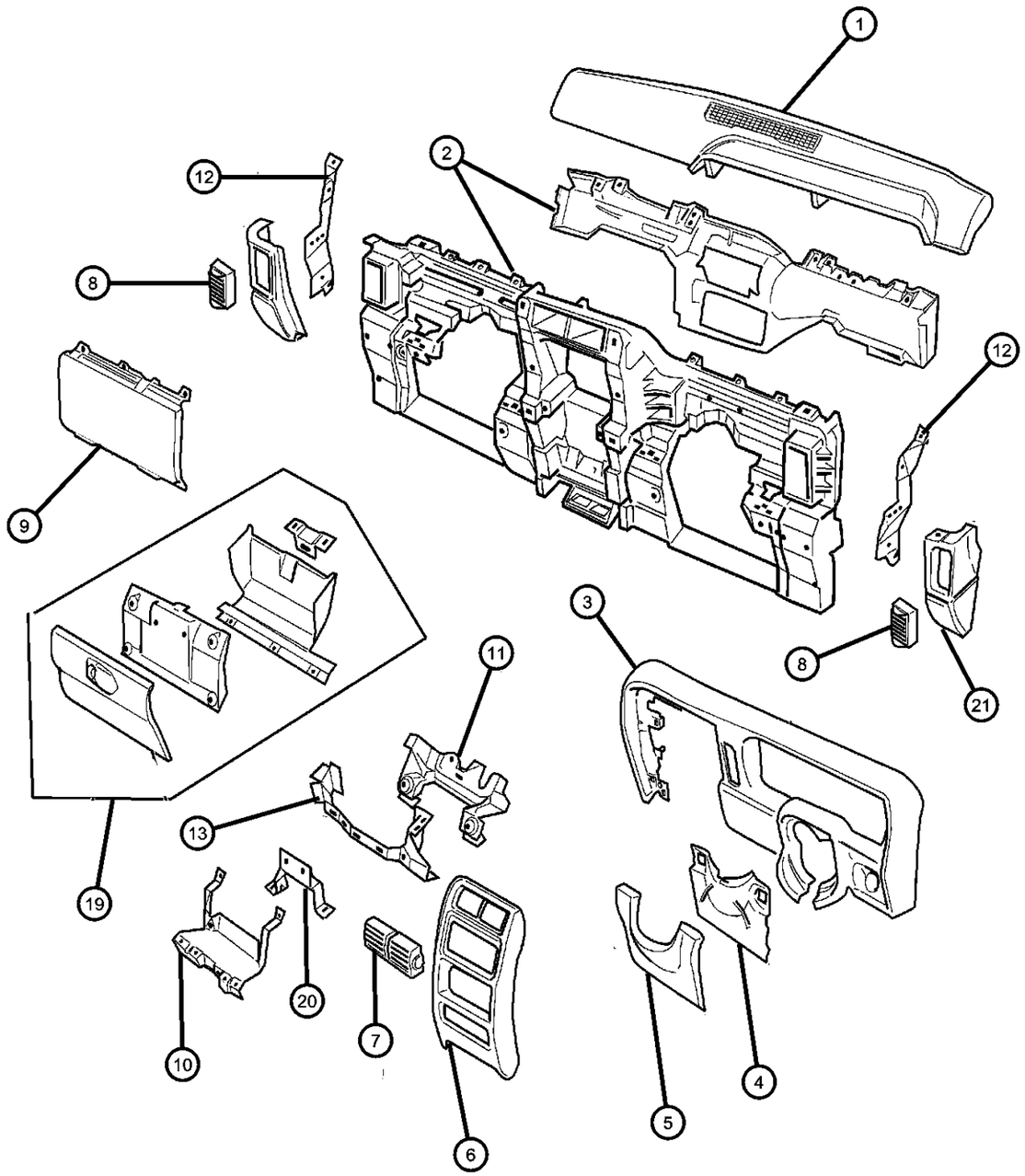

ITEM	PART NUMBER	QTY	LINE	SERIES	BODY	ENGINE	TRANS	TRIM	DESCRIPTION
21									CAP, Instrument Panel End
	5EB761C3	1	B, U						Mist Gray
	5EB761T6	1	B, U						Spice/Saddle

CHEROKEE (XJ)

SERIES	LINE	BODY	ENGINE	TRANSMISSION
L = LOWLINE	T = JEEP - 2WD B = JEEP - 2WD (RHD) J = JEEP - 4WD U = JEEP - 4WD (RHD)	72 = SPORT UTILITY 2-DR 74 = SPORT UTILITY 4-DR	ENC = 2.5L 4 Cyl Turbo Diesel Engine EPB = 2.5L 4 Cylinder Engine EPE = Engine - 2.5L Power Tech I-4 Cyl. ERH = 4.0L Power Tech I-6 Engine	DDQ = 5-Speed Manual Transmission DGS = 4-Speed Automatic AW4 Transmission DGO = ALL AUTOMATIC TRANSMISSIONS DBB = ALL MANUAL TRANSMISSIONS

Cluster
Figure 08A-220

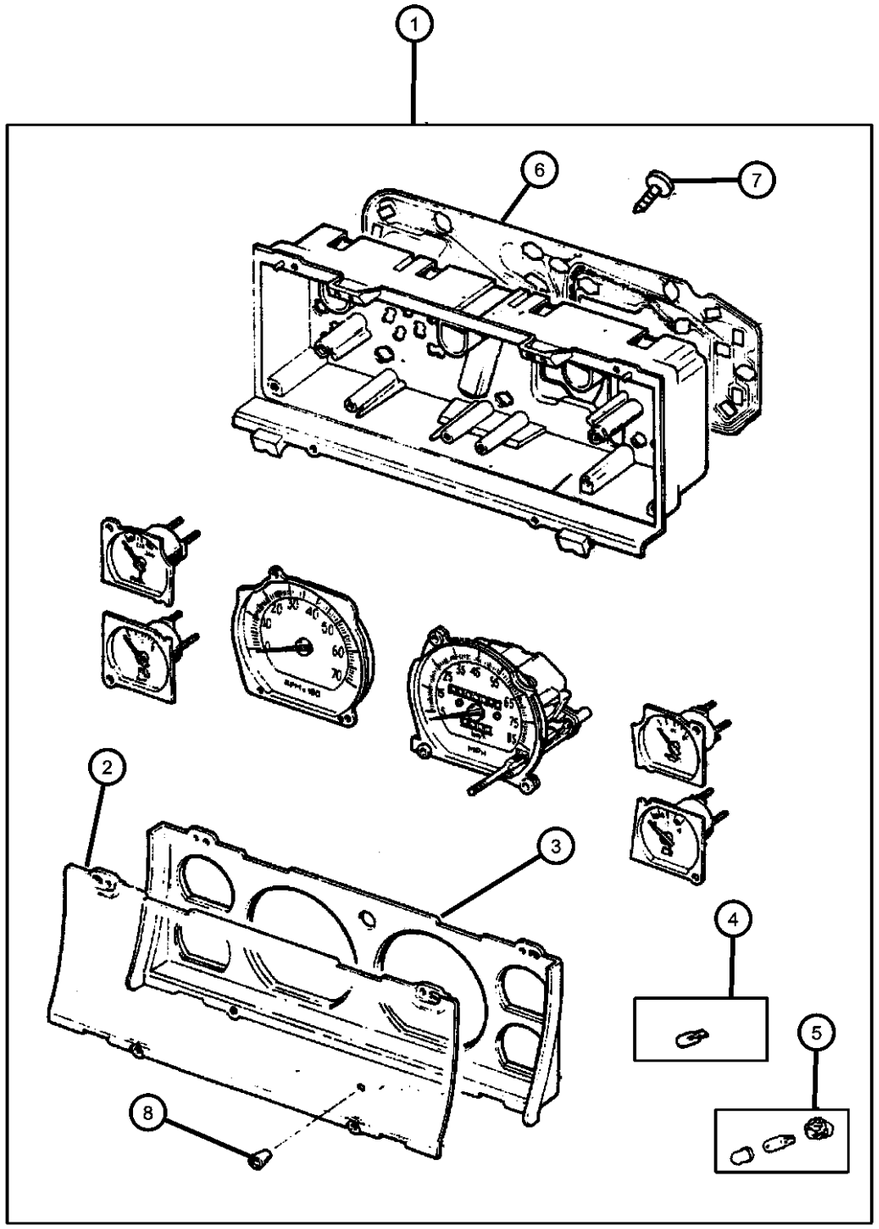

ITEM	PART NUMBER	QTY	LINE	SERIES	BODY	ENGINE	TRANS	TRIM	DESCRIPTION
1									CLUSTER, With Chime Module
	56009726	1							LHD 2.5L & 4.0L w/Miles (Lowline)
	56009727	1							LHD/RHD 2.5L & 4.0L w/100 Miles (High Line)
	56009728	1							LHD/RHD 2.5L & 4.0L w/Kilo (Lowline)
	56009729	1							LHD/RHD 2.5L & 4.0L w/Kilo (High Line)
	56009730	1							LHD/RHD-Diesel w/200 Kilo Primary
	56009731	1	B, U						RHD 2.5L & 4.0L w/120/125 Miles (High Line)
	56009732	1	B, U						RHD-Diesel w/120/125 Miles
	56009733	1	B, U						RHD 2.5L & 4.0L w/Kilo (High Line)
	56009734	1	B, U						RHD-Diesel w/200 Kilo w/o Secondary
	56009735	1	J, T						4.0L w/Miles (Police)
	56009736	1	J, T						4.0L w/Kilo (Police)
2	04874345	1							LENS, Cluster
3	04874344	1							MASK, Instrument Cluster
4	L000PC74	1							BULB, PC74
5	04874349	5							BULB AND SOCKET
6	04874348	1							COVER, Cluster
7	06032723	6							SCREW, Self Tapping, M4.2x1.69x19.05
8	04874346	1							GROMMET, Speedometer Trip Reset
-9	04874346	1							BOARD, Circuit, Serviced w/Item # 1, (NOT SERVICED)
-10									INDICATOR
	56009613	1	J, T						Tele Tale Module Low Coolant, Water in Fuel Warning, Left Hand Drive, Diesel, Export
	56009639	1	B, U						, Right Hand Drive, Diesel, Export

CHEROKEE (XJ)

SERIES	LINE	BODY	ENGINE	TRANSMISSION
L = LOWLINE	T = JEEP - 2WD B = JEEP - 2WD (RHD) J = JEEP - 4WD U = JEEP - 4WD (RHD)	72 = SPORT UTILITY 2-DR 74 = SPORT UTILITY 4-DR	ENC = 2.5L 4 Cyl Turbo Diesel Engine EPB = 2.5L 4 Cylinder Engine EPE = Engine - 2.5L Power Tech I-4 Cyl. ERH = 4.0L Power Tech I-6 Engine	DDQ = 5-Speed Manual Transmission DGS = 4-Speed Automatic AW4 Transmission DGO = ALL AUTOMATIC TRANSMISSIONS DBB = ALL MANUAL TRANSMISSIONS

Radio
Figure 08A-310

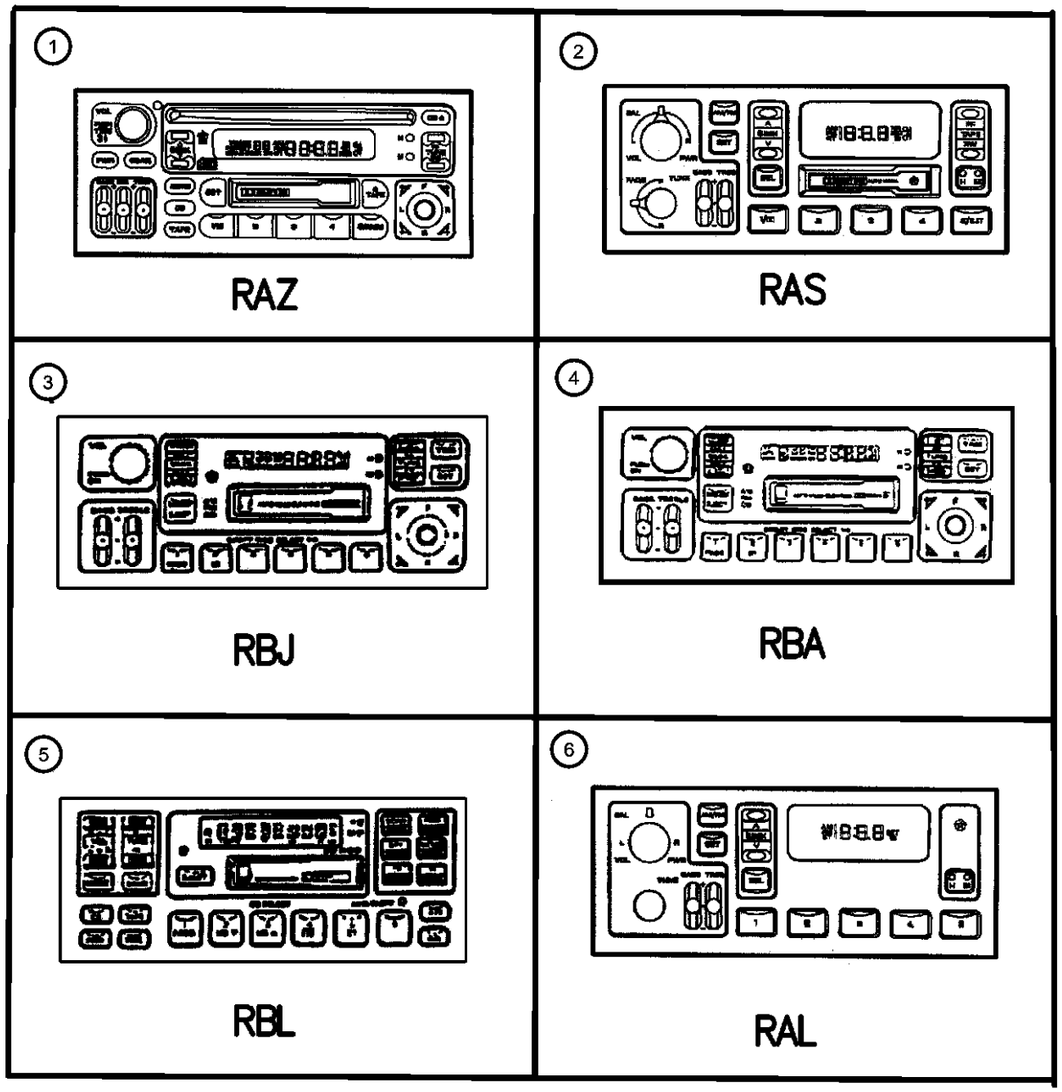

ITEM	PART NUMBER	QTY	LINE	SERIES	BODY	ENGINE	TRANS	TRIM	DESCRIPTION

RAL=AM/FM Stereo
RAS=AM/FM Cassette
RAZ=AM/FM w/Cassette & CD
RBA=AM/FM w/Cassette & CD Changer Control (Argentina, Brazil, Paraguay & Uruguay)
RBJ=Midline AM/FM w/Cassette & CD Changer Control (Japan)
RBL=AM/FM/MW/RDS Cassette & CD Changer Control

1	04704382AB	1	RADIO, AM/FM with CD and Cassette, (RAZ)
2	04858556	1	RADIO, AM/FM Cassette, (RAS)
3	04704393AB	1	RADIO, AM/FM with CD, (RBJ)
4	04704392AB	1	RADIO, AM/FM with CD, (RBA)
5	05269484	1	RADIO, (RBL)
6	04858560AB	1	RADIO, AM/FM Stereo, (RAL)
-7	56007653	1	AMPLIFIER, Radio

CHEROKEE (XJ)

SERIES	LINE	BODY	ENGINE	TRANSMISSION
L = LOWLINE	T = JEEP - 2WD B = JEEP - 2WD (RHD) J = JEEP - 4WD U = JEEP - 4WD (RHD)	72 = SPORT UTILITY 2-DR 74 = SPORT UTILITY 4-DR	ENC = 2.5L 4 Cyl Turbo Diesel Engine EPB = 2.5L 4 Cylinder Engine EPE = Engine - 2.5L Power Tech I-4 Cyl. ERH = 4.0L Power Tech I-6 Engine	DDQ = 5-Speed Manual Transmission DGS = 4-Speed Automatic AW4 Transmission DGO = ALL AUTOMATIC TRANSMISSIONS DBB = ALL MANUAL TRANSMISSIONS

Speakers
Figure 08A-320

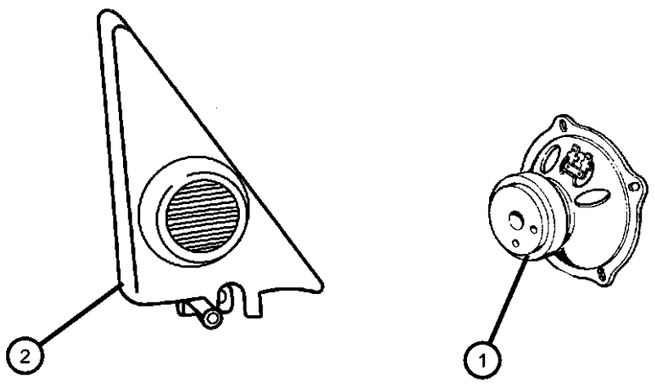

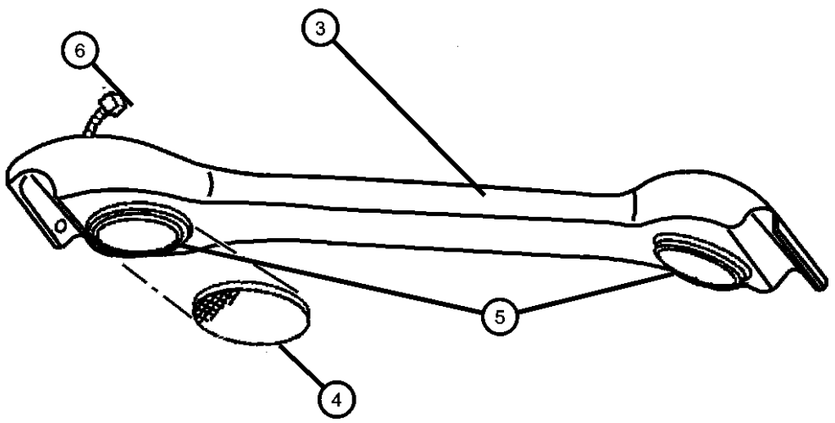

ITEM	PART NUMBER	QTY	LINE	SERIES	BODY	ENGINE	TRANS	TRIM	DESCRIPTION
RCB=Two Speaker System RCD=Four Speaker System RCG=Six Premium Speaker System (Infinity)									
1									SPEAKER, Door
	56008750AB	2							[RCG]
	56008751AB	2							[RCB,RCD]
2									COVER, Mirror Opening
	5FM02RC3AB	1							Mist Gray w/2 or 4 peaker System, Right
	5FM02RT6AB	1							Spice/Saddle w/2 or 4 peaker System, Right
	5FM03RC3AB	1							Mist Gray w/2 or 4 peaker System, Left
	5FM03RT6AB	1							Spice/Saddle w/2 or 4 peaker System, Left
	5FV14RC3AB	1							Mist Gray w/6 Speaker System, Right
	5FV14RT6AB	1							Spice/Saddle w/6 Speaker System, Right
	5FV15RC3AB	1							Mist Gray w/6 Speaker System, Left
	5FV15RT6AB	1							Spice/Saddle w/6 Speaker System, Left
3									HOUSING, Speaker
	0QH91RC3	1							Mist Gray
	0QH91RT6	1							Spice/Saddle
4	04882388	1							GRILLE, Speaker
5									SPEAKER, Sound Bar
	56008754	2							[RCD,RCR]
	56008756	2							[RCG]
6	05003856AA	1							WIRING, Soundbar, Base Model (RCD)
-7	05003856AA	1							BRACKET, Speaker, (NOT REQUIRED)

CHEROKEE (XJ)

SERIES	LINE	BODY	ENGINE	TRANSMISSION
L = LOWLINE	T = JEEP - 2WD B = JEEP - 2WD (RHD) J = JEEP - 4WD U = JEEP - 4WD (RHD)	72 = SPORT UTILITY 2-DR 74 = SPORT UTILITY 4-DR	ENC = 2.5L 4 Cyl Turbo Diesel Engine EPB = 2.5L 4 Cylinder Engine EPE = Engine - 2.5L Power Tech I-4 Cyl. ERH = 4.0L Power Tech I-6 Engine	DDQ = 5-Speed Manual Transmission DGS = 4-Speed Automatic AW4 Transmission DGO = ALL AUTOMATIC TRANSMISSIONS DBB = ALL MANUAL TRANSMISSIONS

Antenna
Figure 08A-330

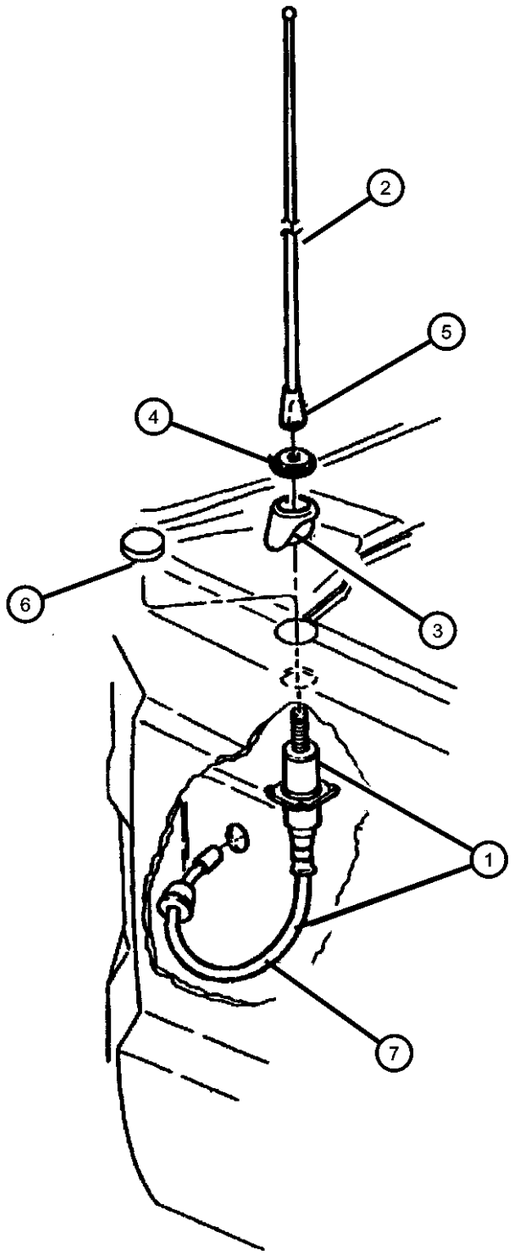

ITEM	PART NUMBER	QTY	LINE	SERIES	BODY	ENGINE	TRANS	TRIM	DESCRIPTION
1	56038505AB	1							BASE, Antenna, USA/CANADA (Fixed)
2									ANTENNA
	56022199AA	1	J, T						EUROPE/Power Antenna
		1	B, U						EUROPE/Power Antenna
3	56038507AB	1							ESCUTCHEON, Antenna
4	56007570AB	1							CAP NUT, Antenna
5	56008917	1							MAST, Antenna
6	56038506	1							PLUG, Antenna Hole
7									CABLE, Antenna
	56038508AD	1	J, T						Fixed/Power Antenna
	56038509AB	1	B, U						Fixed/Power Antenna
-8									GROMMET, Antenna Mounting
	56022200AA	1	J, T						EUROPE/Power Antenna
		1	B, U						EUROPE/Power Antenna

CHEROKEE (XJ)

SERIES	LINE	BODY	ENGINE	TRANSMISSION
L = LOWLINE	T = JEEP - 2WD B = JEEP - 2WD (RHD) J = JEEP - 4WD U = JEEP - 4WD (RHD)	72 = SPORT UTILITY 2-DR 74 = SPORT UTILITY 4-DR	ENC = 2.5L 4 Cyl Turbo Diesel Engine EPB = 2.5L 4 Cylinder Engine EPE = Engine - 2.5L Power Tech I-4 Cyl. ERH = 4.0L Power Tech I-6 Engine	DDQ = 5-Speed Manual Transmission DGS = 4-Speed Automatic AW4 Transmission DGO = ALL AUTOMATIC TRANSMISSIONS DBB = ALL MANUAL TRANSMISSIONS

Floor Console
Figure 08A-420

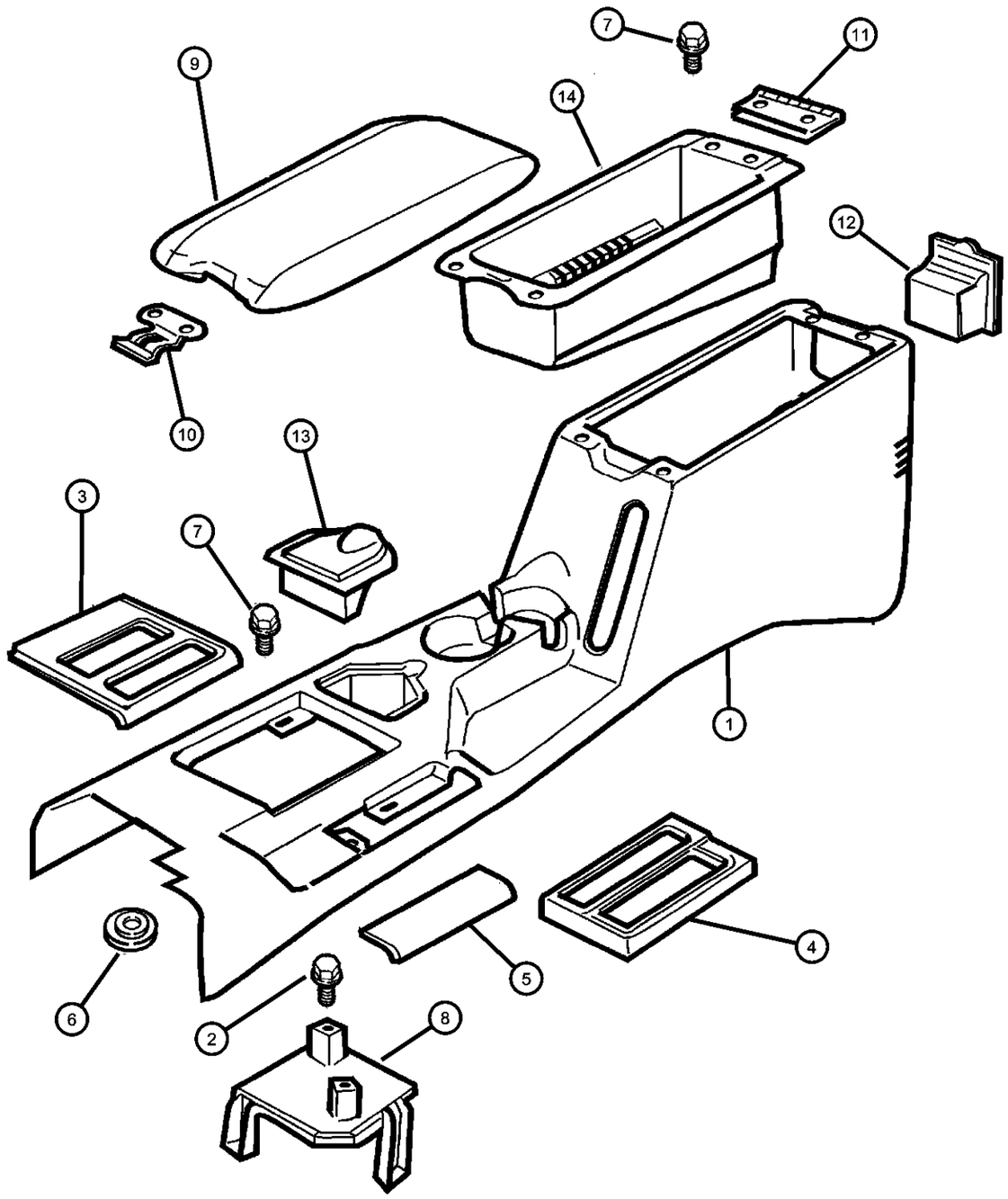

ITEM	PART NUMBER	QTY	LINE	SERIES	BODY	ENGINE	TRANS	TRIM	DESCRIPTION
1									CONSOLE, Base
	0QX101C3AA	1							Mist Gray
	0QX101T6AA	1							Spice Saddle
2	0QX101T6AA	1							SCREW, .164-18x.500, (NOT SERVICED),
3									BEZEL, Console PRNDL
	5EK03LAZ	1	J, T						
	5EK07LAZ	1	B, U						
4									BEZEL, Transfer Case
	5EK13LAZ	1	U						With 242 Transfer Case
	5EK17LAZ	1	U						With 231 Transfer Case
	5EL86LAZ	1	J						With 242 Transfer Case
	5EL90LAZ	1	J						With 231 Transfer Case
5									COVER, Transfer Case Lever Hole
	5EU66RC3	1	B, T						Mist Gray
	5EU66RT6	1	B, T						Spice Saddle
6	34202365	4							WASHER
7	06032723	6							SCREW, Self Tapping, M4.2x1.69x19.05
8	55115543	1							BRACKET, Floor Console
9									LID, Floor Console Bin
	5EJ50RC3	1							Mist Gray
	5EJ50RT6	1							Spice Saddle
10	55115622	1							LATCH, Armrest Lid
11	55352505	1							HINGE, Floor Console Lid
12	5EK10LAZ	1							ASH RECEIVER, Floor Console, Rear (Agate)
13	5EB68LAZ	1							ASH RECEIVER, Floor Console, Front (Agate)
14	55115523	1							BIN, Floor Console
-15	34201314	4			74				SCREW, Tapping Round Head, .164x18x1.232
-16	04524343	2							BUMPER, Glove Box Door
-17	55037315	2							CLIP
-18	06034833	2							CLIP, Push, .164-7.5

CHEROKEE (XJ)

SERIES	LINE	BODY	ENGINE	TRANSMISSION
L = LOWLINE	T = JEEP - 2WD B = JEEP - 2WD (RHD) J = JEEP - 4WD U = JEEP - 4WD (RHD)	72 = SPORT UTILITY 2-DR 74 = SPORT UTILITY 4-DR	ENC = 2.5L 4 Cyl Turbo Diesel Engine EPB = 2.5L 4 Cylinder Engine EPE = Engine - 2.5L Power Tech I-4 Cyl. ERH = 4.0L Power Tech I-6 Engine	DDQ = 5-Speed Manual Transmission DGS = 4-Speed Automatic AW4 Transmission DGO = ALL AUTOMATIC TRANSMISSIONS DBB = ALL MANUAL TRANSMISSIONS

Overhead Console
Figure 08A-450

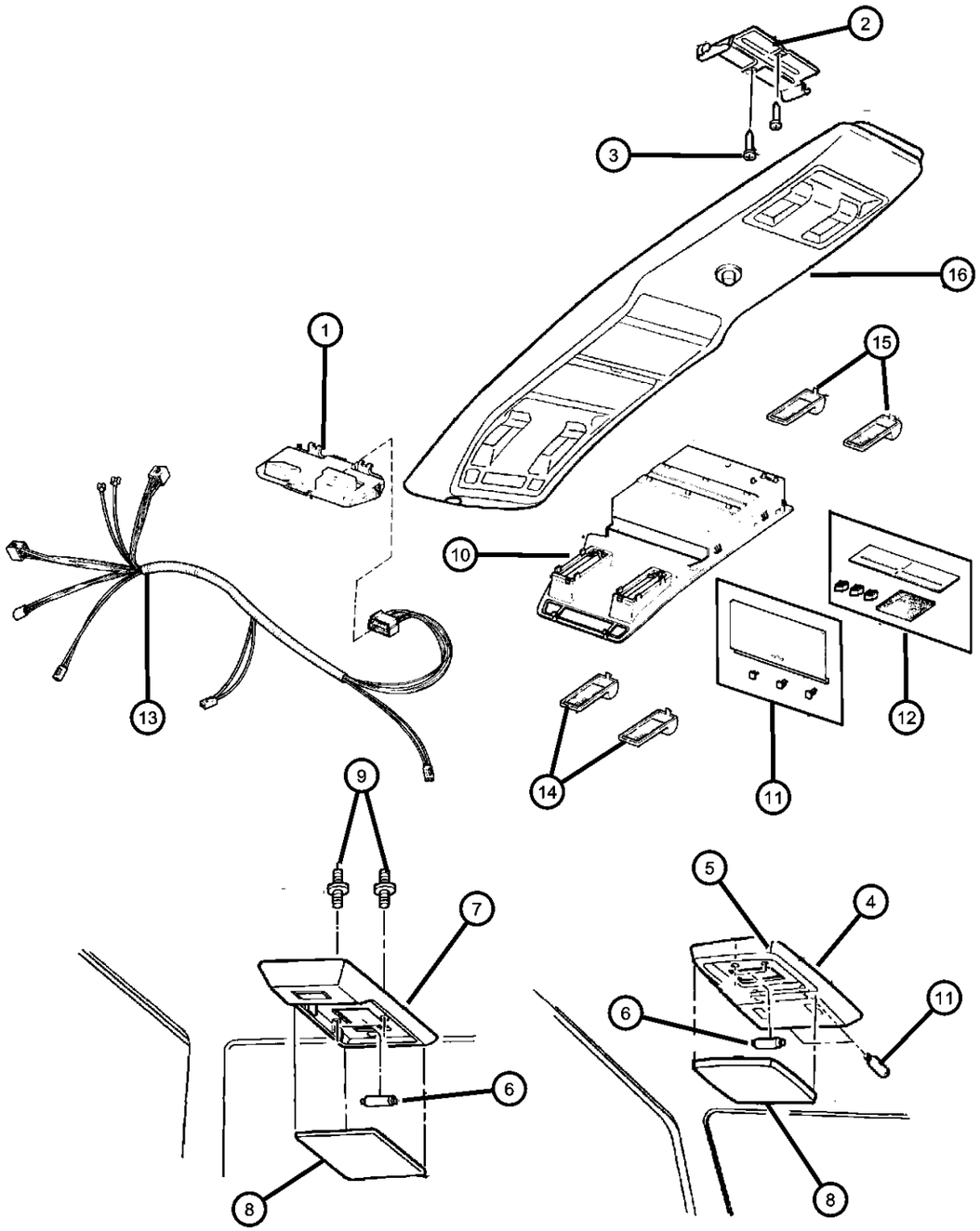

ITEM	PART NUMBER	QTY	LINE	SERIES	BODY	ENGINE	TRANS	TRIM	DESCRIPTION
1	56009380	1							MODULE, Compass Temperature
2	55352518	1							BRACKET, Overhead Console
3	55352518	1							SCREW, Pan Head Tapping, .164-32x.625, (NOT SERVICED)
4	5BA67TC3	1							LAMP, Dome And Reading, Gray (Paint as Required)
5	5BA68TC3	1							LAMP, Dome, W/o Reading Lamp (Gray) Paint as Required
6	L0000561	1							BULB, 561
7									LAMP, Cargo
	5BA70TC3	1							Gray (P.A.R.)
	5BA70TT6	1							Spice (P.A.R.)
8	56000191	1							LENS, Dome Lamp
9	06503673	2							STUD, Double Ended, M4.2x1.41/M3.25x51
10	04761436	1							HOUSING AND DOOR, Overhead Console
11	04761965	1							DOOR, Garage Door Opener
12	04798405	1							ADAPTER, Garage Door Button
13									WIRING, Overhead Console
	04882780	1							w/Keyless Entry
	56009702	1							w/o Keyless Entry
14									LENS, Reading Lamp
	05268175	1							Right (Front)
	05268176	1							Left (Front)
15									LENS, Reading Lamp
	05268177	1							Left (Rear)
	05268178	1							Right (Rear)
16									HOUSING, Overhead Console
	0QL651C3	1							Full Console Gray w/o Immobilizer
	0QL651T6	1							Full Console Spice w/o Immobilizer
	0QL741C3	1							Full Console Gray w/Immobilizer
	0QL741T6	1							Full Console Spice w/Immobilizer
-17	04761966	1							SWITCH, Minitrip

CHEROKEE (XJ)

SERIES	LINE	BODY	ENGINE	TRANSMISSION
L = LOWLINE	T = JEEP - 2WD B = JEEP - 2WD (RHD) J = JEEP - 4WD U = JEEP - 4WD (RHD)	72 = SPORT UTILITY 2-DR 74 = SPORT UTILITY 4-DR	ENC = 2.5L 4 Cyl Turbo Diesel Engine EPB = 2.5L 4 Cylinder Engine EPE = Engine - 2.5L Power Tech I-4 Cyl. ERH = 4.0L Power Tech I-6 Engine	DDQ = 5-Speed Manual Transmission DGS = 4-Speed Automatic AW4 Transmission DGO = ALL AUTOMATIC TRANSMISSIONS DBB = ALL MANUAL TRANSMISSIONS

Group - 9

Engine Mounting

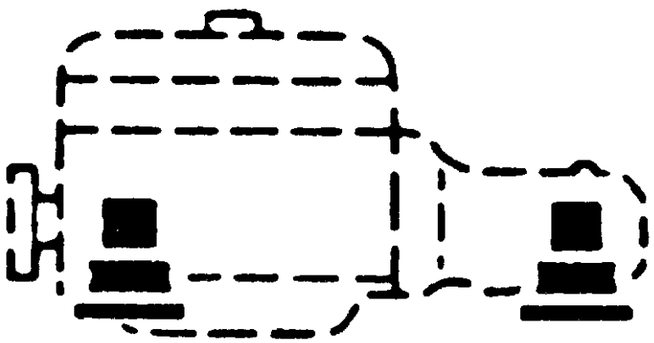

009-100 Engine Mounting 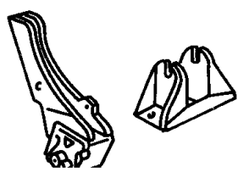			

Group - 9 Engine Mounting

Illustration Title — Group-Fig. No.

Engine Mounting

Engine Mounting, Front ..... Fig. 9 - 110
Engine Mounting, Rear ..... Fig. 9 - 120
Engine Mounting, Front ..... Fig. 9 - 130
Engine Mounting, Rear ..... Fig. 9 - 140
Engine Mounting, Front ..... Fig. 9 - 150
Engine Mounting, Rear ..... Fig. 9 - 160

Engine Mounting, Front
Figure 9-110

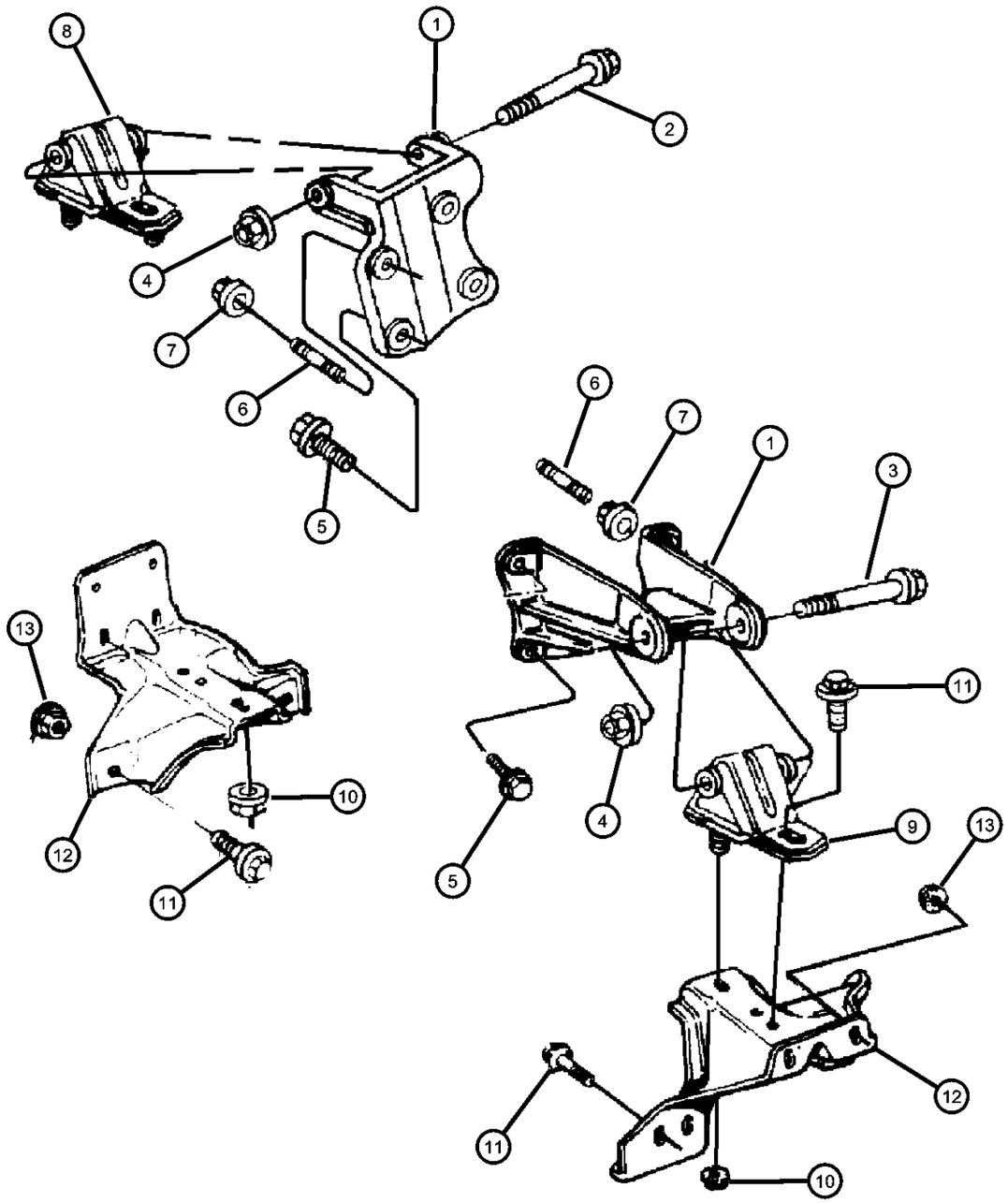

ITEM	PART NUMBER	QTY	LINE	SERIES	BODY	ENGINE	TRANS	TRIM	DESCRIPTION
NOTE: EP0=All 2.5L Gas Engines DBB=All Manual Transmissions DGD=3 Speed Automatic Tranmission									
1									BRACKET, Engine Mount
	52017731	1				EP0	DBB		Right
	52018450	1				EP0	DGD		Right
	52058877	1				EP0	DGD		Left
	52060003	1				EP0	DBB		Left
2	06101742	1				EP0			BOLT, Square Neck, M12x1.75x130Right
3	34201959	1				EP0			BOLT, Hex Flange Head, M12-1.75x125Left
4	06502697	2							NUT, Hex Flange Lock, M12x1.75
5	06034989	5				EP0			SCREW, Hex Head, .375-16x1.125
6	06033883	1				EP0			STUD, .375-16x2.00"
7	00152344	1				EP0	DBB		NUT, Hex Flange Lock, .375-16
8	J3242728	1	B			EP0	DBB		INSULATOR, Engine MountRight
9	52007394	1				EP0	DBB		CUSHION, Engine SupportLeft
10	06502135	4							NUT, Hex Flange, M10x1.5
11	06504511	1				EP0			SCREW AND WASHER, M10x1.5x40
12									BRACKET, Engine Mount
	52003005	1				EP0	DBB		Left
	52019010AB	1	J, T			ER0			
	52020219	1				EP0	DGD		Left
	52058808	1	J			EP0	DBB		Right
13	34201416	4				EN0			NUT, Hex Flange, M8x1.25

CHEROKEE (XJ)

SERIES	LINE	BODY	ENGINE	TRANSMISSION
L = LOWLINE	T = JEEP - 2WD B = JEEP - 2WD (RHD) J = JEEP - 4WD U = JEEP - 4WD (RHD)	72 = SPORT UTILITY 2-DR 74 = SPORT UTILITY 4-DR	ENC = 2.5L 4 Cyl Turbo Diesel Engine EPB = 2.5L 4 Cylinder Engine EPE = Engine - 2.5L Power Tech I-4 Cyl. ERH = 4.0L Power Tech I-6 Engine	DDQ = 5-Speed Manual Transmission DGS = 4-Speed Automatic AW4 Transmission DGO = ALL AUTOMATIC TRANSMISSIONS DBB = ALL MANUAL TRANSMISSIONS

Engine Mounting, Rear
Figure 9-120

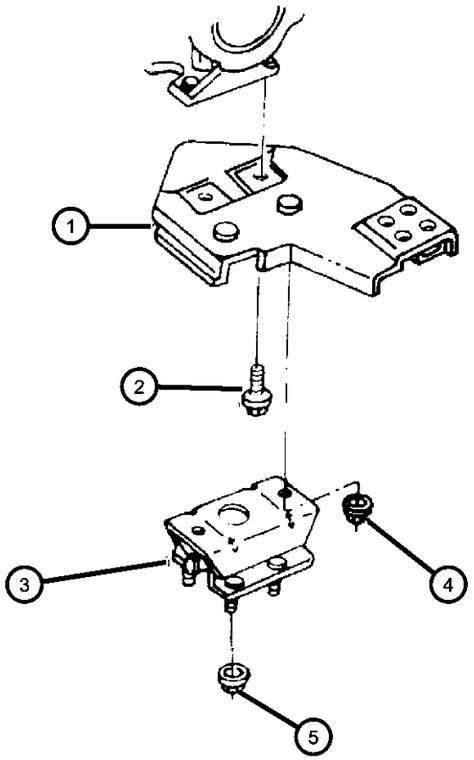

ITEM	PART NUMBER	QTY	LINE	SERIES	BODY	ENGINE	TRANS	TRIM	DESCRIPTION
NOTE: EP0=All 2.5L Gas Engines DBB=All Manual Transmissions									
1	52058885	1				EP0	DBB		BRACKET, Support Rear
2	52058885	1							BOLT, (NOT SERVICED)
3									INSULATOR, Engine Mount
	52001180	1	J			EP0	DBB		
	52007393	1	B			EP0	DBB		
4	06502135	2							NUT, Hex Flange, M10x1.5
5	06101695	4							NUT, Hex Flange Lock, M8x1.25

CHEROKEE (XJ)

SERIES	LINE	BODY	ENGINE	TRANSMISSION
L = LOWLINE	T = JEEP - 2WD B = JEEP - 2WD (RHD) J = JEEP - 4WD U = JEEP - 4WD (RHD)	72 = SPORT UTILITY 2-DR 74 = SPORT UTILITY 4-DR	ENC = 2.5L 4 Cyl Turbo Diesel Engine EPB = 2.5L 4 Cylinder Engine EPE = Engine - 2.5L Power Tech I-4 Cyl. ERH = 4.0L Power Tech I-6 Engine	DDQ = 5-Speed Manual Transmission DGS = 4-Speed Automatic AW4 Transmission DGO = ALL AUTOMATIC TRANSMISSIONS DBB = ALL MANUAL TRANSMISSIONS

Engine Mounting, Front
Figure 9-130

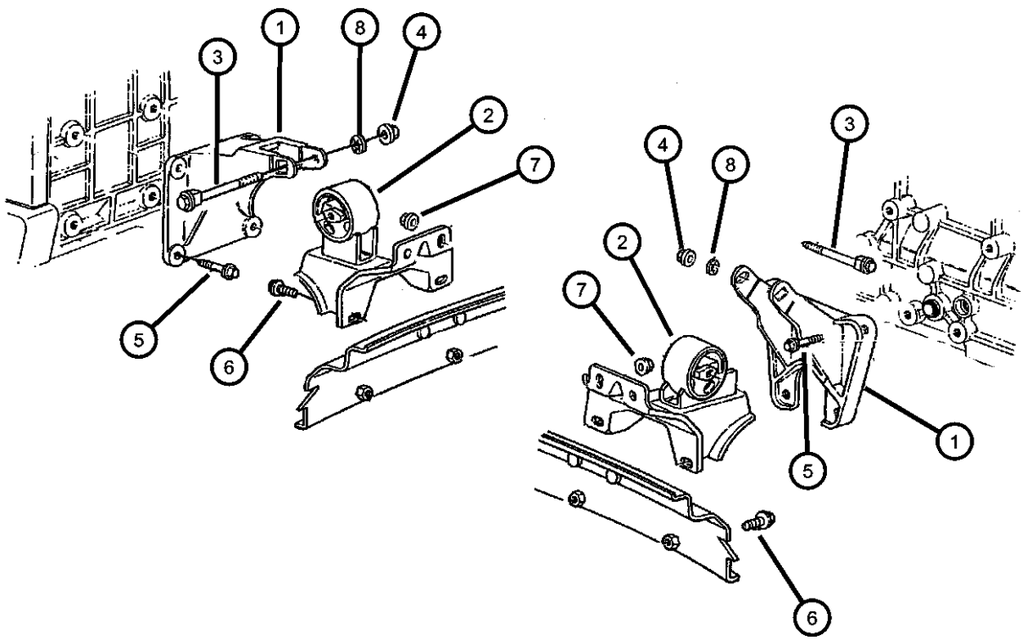

ITEM	PART NUMBER	QTY	LINE	SERIES	BODY	ENGINE	TRANS	TRIM	DESCRIPTION
NOTE: EN0=All 2.5L Diesel Engines DDQ=5 Speed Manual Transmission									
1									BRACKET, Engine Mount
	52059102	1				EN0			Left
	52059114	1				EN0			Right
2									BRACKET, Engine Mount
	52059200	1				EN0			Right
	52059201	1				EN0			Left
3	06101742	2				EN0	DDQ		BOLT, Square Neck, M12x1.75x130
4	06502697	2							NUT, Hex Flange Lock, M12x1.75
5	06101238	8				EN0			SCREW, Header Point, M10x1.50x25.00
6	06504511	4				EN0			SCREW AND WASHER, M10x1.5x40
7	34201416	4				EP0			NUT, Hex Flange, M8x1.25
8	34201416	4							NUT, M12, (NOT SERVICED)

CHEROKEE (XJ)

SERIES	LINE	BODY	ENGINE	TRANSMISSION
L = LOWLINE	T = JEEP - 2WD B = JEEP - 2WD (RHD) J = JEEP - 4WD U = JEEP - 4WD (RHD)	72 = SPORT UTILITY 2-DR 74 = SPORT UTILITY 4-DR	ENC = 2.5L 4 Cyl Turbo Diesel Engine EPB = 2.5L 4 Cylinder Engine EPE = Engine - 2.5L Power Tech I-4 Cyl. ERH = 4.0L Power Tech I-6 Engine	DDQ = 5-Speed Manual Transmission DGS = 4-Speed Automatic AW4 Transmission DGO = ALL AUTOMATIC TRANSMISSIONS DBB = ALL MANUAL TRANSMISSIONS

Engine Mounting, Rear
Figure 9-140

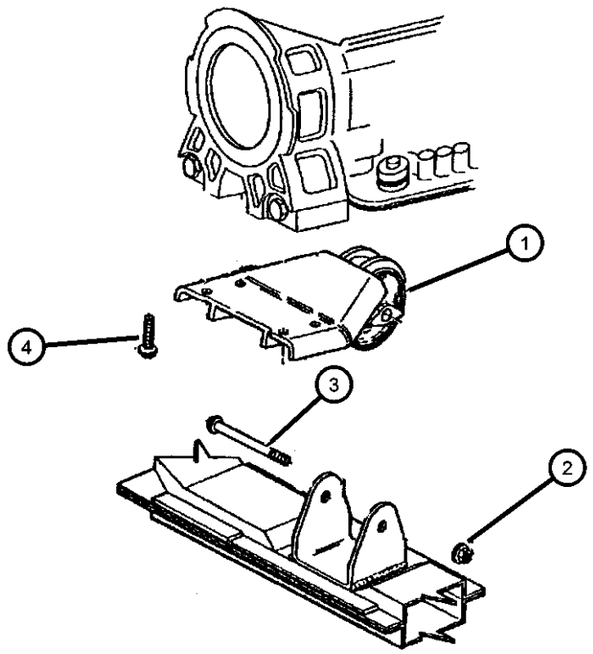

ITEM	PART NUMBER	QTY	LINE	SERIES	BODY	ENGINE	TRANS	TRIM	DESCRIPTION
NOTE: ENC=2.5L Diesel Engine DDQ=5 Speed Manual Transmission									
1	52058539	1				ENC	DDQ		ISOLATOR, Transmission Mount
2	06502697	1							NUT, Hex Flange Lock, M12x1.75
3	34202606	1				ENC	DDQ		BOLT, Hex Head
4	34202606	1							BOLT AND CONED WASHER, Hex Head, .437-14x1.12, (NOT SERVICED)

CHEROKEE (XJ)

SERIES	LINE	BODY	ENGINE	TRANSMISSION
L = LOWLINE	T = JEEP - 2WD B = JEEP - 2WD (RHD) J = JEEP - 4WD U = JEEP - 4WD (RHD)	72 = SPORT UTILITY 2-DR 74 = SPORT UTILITY 4-DR	ENC = 2.5L 4 Cyl Turbo Diesel Engine EPB = 2.5L 4 Cylinder Engine EPE = Engine - 2.5L Power Tech I-4 Cyl. ERH = 4.0L Power Tech I-6 Engine	DDQ = 5-Speed Manual Transmission DGS = 4-Speed Automatic AW4 Transmission DGO = ALL AUTOMATIC TRANSMISSIONS DBB = ALL MANUAL TRANSMISSIONS

Engine Mounting, Front
Figure 9-150

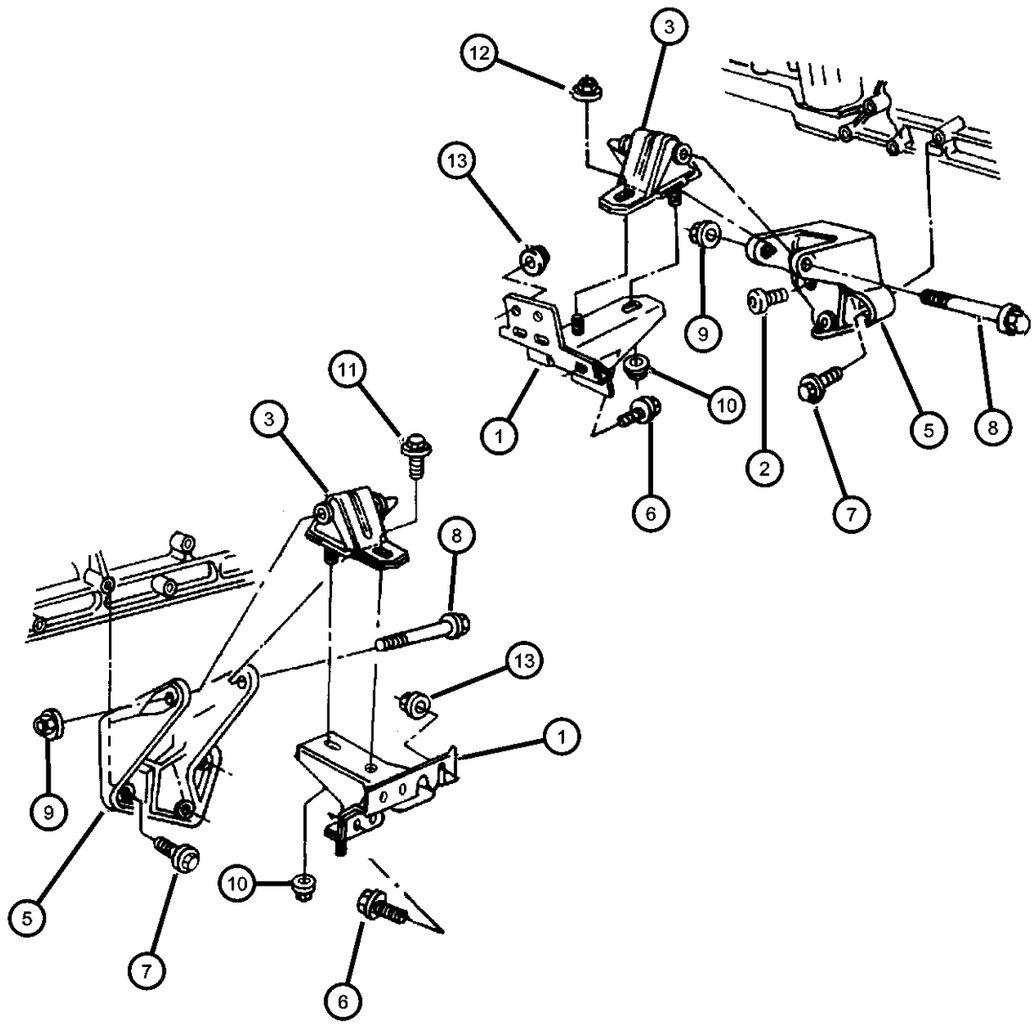

ITEM	PART NUMBER	QTY	LINE	SERIES	BODY	ENGINE	TRANS	TRIM	DESCRIPTION
NOTE: ER0=All 4.0L Engines									
1									BRACKET, Engine Mount
	52002603AB	1				ER0			Left
	52019010AB	1	J, T			ER0			
	52058424	1	B			ER0			Right
2	J4007560	1				ER0			SCREW, Hex Head, .375-16x1.125
3									CUSHION, Engine Support
	52019201AB	2	J, T			ER0			
		1	B, U			ER0			
-4	52020018	1	B			ER0			INSULATOR, Engine MountRight
5									BRACKET, Engine Mount
	52002607	1				ER0			Left
	52020270	1				ER0			Right
6	06504511	1				ER0			SCREW AND WASHER, M10x1.5x40
7	06034989	5				EP0			SCREW, Hex Head, .375-16x1.125
8	34202606	2				ER0			BOLT, Hex Head
9	06502697	4							NUT, Hex Flange Lock, M12x1.75
10	34201828	2				ER0			NUT, M10x1.50
11	06504511	1				ER0			SCREW AND WASHER, M10x1.5x40
12	06502135	1	J, T			ER0			NUT, Hex Flange, M10x1.5
13	34201416	3				ER0			NUT, Hex Flange, M8x1.25

CHEROKEE (XJ)

SERIES	LINE	BODY	ENGINE	TRANSMISSION
L = LOWLINE	T = JEEP - 2WD B = JEEP - 2WD (RHD) J = JEEP - 4WD U = JEEP - 4WD (RHD)	72 = SPORT UTILITY 2-DR 74 = SPORT UTILITY 4-DR	ENC = 2.5L 4 Cyl Turbo Diesel Engine EPB = 2.5L 4 Cylinder Engine EPE = Engine - 2.5L Power Tech I-4 Cyl. ERH = 4.0L Power Tech I-6 Engine	DDQ = 5-Speed Manual Transmission DGS = 4-Speed Automatic AW4 Transmission DGO = ALL AUTOMATIC TRANSMISSIONS DBB = ALL MANUAL TRANSMISSIONS

Engine Mounting, Rear
Figure 9-160

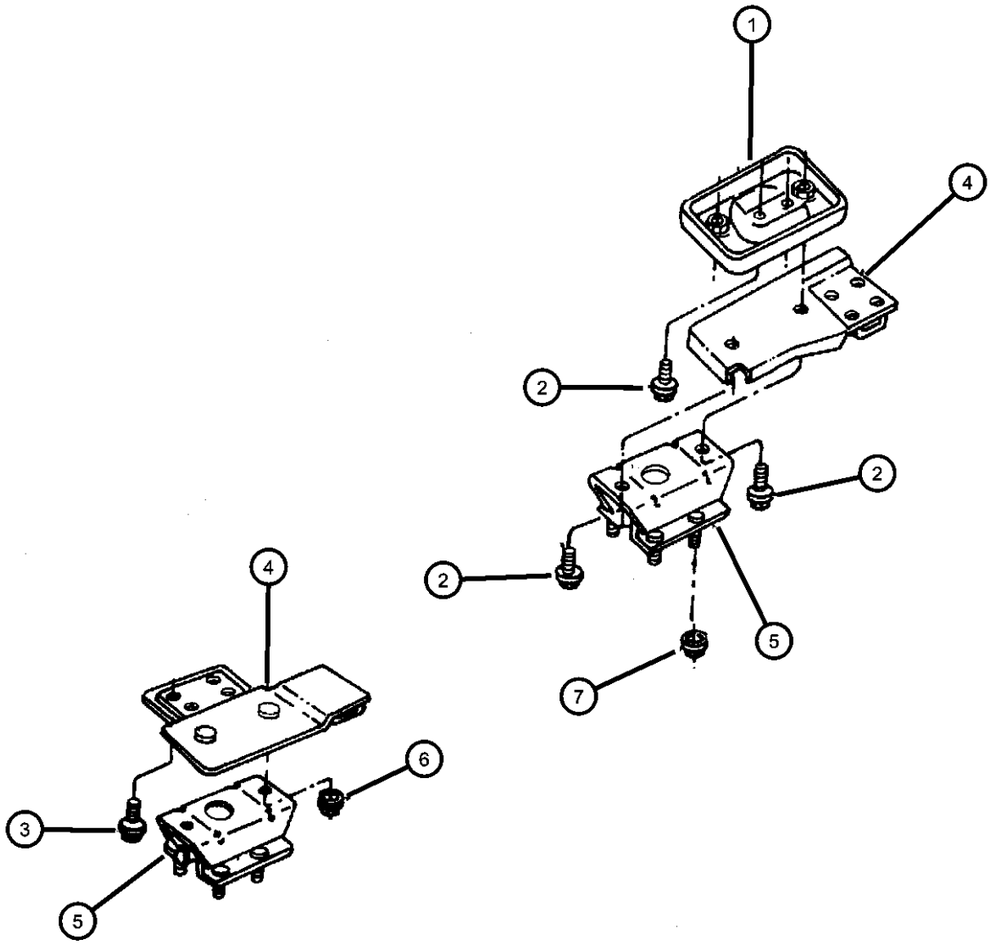

ITEM	PART NUMBER	QTY	LINE	SERIES	BODY	ENGINE	TRANS	TRIM	DESCRIPTION
NOTE: ER0=All 4.0L Engines DBB=All Manual Transmissions DDQ=5 Speed Manual Transmission DG0=All Automatic Transmissions									
1	52002337	1	B			ER0	DG0		BRACKET, Engine Mount
2	52017887	2	B			ER0	DG0		BOLT, Hex Flange Head, M12x1.75x25
3	J4007162	4				ER0	DBB		BOLT, Hex Head, .437-14x1.25
4									BRACKET, Transmission Mount
	52058882	1				ER0	DG0		
	52058883	1				ER0	DDQ		
5	52002334	1				ER0			ISOLATOR, Transmission Mount
6	06502697	2							NUT, Hex Flange Lock, M12x1.75
7	11502811	4							NUT, Hex Flange Lock, M8x1.25

CHEROKEE (XJ)

SERIES	LINE	BODY	ENGINE	TRANSMISSION
L = LOWLINE	T = JEEP - 2WD B = JEEP - 2WD (RHD) J = JEEP - 4WD U = JEEP - 4WD (RHD)	72 = SPORT UTILITY 2-DR 74 = SPORT UTILITY 4-DR	ENC = 2.5L 4 Cyl Turbo Diesel Engine EPB = 2.5L 4 Cylinder Engine EPE = Engine - 2.5L Power Tech I-4 Cyl. ERH = 4.0L Power Tech I-6 Engine	DDQ = 5-Speed Manual Transmission DGS = 4-Speed Automatic AW4 Transmission DGO = ALL AUTOMATIC TRANSMISSIONS DBB = ALL MANUAL TRANSMISSIONS

Group - 2.5L4

Engine 2.5L Four Cylinder

2.5L4-200
Cylinder Head

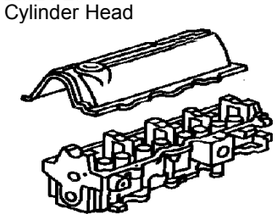

2.5L4-300
Cylinder Block

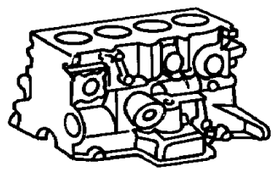

2.5L4-400
Crankshaft, Piston and Drive Plate

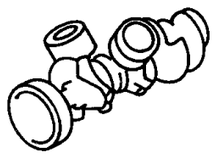

2.5L4-500
Camshafts & Valves

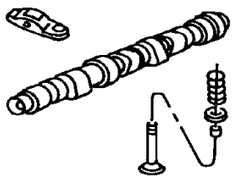

2.5L4-600
Timing Belt and Cover

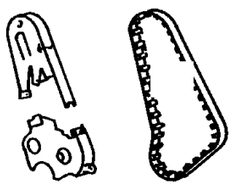

2.5L4-700
Engine Oiling

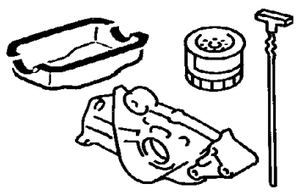

2.5L4-800
Manifolds

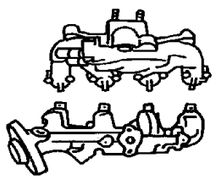

2.5L4-900
Crankcase Ventilation

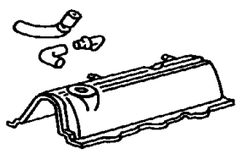

Group - 2.5L4 Engine 2.5L Four Cylinder

Illustration Title — Group-Fig. No.

Cylinder Head
Cylinder Head ..... Fig. 2.5L4 - 210

Cylinder Block
Cylinder Block ..... Fig. 2.5L4 - 310

Crankshaft, Piston and Drive Plate
Crankshaft, Piston and Torque Converter ..... Fig. 2.5L4 - 410

Camshafts & Valves
Camshaft and Valves ..... Fig. 2.5L4 - 510

Timing Belt and Cover
Timing Cover ..... Fig. 2.5L4 - 610

Engine Oiling
Engine Oiling ..... Fig. 2.5L4 - 710

Manifolds
Manifold, Intake and Exhaust ..... Fig. 2.5L4 - 810

Crankcase Ventilation
Crankcase Ventilation ..... Fig. 2.5L4 - 910

Cylinder Head
Figure 2.5L4-210

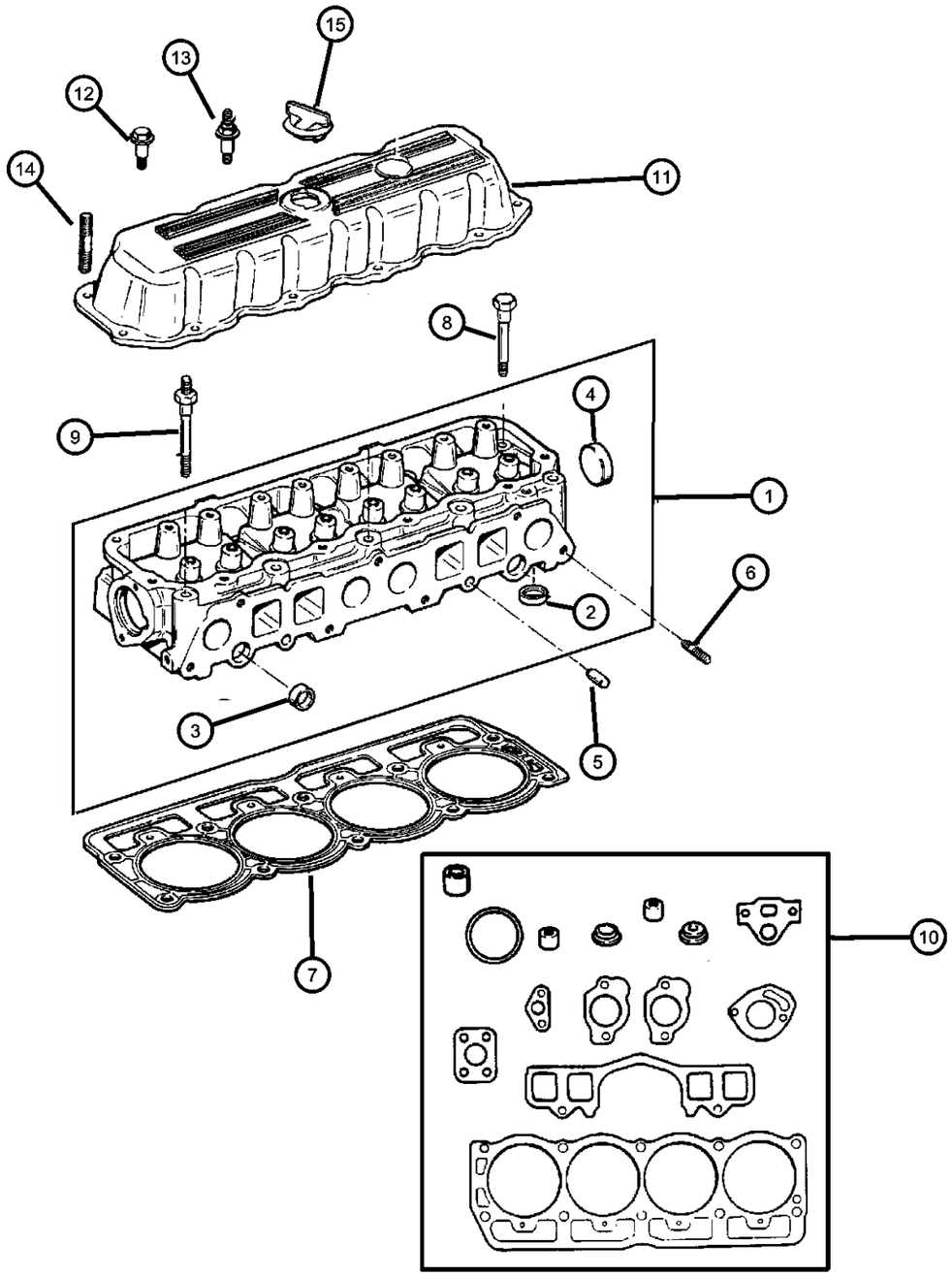

ITEM	PART NUMBER	QTY	LINE	SERIES	BODY	ENGINE	TRANS	TRIM	DESCRIPTION
NOTE: EP0=All 2.5L Gas Engines									
1	33007115	1				EP0			HEAD, Cylinder
2	33007142	4				EP0			SEAT, Exhaust Valve
3	J3172319	4				EP0			PLUG, Cylinder Block Oil Hole
4	J3105394	1				EP0			PLUG, Cylinder Block Oil Hole
5	J3172318	2				EP0, ER0			DOWEL, Cylinder Head To Intake
6	53010165	2				EP0, ER0			STUD, .375-16/.375-24x1.75
7	53009549	1				EP0			GASKET, Cylinder Head
8	06035514	5				EP0			BOLT, Cylinder Head
9	06035516	5				EP0			STUD, Double Ended, .50-13/.437-14x6.00
10	04798992	1				EP0			GASKET PACKAGE, Engine
11	53010428	1				EP0			COVER, Cylinder Head
12	06034478	1				EP0			BOLT, Hex Flange Head, .250-20x1.00
13	06034477	9				EP0			BOLT, Hex Flange Pilot Point, .250-20x1.97
14	06034477	9				EP0			STUD, .250-20x2.00
15	53020555	1				EP0			CAP, Oil Filler

CHEROKEE (XJ)

SERIES	LINE	BODY	ENGINE	TRANSMISSION
L = LOWLINE	T = JEEP - 2WD B = JEEP - 2WD (RHD) J = JEEP - 4WD U = JEEP - 4WD (RHD)	72 = SPORT UTILITY 2-DR 74 = SPORT UTILITY 4-DR	ENC = 2.5L 4 Cyl Turbo Diesel Engine EPB = 2.5L 4 Cylinder Engine EPE = Engine - 2.5L Power Tech I-4 Cyl. ERH = 4.0L Power Tech I-6 Engine	DDQ = 5-Speed Manual Transmission DGS = 4-Speed Automatic AW4 Transmission DGO = ALL AUTOMATIC TRANSMISSIONS DBB = ALL MANUAL TRANSMISSIONS

Cylinder Block
Figure 2.5L4-310

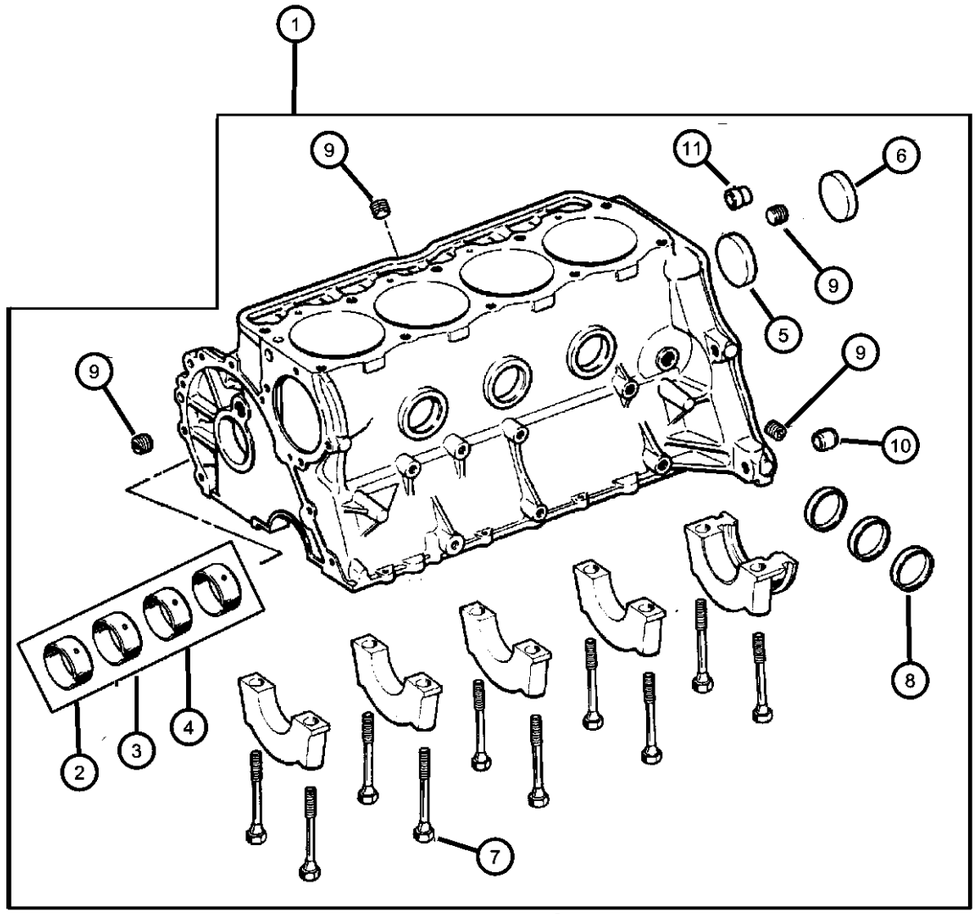

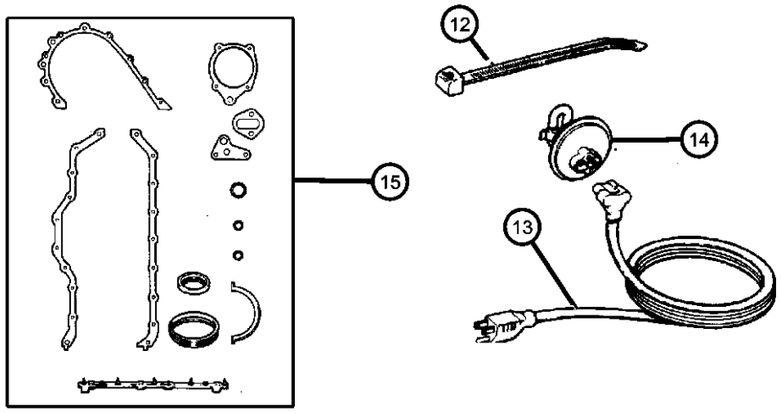

ITEM	PART NUMBER	QTY	LINE	SERIES	BODY	ENGINE	TRANS	TRIM	DESCRIPTION
NOTE: EP0=All 2.5L Gas Engines									
1	04856744	1				EP0			BLOCK, Short
2	J3205711	1				EP0			BEARING KIT, Camshaft, Standard
3	J3205711	1							BEARING PACKAGE, Camshaft, Standard Size, (NOT REQUIRED)
4	J3208985	1				EP0			BEARING KIT, Camshaft, .010 Oversize
5	J3172313	1				EP0			PLUG, Camshaft
6	53020465	1				EP0			PLUG, Cylinder Block
7	J4006948	10				EP0			BOLT, Hex Head, .50-13x2.97
8	J4006580	3				EP0			PLUG, Cylinder Block Oil Hole
9	06034166	3				EP0			PLUG, Cylinder Block Oil Hole
10	J4006953	1				EP0			DOWEL, Block To Cylinder Head
11	J3241332	1				EP0			DOWEL, Clutch Housing To Block
12									STRAP, Retaining
	J3693058	1	J						
		1	U						
13	53000878	1				EP0			CORD, Engine Block Heater
14	56026888	1				EP0			HEATER, Engine Block
15	04713023	1				EP0			GASKET PACKAGE, Engine

CHEROKEE (XJ)

SERIES	LINE	BODY	ENGINE	TRANSMISSION
L = LOWLINE	T = JEEP - 2WD B = JEEP - 2WD (RHD) J = JEEP - 4WD U = JEEP - 4WD (RHD)	72 = SPORT UTILITY 2-DR 74 = SPORT UTILITY 4-DR	ENC = 2.5L 4 Cyl Turbo Diesel Engine EPB = 2.5L 4 Cylinder Engine EPE = Engine - 2.5L Power Tech I-4 Cyl. ERH = 4.0L Power Tech I-6 Engine	DDQ = 5-Speed Manual Transmission DGS = 4-Speed Automatic AW4 Transmission DGO = ALL AUTOMATIC TRANSMISSIONS DBB = ALL MANUAL TRANSMISSIONS

Crankshaft, Piston and Torque Converter
Figure 2.5L4-410

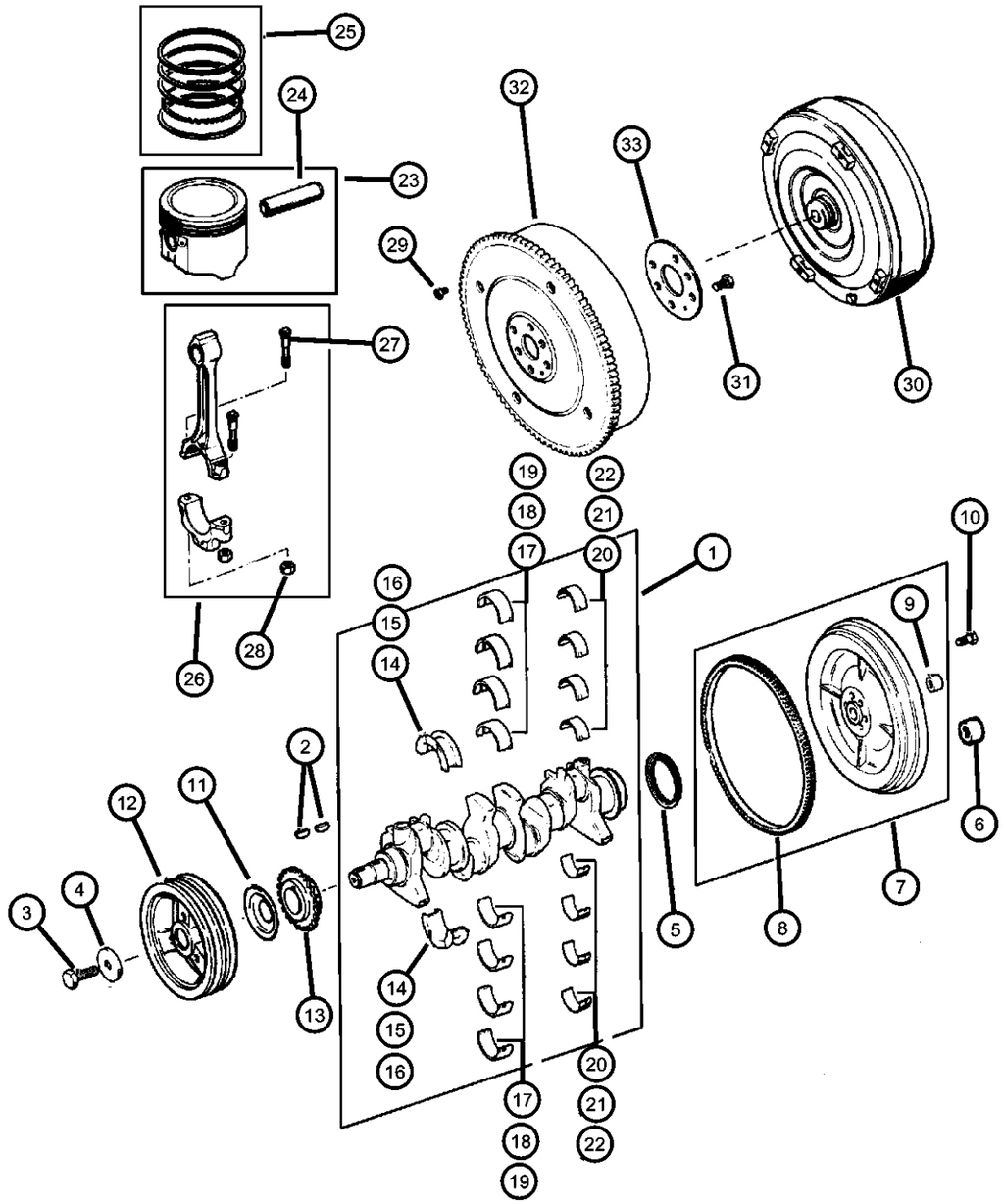

ITEM	PART NUMBER	QTY	LINE	SERIES	BODY	ENGINE	TRANS	TRIM	DESCRIPTION
NOTE: EP0=All 2.5L Gas Engines DBB=All Manual Transmissions DG0=All Automatic Transmissions									
1	04713051	1				EP0			CRANKSHAFT
2	06034749	1				EP0, ER0			KEY, Crankshaft Sprocket
3	06029736	1				EP0, ER0			BOLT
4	J3230155	1				EP0, ER0			WASHER, Plain
5	33004143	1				EP0			SEAL, Rear Main Crankshaft
6	52117830	1				EP0	DG0		ADAPTER, Torque Converter
7	53020578	1				EP0	DBB		FLYWHEEL
8	J3241718	1				EP0	DBB		GEAR, Ring
9	J3250005	1				EP0	DBB		BEARING, Pilot
10	J4007123	6				EP0	DBB		BOLT, Flywheel
11	J3173076	1				EP0, ER0			SLINGER, Oil
12	33002879	1				EP0			DAMPER, Crankshaft
13	33004020	1				EP0			GEAR, Crankshaft
14	83507084	1				EP0, ER0			BEARING PACKAGE, Crankshaft Thrust, Standard Size
15	83507086	AR				EP0, ER0			BEARING PACKAGE, Crankshaft Thrust, .001" Undersize
16	83507090	AR				EP0, ER0			BEARING PACKAGE, Crankshaft Thrust, .010" Undersize
17	83507079	4				EP0			BEARING PACKAGE, Crankshaft, Standard
18	83507080	AR				EP0, ER0			BEARING PACKAGE, Crankshaft, .001 Undersize
19	83507083	AR				EP0, ER0			BEARING PACKAGE, Crankshaft, .010 Undersize
20	83500300	8				EP0			BEARING KIT, Connecting Rod, Standard
21	83501397	AR				EP0, ER0			BEARING KIT, Connecting Rod, .001 Undersize
22	83500301	AR				EP0, ER0			BEARING KIT, Connecting Rod, .010 Undersize
23									PISTON PIN AND ROD
	04798329	AR				EP0			B Size, 3.8742
	04798330	AR				EP0			C Size, 3.8746
	04798331	AR				EP0			D Size, 3.8750
	04798332	AR				EP0			E Size, 3.8754
	04798333	AR				EP0			F Size, 3.8758

CHEROKEE (XJ)

SERIES	LINE	BODY	ENGINE	TRANSMISSION
L = LOWLINE	T = JEEP - 2WD B = JEEP - 2WD (RHD) J = JEEP - 4WD U = JEEP - 4WD (RHD)	72 = SPORT UTILITY 2-DR 74 = SPORT UTILITY 4-DR	ENC = 2.5L 4 Cyl Turbo Diesel Engine EPB = 2.5L 4 Cylinder Engine EPE = Engine - 2.5L Power Tech I-4 Cyl. ERH = 4.0L Power Tech I-6 Engine	DDQ = 5-Speed Manual Transmission DGS = 4-Speed Automatic AW4 Transmission DGO = ALL AUTOMATIC TRANSMISSIONS DBB = ALL MANUAL TRANSMISSIONS

AR = use ase required - = Non illustrrated part

Crankshaft, Piston and Torque Converter
Figure 2.5L4-410

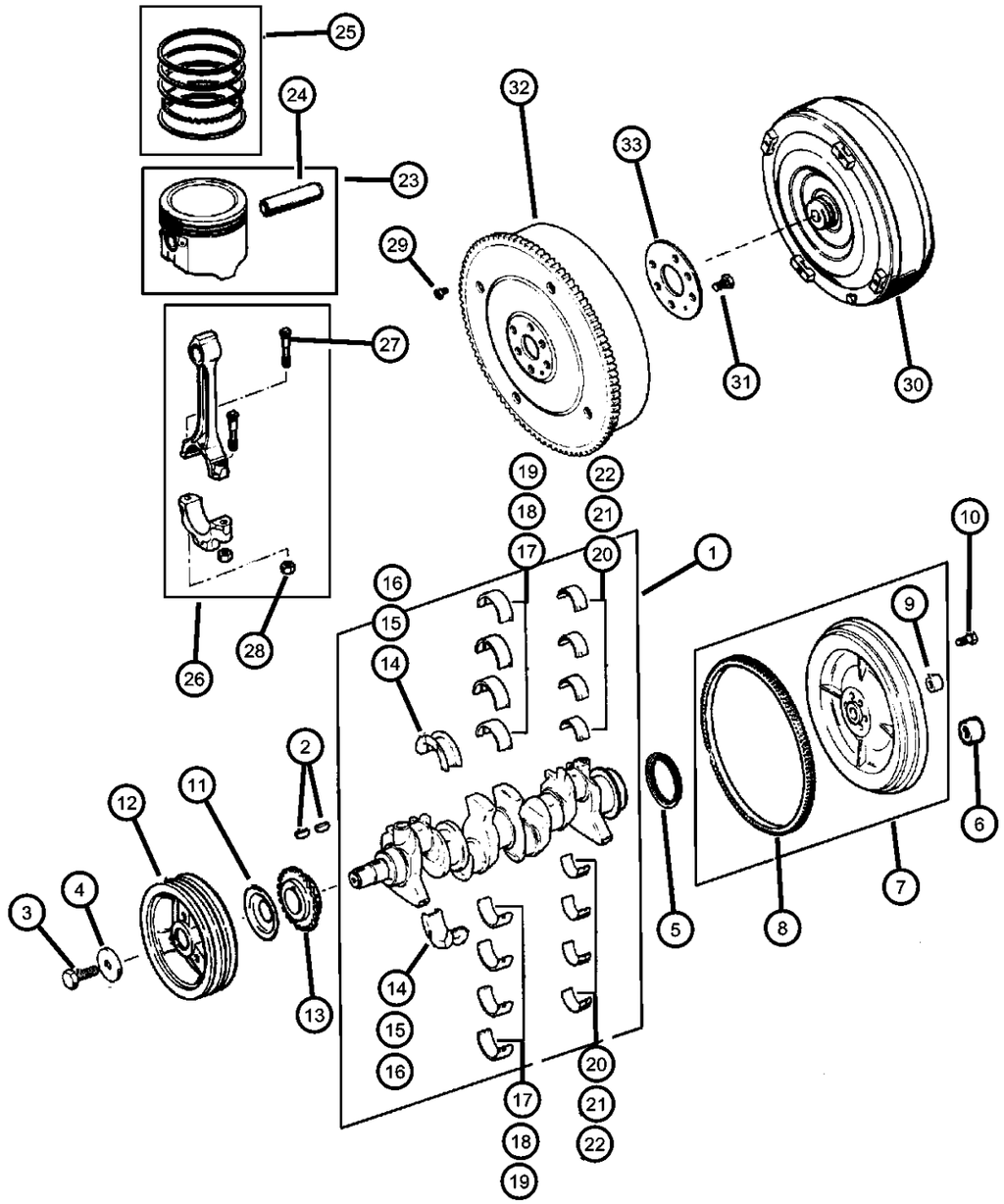

ITEM	PART NUMBER	QTY	LINE	SERIES	BODY	ENGINE	TRANS	TRIM	DESCRIPTION
24	04798333	AR							PIN, Piston, Serviced in Piston Assembly, (NOT SERVICED),
25									RING PACKAGE, Piston, Standard Size Complete Engine
	04798324	1				EP0	DBB		
		1				EP0	DG0		
26		1							ROD, Connecting, Serviced in Piston Assembly, (NOT SERVICED)
27	53020123	8				EP0			BOLT, Connecting Rod
28	J4006385	8				EP0			NUT, Hex Flange, .3437-24
29	06501099	4				EP0	DGD		BOLT, Hex Head, M10x1.50 x 13.20
30	04736388	1				EP0	DGD		CONVERTER, Torque
31	06034780	6				EP0	DG0		BOLT, Hex Head, .437-24x1.20
32	52104139	1				EP0	DG0		PLATE, Torque Converter Drive
33	52117830	1				EP0	DG0		ADAPTER, Torque Converter

CHEROKEE (XJ)

SERIES	LINE	BODY	ENGINE	TRANSMISSION
L = LOWLINE	T = JEEP - 2WD B = JEEP - 2WD (RHD) J = JEEP - 4WD U = JEEP - 4WD (RHD)	72 = SPORT UTILITY 2-DR 74 = SPORT UTILITY 4-DR	ENC = 2.5L 4 Cyl Turbo Diesel Engine EPB = 2.5L 4 Cylinder Engine EPE = Engine - 2.5L Power Tech I-4 Cyl. ERH = 4.0L Power Tech I-6 Engine	DDQ = 5-Speed Manual Transmission DGS = 4-Speed Automatic AW4 Transmission DGO = ALL AUTOMATIC TRANSMISSIONS DBB = ALL MANUAL TRANSMISSIONS

AR = use ase required - = Non illustrrated part

Camshaft and Valves
Figure 2.5L4-510

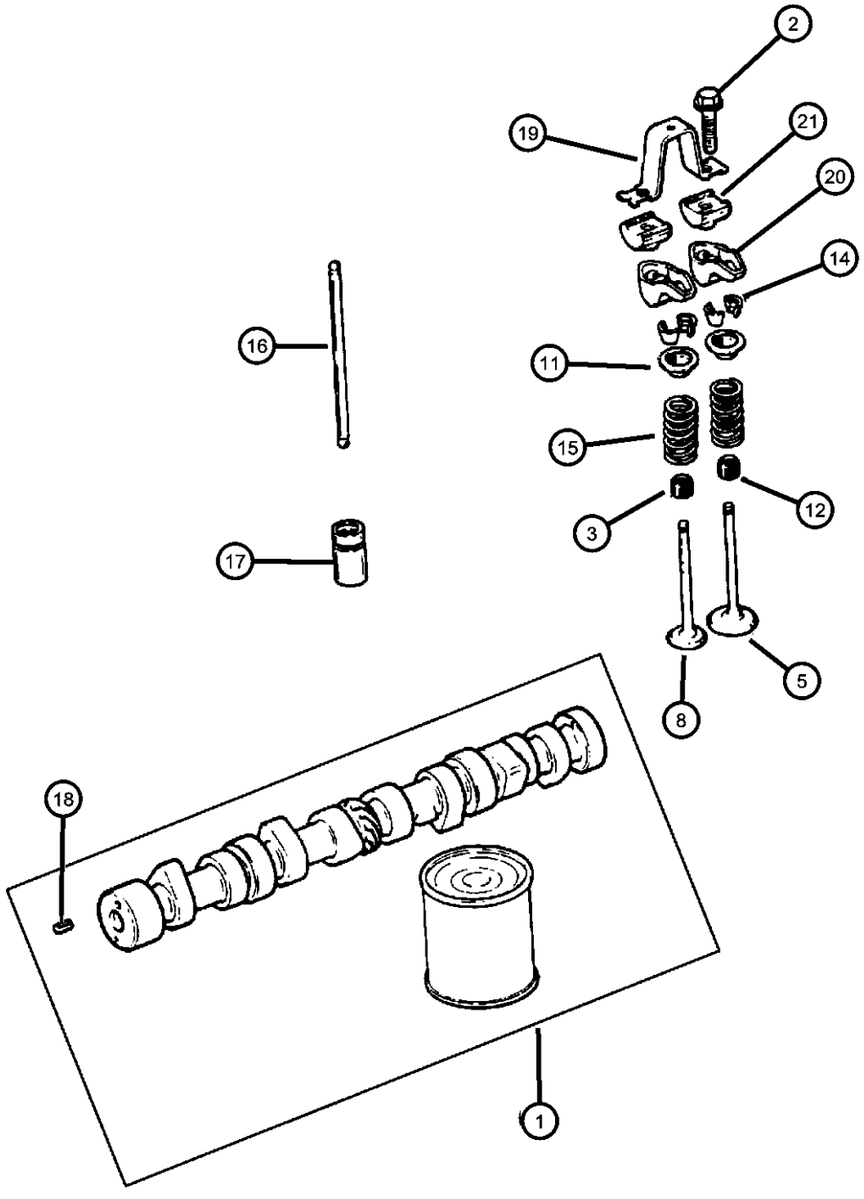

ITEM	PART NUMBER	QTY	LINE	SERIES	BODY	ENGINE	TRANS	TRIM	DESCRIPTION
NOTE: EP0=All 2.5L Gas Engines									
1	53020497	1				EP0			CAMSHAFT, Engine
2	J9425708	8				EP0			BOLT, Hex Flange Head, .312-18x1.25
3	53009887	4				EP0			SEAL, Valve Guide, Standard
-4	33002733	AR				EP0, ER0			SEAL, Valve Guide, .015" Oversize
5	33003515	4				EP0			VALVE, Intake, Standard, Standard
-6	33003519	AR				EP0, ER0			VALVE, Intake, .003" O/S
-7	33003575	AR				EP0, ER0			VALVE, Intake, .015" O/S
8	04637537	4				EP0			VALVE, Exhaust, Standard, Standard
-9	04637538	AR				EP0, ER0			VALVE, Exhaust, .003" O/S
-10	04637539	AR				EP0, ER0			VALVE, Exhaust, .015 Oversize
11	33004626	8				EP0			RETAINER, Valve Spring
12	53009886	4				EP0			SEAL, Valve Guide
-13	33003016	AR				EP0, ER0			SEAL, Valve Guide, .015" Oversize
14	33003521	16				EP0			LOCK, Valve Spring Retainer
15	53020556	8				EP0			SPRING, Valve
16	J3241709	8				EP0			PUSH ROD, FRONT SUSPENSION
17	04740269	8				EP0			TAPPET, Valve
18	J0456384	1				EP0			DOWEL, Camshaft Sprocket
19	J3236513	4				EP0			BRIDGE, Rocker Arm
20	04778743	8				EP0			ROCKER ARM, Valve
21	J3235090	8				EP0			PIVOT, Rocker Arm

CHEROKEE (XJ)

SERIES	LINE	BODY	ENGINE	TRANSMISSION
L = LOWLINE	T = JEEP - 2WD B = JEEP - 2WD (RHD) J = JEEP - 4WD U = JEEP - 4WD (RHD)	72 = SPORT UTILITY 2-DR 74 = SPORT UTILITY 4-DR	ENC = 2.5L 4 Cyl Turbo Diesel Engine EPB = 2.5L 4 Cylinder Engine EPE = Engine - 2.5L Power Tech I-4 Cyl. ERH = 4.0L Power Tech I-6 Engine	DDQ = 5-Speed Manual Transmission DGS = 4-Speed Automatic AW4 Transmission DGO = ALL AUTOMATIC TRANSMISSIONS DBB = ALL MANUAL TRANSMISSIONS

AR = use ase required - = Non illustrrated part

Timing Cover
Figure 2.5L4-610

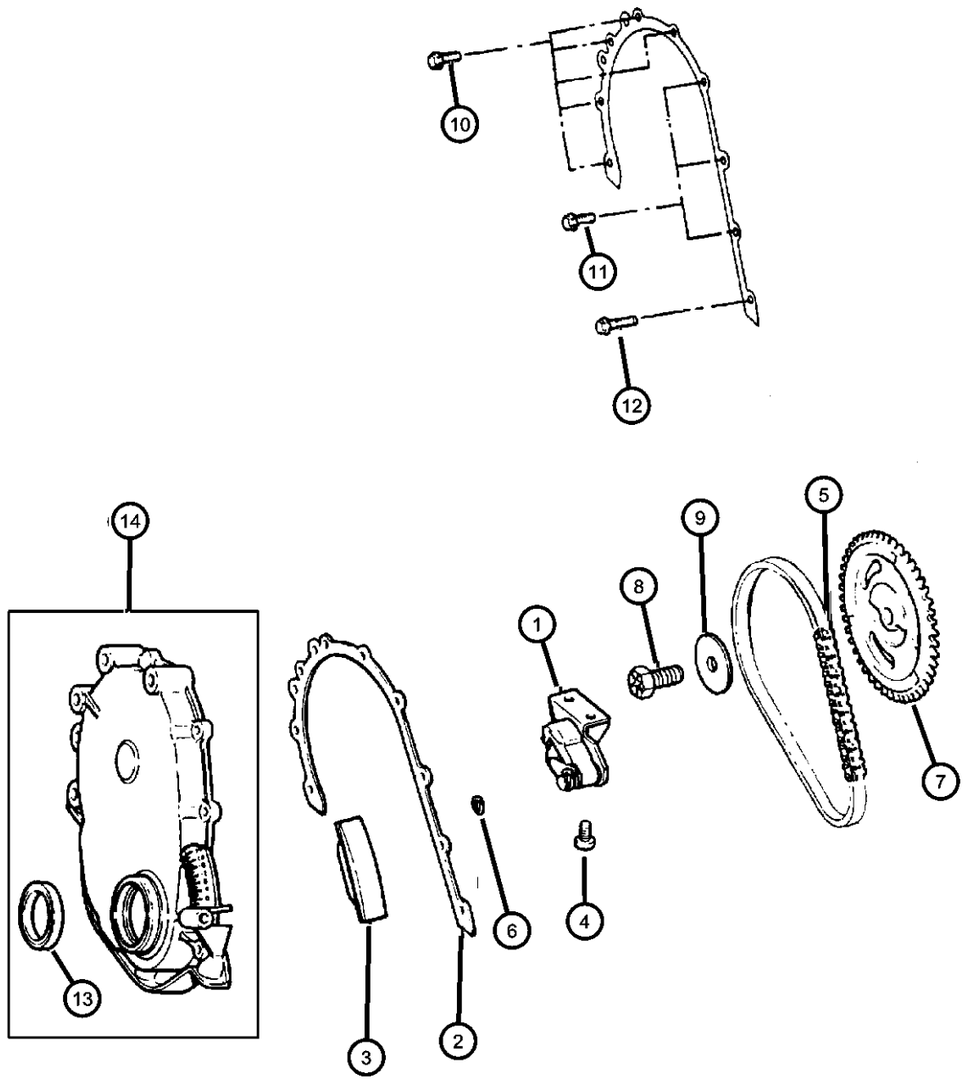

ITEM	PART NUMBER	QTY	LINE	SERIES	BODY	ENGINE	TRANS	TRIM	DESCRIPTION
NOTE: EP0=All 2.5L Gas Engines									
1	33003421	1				EP0			TENSIONER, Belt
2	53020487	1				EP0, ER0			GASKET, Front Cover
3	33003446	1				EP0, ER0			SNUBBER, Timing Chain
4	J4006708	2				EP0			SCREW, Pan Head, .312-18x.56
5	J3242300	1				EP0			CHAIN, Timing
6	J3242300	1							CLIP, Serviced in Tensioner Assembly, (NOT SERVICED)
7	J3242280	1				EP0			GEAR, Camshaft
8	J3243156	1				EP0			BOLT, Hex Flange Head, .50-20x1.38
9	J3173284	1				EP0, ER0			WASHER, Flat, .206 Diameter
10	J4006906	5				EP0, ER0			BOLT, Hex
11	06034604	2				EP0			SCREW
12	06034914	1				EP0, ER0			SCREW
13	33004681	1				EP0, ER0			SEAL, Front Main Crankshaft
14	53020222	1				EP0, ER0			COVER, Timing Belt

CHEROKEE (XJ)

SERIES	LINE	BODY	ENGINE	TRANSMISSION
L = LOWLINE	T = JEEP - 2WD B = JEEP - 2WD (RHD) J = JEEP - 4WD U = JEEP - 4WD (RHD)	72 = SPORT UTILITY 2-DR 74 = SPORT UTILITY 4-DR	ENC = 2.5L 4 Cyl Turbo Diesel Engine EPB = 2.5L 4 Cylinder Engine EPE = Engine - 2.5L Power Tech I-4 Cyl. ERH = 4.0L Power Tech I-6 Engine	DDQ = 5-Speed Manual Transmission DGS = 4-Speed Automatic AW4 Transmission DGO = ALL AUTOMATIC TRANSMISSIONS DBB = ALL MANUAL TRANSMISSIONS

Engine Oiling
Figure 2.5L4-710

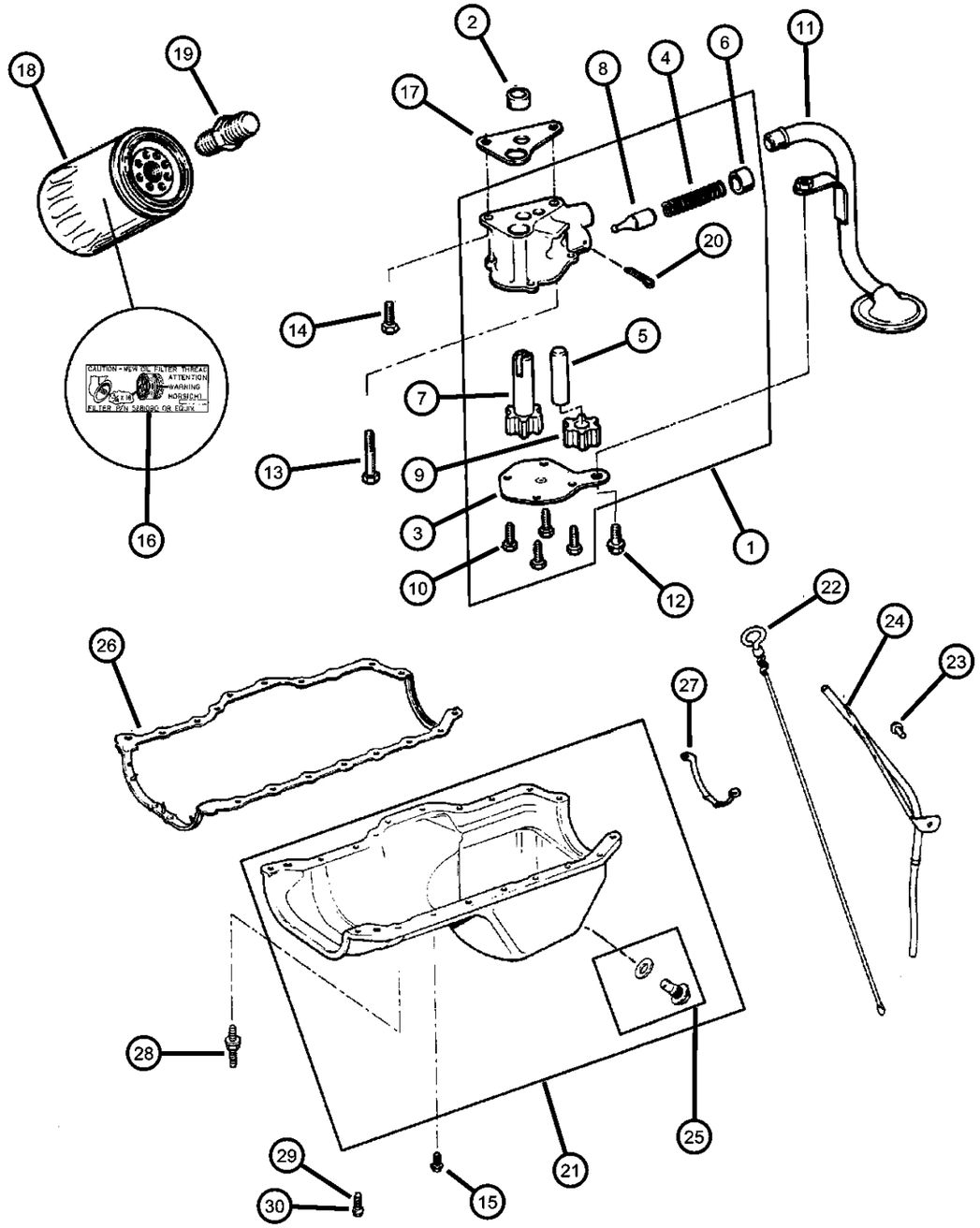

ITEM	PART NUMBER	QTY	LINE	SERIES	BODY	ENGINE	TRANS	TRIM	DESCRIPTION
NOTE: All 2.5L Gas Engines									
1	J3241399	1				EP0			PUMP, Engine Oil
2	J4005149	1				EP0, ER0			DOWEL, Oil Pump
3	J3241733	1				EP0			COVER, Engine Oil Pump
4	J3239668	1				EP0			SPRING, Oil Pressure Relief Valve
5	J3171956	1				EP0			SHAFT, Oil Pump
6	J3171958	1				EP0			RETAINER, Oil Release Valve
7	J3172334	1				EP0			GEAR, Oil Pump
8	J3188661	1				EP0			PLUNGER, Oil Pressure Relief Valve
9	J3196843	1				EP0			GEAR, Oil Pump Driven
10	J9416852	4				EP0			SCREW, Hex Flange Head, .25-20x.50
11	53020564	1				EP0			TUBE, Oil Pump Inlet
12	J9419683	1				EP0			BOLT, Hex Flange Head, .312-18x.625
13	00154593	1				EP0, ER0			SCREW, Hex Head Coned, .312-18x2.625
14	06022235	1				EP0, ER0			BOLT AND WASHER, Hex Head, .312-18x1.00
15	06034732	13				EP0			SCREW AND WASHER, Hex Head, .25-20x.545
16	53008907	1							LABEL, Oil Filter Thread I.D.
17	J3172332	1				EP0, ER0			GASKET, Oil Pump
18	05281090	1				EP0, ER0			FILTER, Engine Oil
19	53007563	1				EP0			CONNECTOR, Oil Filter
20	J0271448	1				EP0			PIN, Roll, 5/32" x 1.00"
21	53020560	1				EP0			PAN, Engine Oil
22	53010444	1				EP0			INDICATOR, Engine Oil Level
23	06035664	1				EP0, ER0			STUD, .312-18x1.560
24	53010343	1				EP0			TUBE, Oil Filler
25	06035417	1				EP0			PLUG, Oil Drain
26	53007567	1				EP0			GASKET, Oil Pan
27	J3243116	1				EP0			SUPPORT, Engine Oil Pan
28	06034734	6				EP0			BOLT, Double Stud Hex, .250-20x1.437 & .250-20 x.700

CHEROKEE (XJ)

SERIES	LINE	BODY	ENGINE	TRANSMISSION
L = LOWLINE	T = JEEP - 2WD B = JEEP - 2WD (RHD) J = JEEP - 4WD U = JEEP - 4WD (RHD)	72 = SPORT UTILITY 2-DR 74 = SPORT UTILITY 4-DR	ENC = 2.5L 4 Cyl Turbo Diesel Engine EPB = 2.5L 4 Cylinder Engine EPE = Engine - 2.5L Power Tech I-4 Cyl. ERH = 4.0L Power Tech I-6 Engine	DDQ = 5-Speed Manual Transmission DGS = 4-Speed Automatic AW4 Transmission DGO = ALL AUTOMATIC TRANSMISSIONS DBB = ALL MANUAL TRANSMISSIONS

Engine Oiling
Figure 2.5L4-710

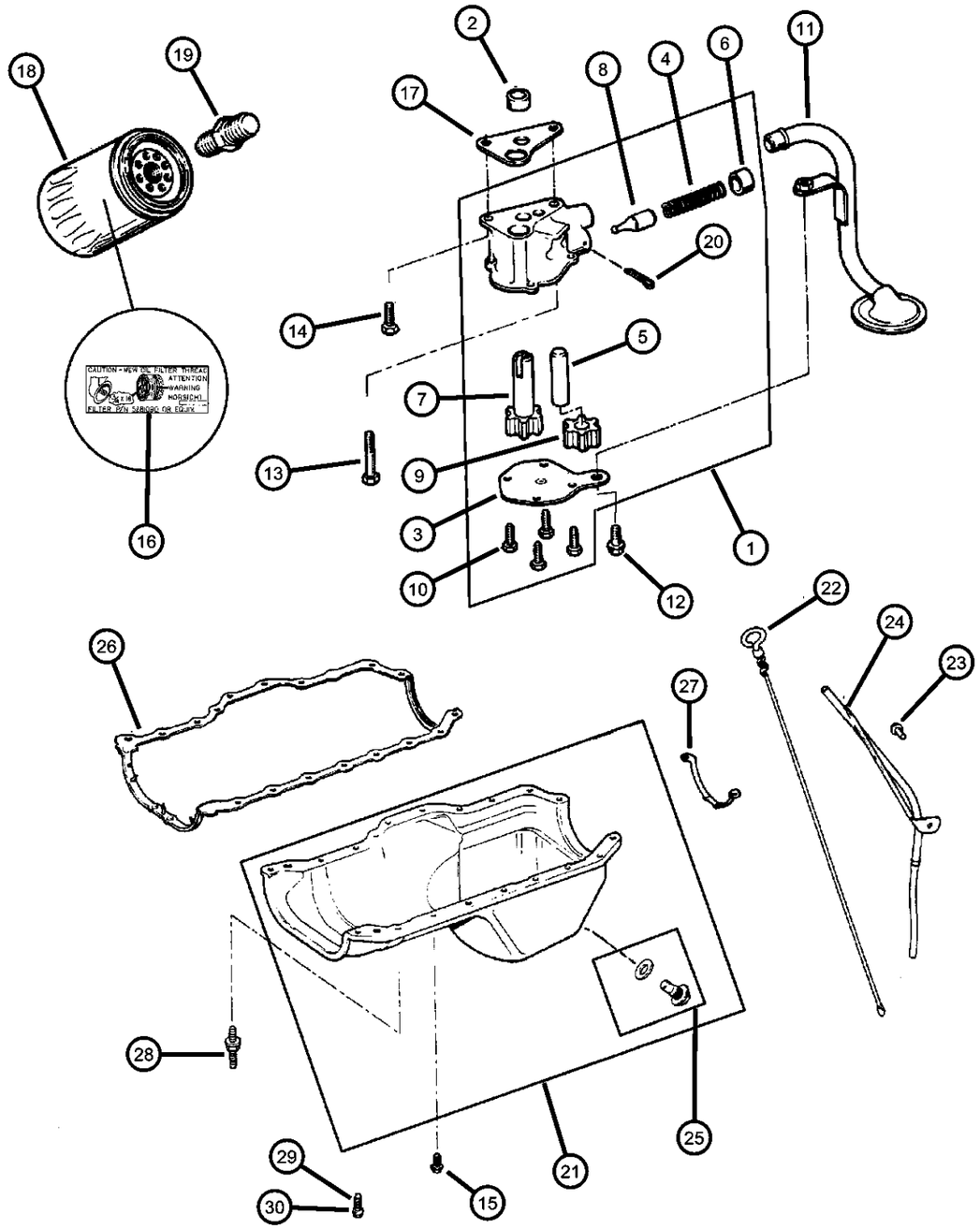

ITEM	PART NUMBER	QTY	LINE	SERIES	BODY	ENGINE	TRANS	TRIM	DESCRIPTION
29	06034483	3				EP0			SCREW, Hex Head Coned, .312-18x.875
30	06034733	1				EP0			STUD, .312-18/.250-20x1.680

CHEROKEE (XJ)

SERIES	LINE	BODY	ENGINE	TRANSMISSION
L = LOWLINE	T = JEEP - 2WD B = JEEP - 2WD (RHD) J = JEEP - 4WD U = JEEP - 4WD (RHD)	72 = SPORT UTILITY 2-DR 74 = SPORT UTILITY 4-DR	ENC = 2.5L 4 Cyl Turbo Diesel Engine EPB = 2.5L 4 Cylinder Engine EPE = Engine - 2.5L Power Tech I-4 Cyl. ERH = 4.0L Power Tech I-6 Engine	DDQ = 5-Speed Manual Transmission DGS = 4-Speed Automatic AW4 Transmission DGO = ALL AUTOMATIC TRANSMISSIONS DBB = ALL MANUAL TRANSMISSIONS

Manifold, Intake and Exhaust
Figure 2.5L4-810

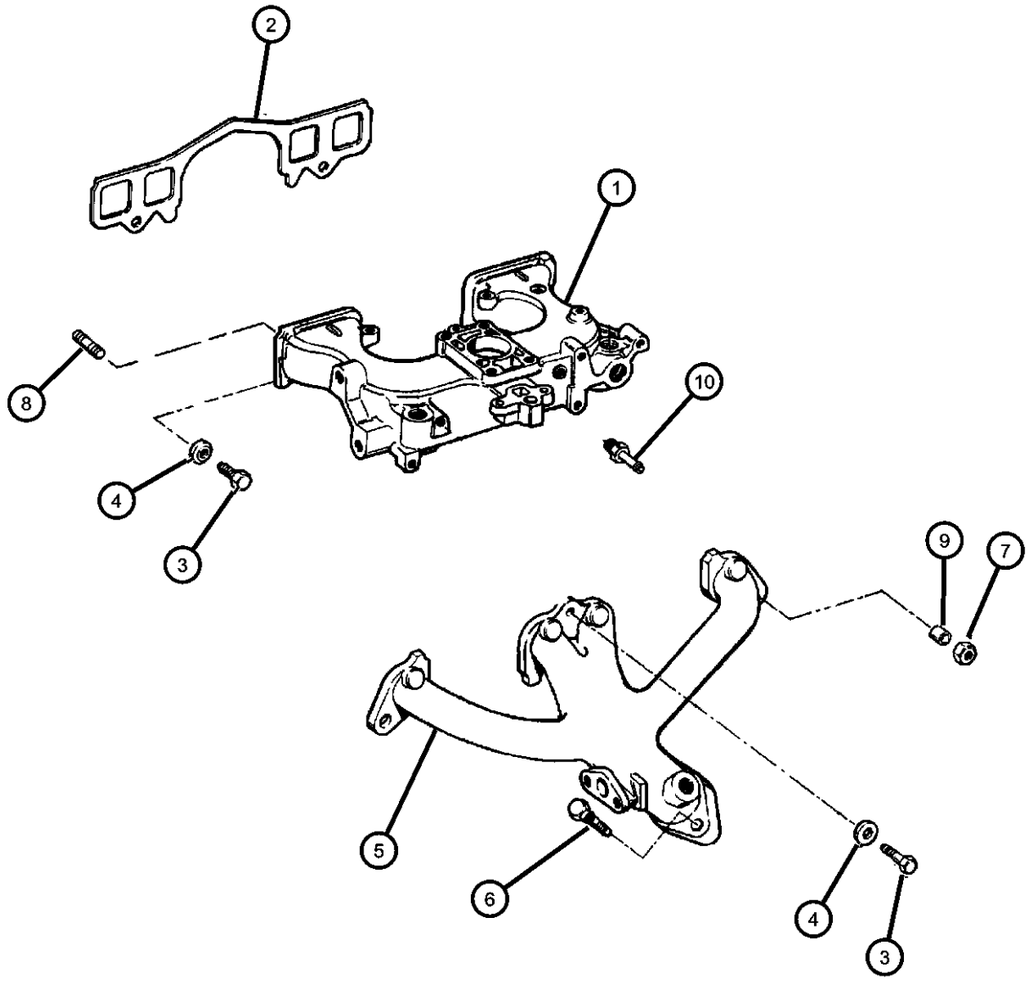

ITEM	PART NUMBER	QTY	LINE	SERIES	BODY	ENGINE	TRANS	TRIM	DESCRIPTION
NOTE: EP0=All 2.5L Gas Engines									
1	53010245	1				EP0			MANIFOLD, Intake
2	53020112	1				EP0			GASKET, Intake Manifold
3	J0186622	4				EP0			BOLT AND RETAINER, Hex Head
4	33004255	7				EP0			WASHER, Manifold Retaining
5	53008860	1				EP0			MANIFOLD, Exhaust
6	J4007109	2				EP0			STUD, .375-16x1.69
7	06034984	2				EP0, ER0			NUT, Hex Flange Lock, .375-24
8	53010165	2				EP0, ER0			STUD, .375-16/.375-24x1.75
9	33003332	2				EP0			SPACER, Exhaust Manifold
10									FITTING, Vacuum
	04854194	1				EP0			Duty Cycle Purge Solenoid
		1				EP0			Power Brake
		1				EP0			Crankcase Ventilation

CHEROKEE (XJ)

SERIES	LINE	BODY	ENGINE	TRANSMISSION
L = LOWLINE	T = JEEP - 2WD B = JEEP - 2WD (RHD) J = JEEP - 4WD U = JEEP - 4WD (RHD)	72 = SPORT UTILITY 2-DR 74 = SPORT UTILITY 4-DR	ENC = 2.5L 4 Cyl Turbo Diesel Engine EPB = 2.5L 4 Cylinder Engine EPE = Engine - 2.5L Power Tech I-4 Cyl. ERH = 4.0L Power Tech I-6 Engine	DDQ = 5-Speed Manual Transmission DGS = 4-Speed Automatic AW4 Transmission DGO = ALL AUTOMATIC TRANSMISSIONS DBB = ALL MANUAL TRANSMISSIONS

Crankcase Ventilation
Figure 2.5L4-910

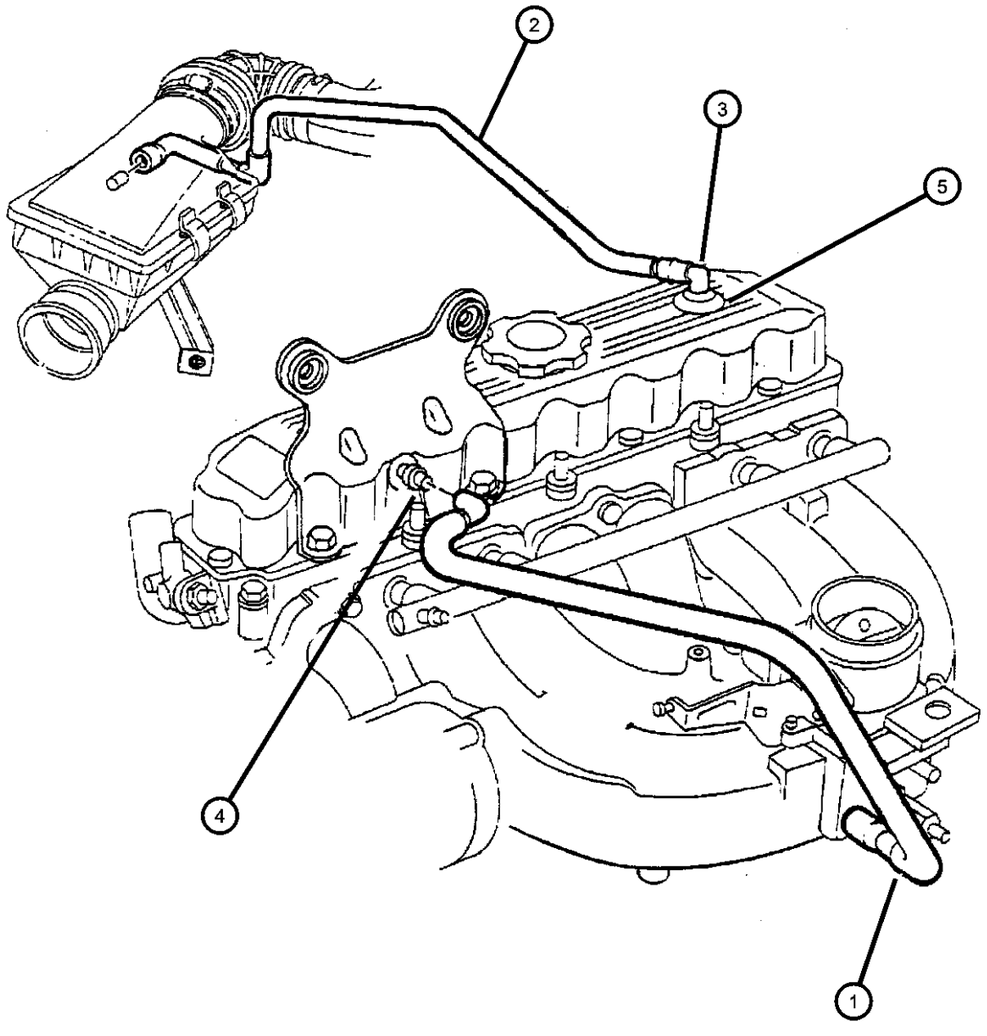

ITEM	PART NUMBER	QTY	LINE	SERIES	BODY	ENGINE	TRANS	TRIM	DESCRIPTION
NOTE: EP0=All 2.5L Gas Engines									
1	04854072	1				EP0			TUBE, Vent
2	04854180	1				ER0			TUBE, Crankcase Vent To Air Cleaner
3	53030497	1				EP0			FITTING, Crankcase Vent Tube
4	33004175	1				EP0			CONNECTOR, Vacuum Hose
5	02946079	1				EP0			GROMMET, Crankcase Vent

CHEROKEE (XJ)

SERIES	LINE	BODY	ENGINE	TRANSMISSION
L = LOWLINE	T = JEEP - 2WD B = JEEP - 2WD (RHD) J = JEEP - 4WD U = JEEP - 4WD (RHD)	72 = SPORT UTILITY 2-DR 74 = SPORT UTILITY 4-DR	ENC = 2.5L 4 Cyl Turbo Diesel Engine EPB = 2.5L 4 Cylinder Engine EPE = Engine - 2.5L Power Tech I-4 Cyl. ERH = 4.0L Power Tech I-6 Engine	DDQ = 5-Speed Manual Transmission DGS = 4-Speed Automatic AW4 Transmission DGO = ALL AUTOMATIC TRANSMISSIONS DBB = ALL MANUAL TRANSMISSIONS

Group - 4.0L

Engine 4.0L Six Cylinder

4.0L-200
Cylinder Head

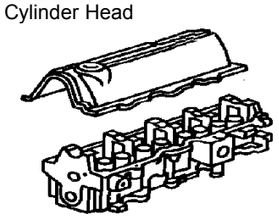

4.0L-300
Cylinder Block

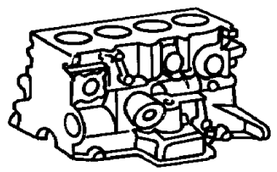

4.0L-400
Crankshaft, Piston and Torque Converter

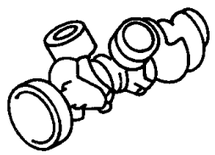

4.0L-500
Camshafts & Valves

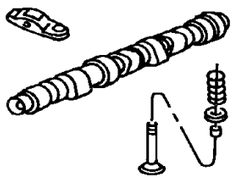

4.0L-600
Timing Belt and Cover

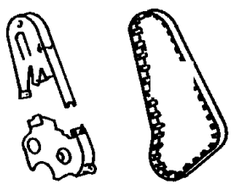

4.0L-700
Engine Oiling

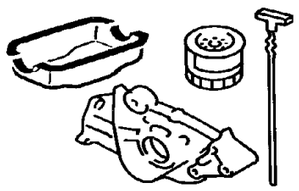

4.0L-800
Manifolds

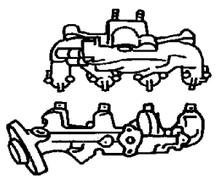

4.0L-900
Crankcase Ventilation

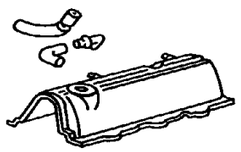

Group - 4.0L Engine 4.0L Six Cylinder

Illustration Title — Group-Fig. No.

Cylinder Head
Cylinder Head ..... Fig. 4.0L - 210

Cylinder Block
Cylinder Block ..... Fig. 4.0L - 310

Crankshaft, Piston and Torque Converter
Crankshaft, Piston and Torque Converter ..... Fig. 4.0L - 410

Camshafts & Valves
Camshaft and Valves ..... Fig. 4.0L - 510

Timing Belt and Cover
Timing Cover ..... Fig. 4.0L - 610

Engine Oiling
Engine Oiling ..... Fig. 4.0L - 710

Manifolds
Manifold, Intake and Exhaust ..... Fig. 4.0L - 810

Crankcase Ventilation
Crankcase Ventilation ..... Fig. 4.0L - 910

Cylinder Head
Figure 4.0L-210

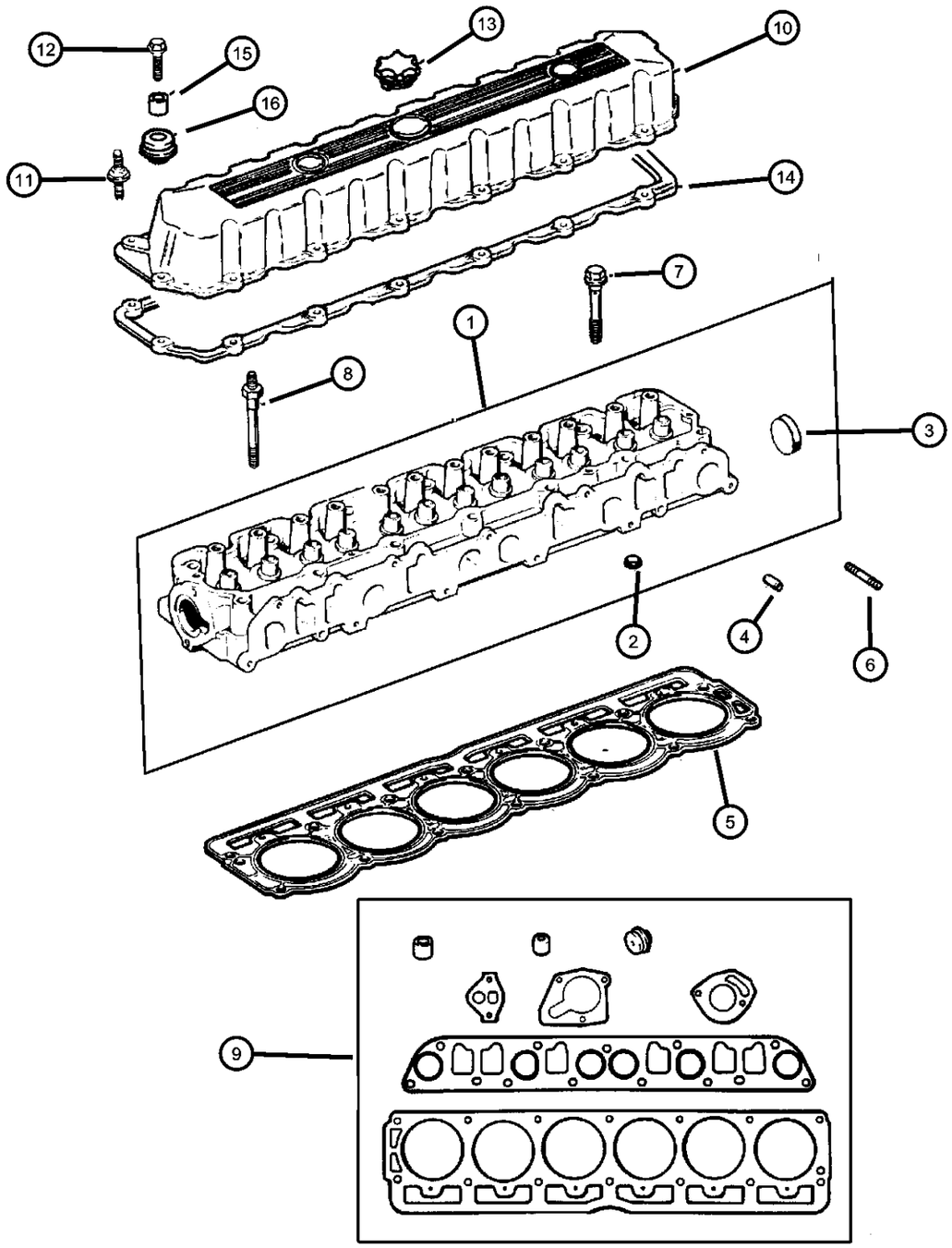

ITEM	PART NUMBER	QTY	LINE	SERIES	BODY	ENGINE	TRANS	TRIM	DESCRIPTION
NOTE: ER0=All 4.0L Engines DBB=All Manual Transmissions									
1	53020622	1				ER0			HEAD, Cylinder
2	J4007434	4				ER0			PLUG, Cylinder Block Oil Hole
3	J3105394	1				EP0			PLUG, Cylinder Block Oil Hole
4	J3172318	2				EP0, ER0			DOWEL, Cylinder Head To Intake
5	53020754	1				ER0			GASKET, Cylinder Head
6	53010165	2				EP0, ER0			STUD, .375-16/.375-24x1.75
7									BOLT, Cylinder Head
	06035514	5				ER0			w/o Dome
	06035515	2				ER0			w/Dome
8	06035516	7				ER0			STUD, Double Ended, .50-13/.437-14x6.00
9	04636982	1				ER0	DBB		GASKET PACKAGE, Engine
10	53020323	1				ER0			COVER, Cylinder Head
11	06035968AA	7				ER0			STUD, .250-20x2.00
12	06035566	8				ER0			BOLT, Hex Flange Head, .250-20x1.00
13	04777536	1				ER0			CAP, Oil Filler
14	53020758	1				ER0			GASKET, Valve Cover
15	53020598	15				ER0			SLEEVE, Torque Limiter
16	53010424	15				ER0			GROMMET, Insulator

CHEROKEE (XJ)

SERIES	LINE	BODY	ENGINE	TRANSMISSION
L = LOWLINE	T = JEEP - 2WD B = JEEP - 2WD (RHD) J = JEEP - 4WD U = JEEP - 4WD (RHD)	72 = SPORT UTILITY 2-DR 74 = SPORT UTILITY 4-DR	ENC = 2.5L 4 Cyl Turbo Diesel Engine EPB = 2.5L 4 Cylinder Engine EPE = Engine - 2.5L Power Tech I-4 Cyl. ERH = 4.0L Power Tech I-6 Engine	DDQ = 5-Speed Manual Transmission DGS = 4-Speed Automatic AW4 Transmission DGO = ALL AUTOMATIC TRANSMISSIONS DBB = ALL MANUAL TRANSMISSIONS

Cylinder Block
Figure 4.0L-310

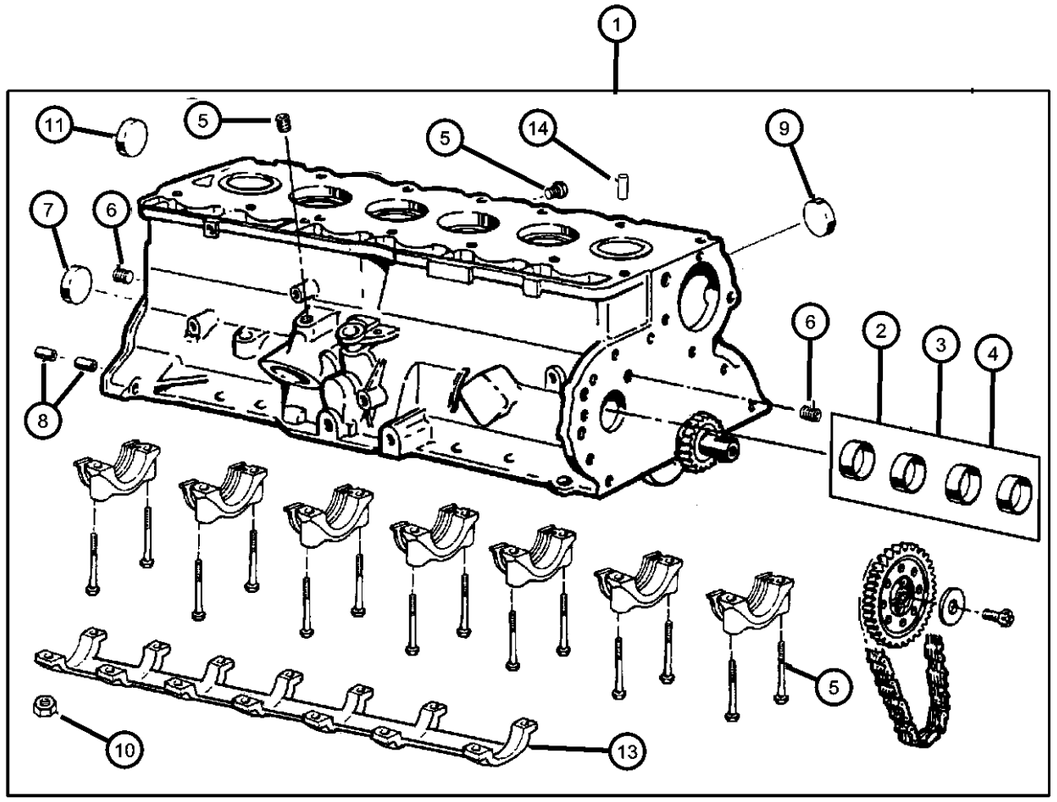

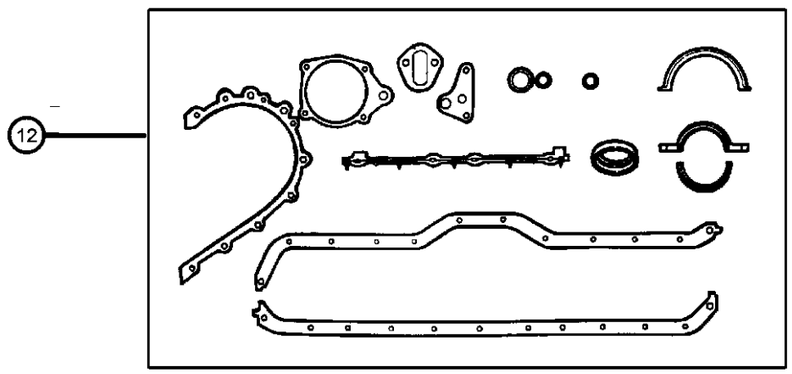

ITEM	PART NUMBER	QTY	LINE	SERIES	BODY	ENGINE	TRANS	TRIM	DESCRIPTION
NOTE: ER0=All 4.0L Engines DBB=All Manual Transmissions									
1	04883025	1				ER0			BLOCK, Short
2	J3205711	1				ER0			BEARING KIT, Camshaft, Standard
3	J3205711	1							BEARING PACKAGE, Camshaft, Standard Size, (NOT REQUIRED)
4	J3208985	1				ER0			BEARING KIT, Camshaft, .010 Oversize
5	06035207	14				ER0			STUD, .500-13/.375-16x3.97
6	06034166	4				ER0			PLUG, Cylinder Block Oil Hole
7	J3172313	1				EP0			PLUG, Camshaft
8	J4005148	2				ER0			DOWEL, Transmission
9	J3105394	6				ER0			PLUG, Cylinder Block Oil Hole
10	00152474	14				ER0			NUT, Hex Flange Lock, .375-16
11	53020465	1				EP0			PLUG, Cylinder Block
12	04740008	1				ER0	DBB		GASKET PACKAGE, Engine
13	53020566	1				ER0			BRACE, Main Bearing Cap
14	00141215	2				ER0			DOWEL, .312 x .500
-15	53009803	1				ER0			HEATER, Engine Block

CHEROKEE (XJ)

SERIES	LINE	BODY	ENGINE	TRANSMISSION
L = LOWLINE	T = JEEP - 2WD B = JEEP - 2WD (RHD) J = JEEP - 4WD U = JEEP - 4WD (RHD)	72 = SPORT UTILITY 2-DR 74 = SPORT UTILITY 4-DR	ENC = 2.5L 4 Cyl Turbo Diesel Engine EPB = 2.5L 4 Cylinder Engine EPE = Engine - 2.5L Power Tech I-4 Cyl. ERH = 4.0L Power Tech I-6 Engine	DDQ = 5-Speed Manual Transmission DGS = 4-Speed Automatic AW4 Transmission DGO = ALL AUTOMATIC TRANSMISSIONS DBB = ALL MANUAL TRANSMISSIONS

AR = use ase required - = Non illustrrated part

Crankshaft, Piston and Torque Converter
Figure 4.0L-410

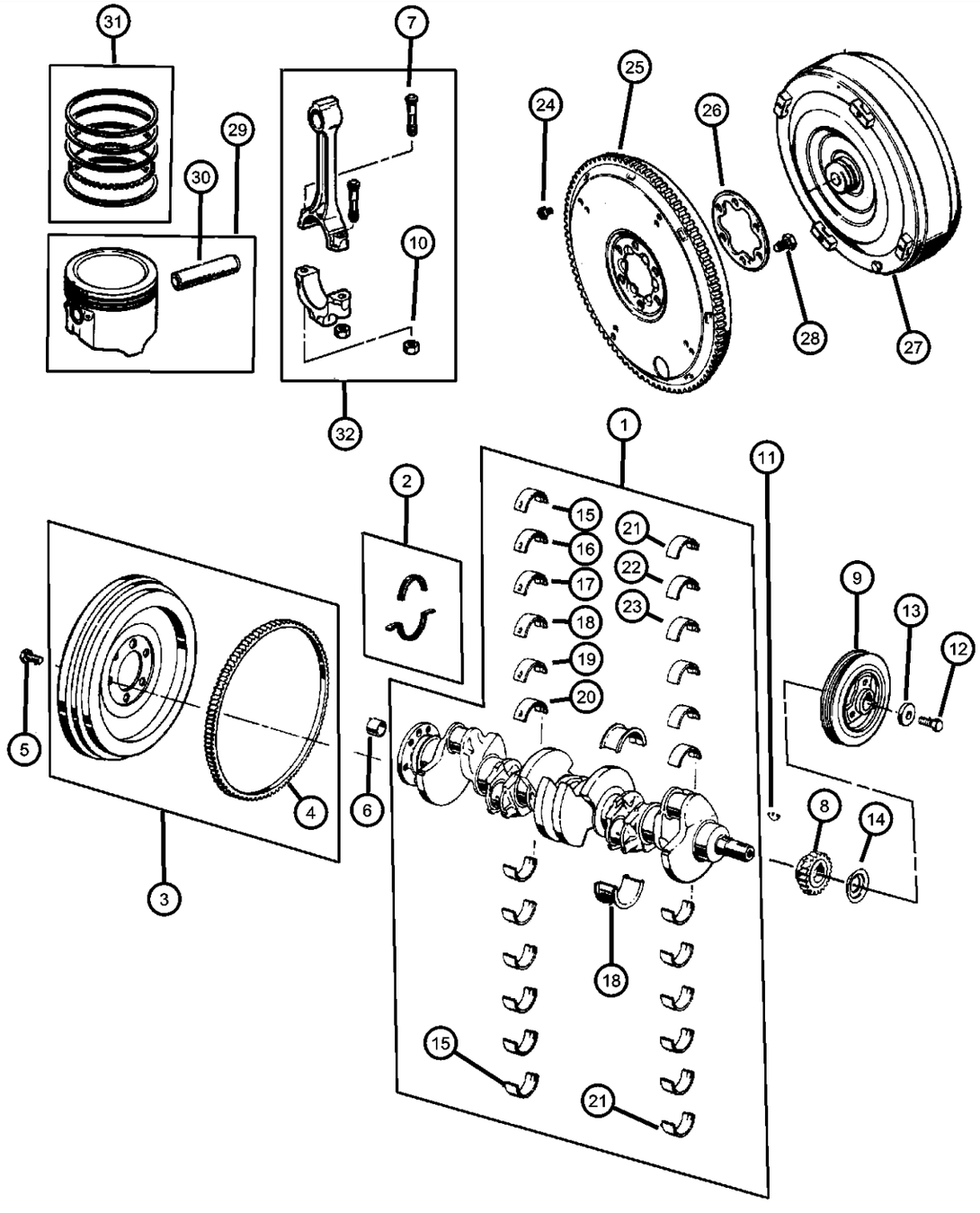

ITEM	PART NUMBER	QTY	LINE	SERIES	BODY	ENGINE	TRANS	TRIM	DESCRIPTION
NOTE: ER0=All 4.0L Engines DBB=All Manual Transmissions DG0=All Automatic Transmissions DGS=Aisin 4 Speed Automatic Transmission									
1	04864726	1				ER0	DBB		CRANKSHAFT
2	04778126	1				ER0			SEAL PACKAGE, Crankshaft
3	53020519	1				ER0	DBB		FLYWHEEL
4	J3179741	1				ER0	DBB		GEAR, Ring
5	J3170524	6				ER0	DBB		BOLT, Flywheel
6									BEARING, Pilot
	53009180	1				ER0	DBB		Sleeve and Bearing
	53009181	1				ER0	DBB		Bearing
7	53020123	12				ER0			BOLT, Connecting Rod
8	53020443	1				ER0			GEAR, Crankshaft
9	33002920	1				ER0			DAMPER, Crankshaft
10	J4006385	12				ER0			NUT, Hex Flange, .3437-24
11	06034749	1				EP0, ER0			KEY, Crankshaft Sprocket
12	06029736	1				EP0, ER0			BOLT
13	J3230155	1				EP0, ER0			WASHER, Plain
14	J3173076	1				EP0, ER0			SLINGER, Oil
15	83507079	6				ER0			BEARING PACKAGE, Crankshaft, Standard
16	83507080	AR				EP0, ER0			BEARING PACKAGE, Crankshaft, .001 Undersize
17	83507083	AR				EP0, ER0			BEARING PACKAGE, Crankshaft, .010 Undersize
18	83507084	1				EP0, ER0			BEARING PACKAGE, Crankshaft Thrust, Standard Size, Standard
19	83507086	AR				EP0, ER0			BEARING PACKAGE, Crankshaft Thrust, .001" Undersize
20	83507090	AR				EP0, ER0			BEARING PACKAGE, Crankshaft Thrust, .010" Undersize
21	83500300	8				EP0			BEARING KIT, Connecting Rod, Standard
22	83501397	AR				EP0, ER0			BEARING KIT, Connecting Rod, .001 Undersize
23	83500301	AR				EP0, ER0			BEARING KIT, Connecting Rod, .010 Undersize
24	34202497	4				ER0	DG0		BOLT, Hex Head, M10x1.50x14
25	52118551	1				ER0	DG0		PLATE, Drive Plate
26	J3214094	1				ER0	DG0		PLATE, Drive Plate Backing

CHEROKEE (XJ)

SERIES	LINE	BODY	ENGINE	TRANSMISSION
L = LOWLINE	T = JEEP - 2WD B = JEEP - 2WD (RHD) J = JEEP - 4WD U = JEEP - 4WD (RHD)	72 = SPORT UTILITY 2-DR 74 = SPORT UTILITY 4-DR	ENC = 2.5L 4 Cyl Turbo Diesel Engine EPB = 2.5L 4 Cylinder Engine EPE = Engine - 2.5L Power Tech I-4 Cyl. ERH = 4.0L Power Tech I-6 Engine	DDQ = 5-Speed Manual Transmission DGS = 4-Speed Automatic AW4 Transmission DGO = ALL AUTOMATIC TRANSMISSIONS DBB = ALL MANUAL TRANSMISSIONS

AR = use ase required - = Non illustrrated part

Crankshaft, Piston and Torque Converter
Figure 4.0L-410

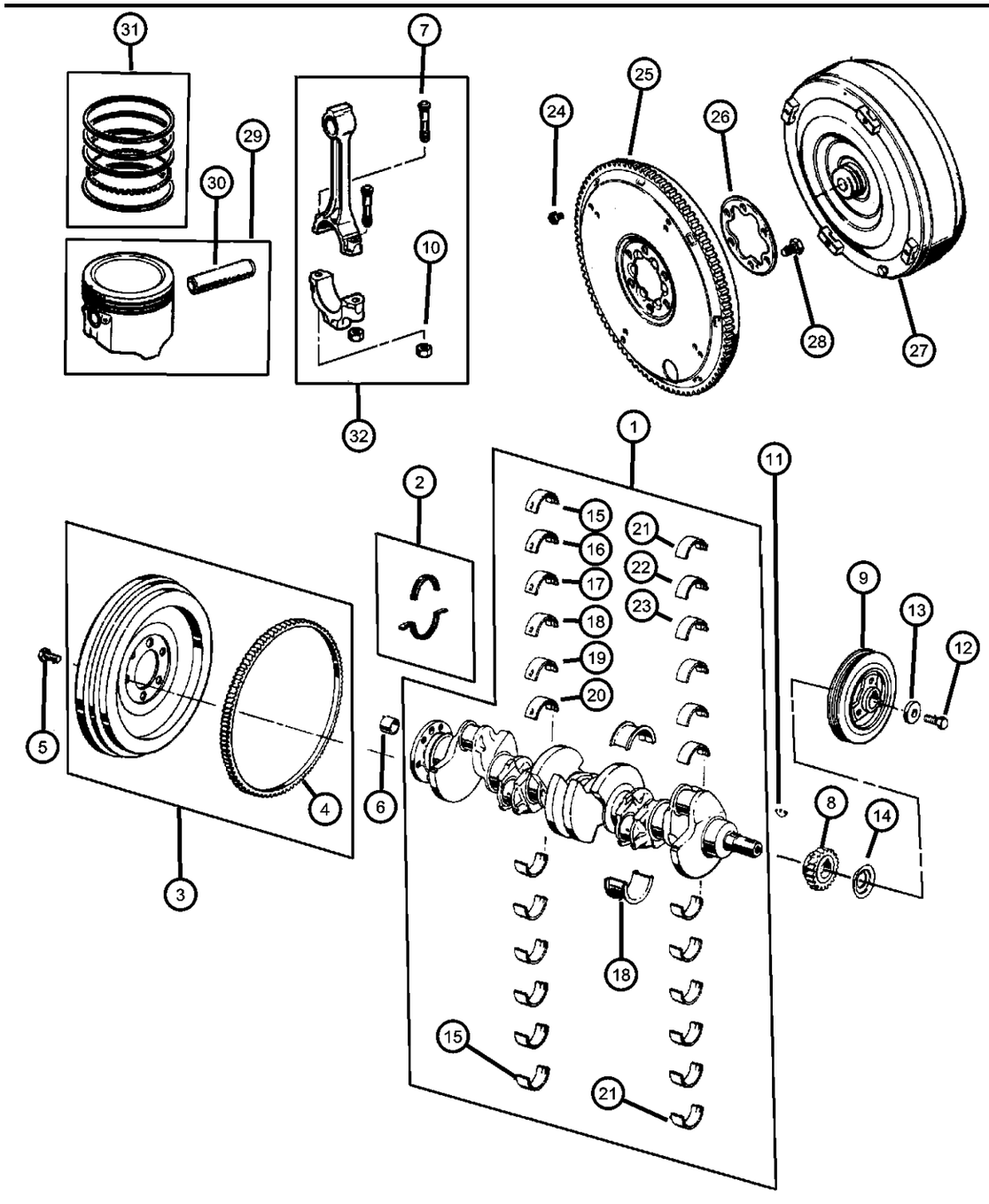

ITEM	PART NUMBER	QTY	LINE	SERIES	BODY	ENGINE	TRANS	TRIM	DESCRIPTION
27	53003431	1	B			ER0	DGS		CONVERTER, Torque
28	J3151407	6				ER0	DG0		BOLT, Hex Head, .50-20x.56
29									PISTON PIN AND ROD
	04798329	AR				EP0			B Size, 3.8742
	04798330	AR				EP0			C Size, 3.8746
	04798331	AR				EP0			D Size, 3.8750
	04798332	AR				EP0			E Size, 3.8754
	04798333	AR				EP0			F Size, 3.8758
30	04798333	AR							PIN, Piston, Serviced in Piston Assembly, (NOT SERVICED),
31	04798878	1				ER0	DBB		RING PACKAGE, Piston, Standard Size Complete Engine
32	04798878	1							ROD, Connecting, Serviced in Piston Assembly, (NOT SERVICED)

CHEROKEE (XJ)

SERIES	LINE	BODY	ENGINE	TRANSMISSION
L = LOWLINE	T = JEEP - 2WD B = JEEP - 2WD (RHD) J = JEEP - 4WD U = JEEP - 4WD (RHD)	72 = SPORT UTILITY 2-DR 74 = SPORT UTILITY 4-DR	ENC = 2.5L 4 Cyl Turbo Diesel Engine EPB = 2.5L 4 Cylinder Engine EPE = Engine - 2.5L Power Tech I-4 Cyl. ERH = 4.0L Power Tech I-6 Engine	DDQ = 5-Speed Manual Transmission DGS = 4-Speed Automatic AW4 Transmission DGO = ALL AUTOMATIC TRANSMISSIONS DBB = ALL MANUAL TRANSMISSIONS

AR = use ase required - = Non illustrrated part

Camshaft and Valves
Figure 4.0L-510

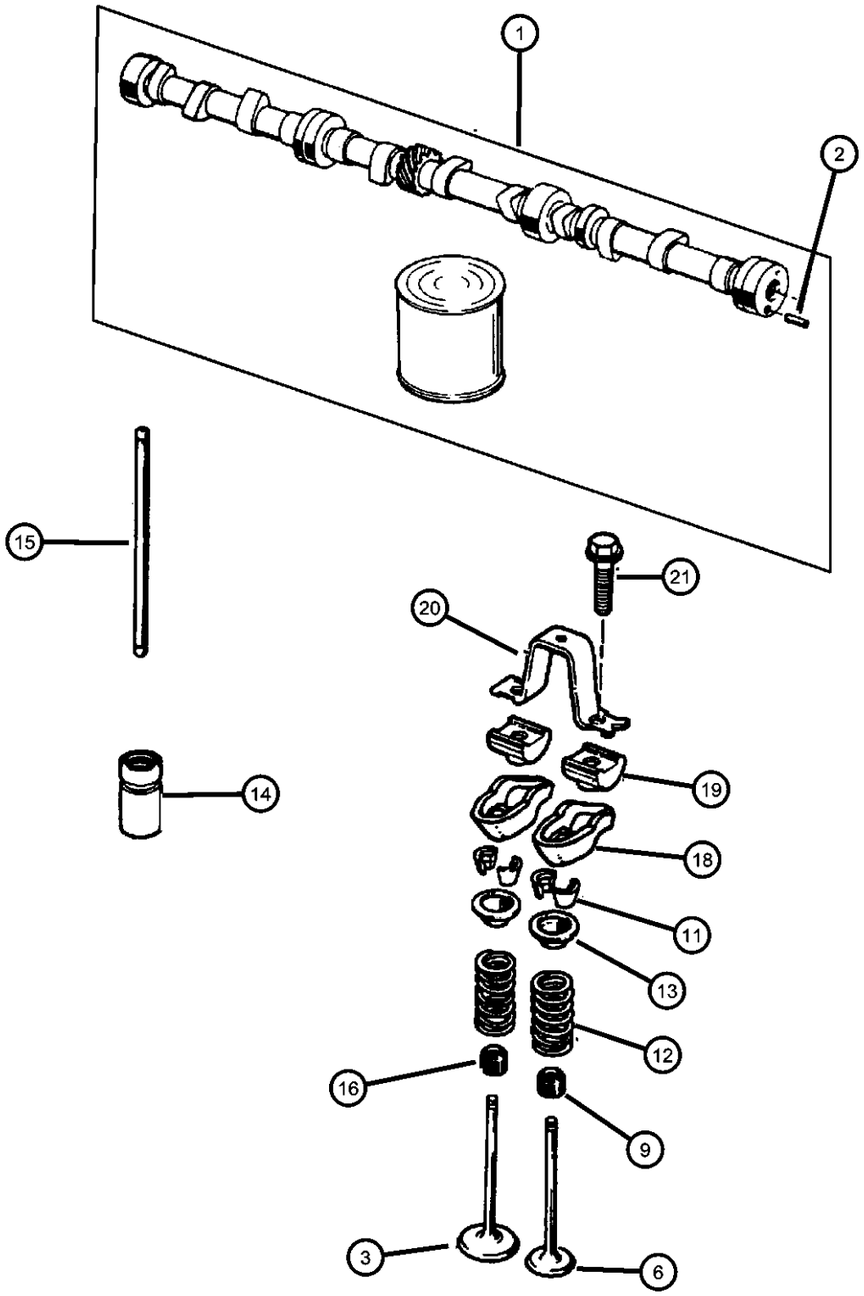

ITEM	PART NUMBER	QTY	LINE	SERIES	BODY	ENGINE	TRANS	TRIM	DESCRIPTION
NOTE: ER0=All 4.0L Engines									
1	53020438	1				ER0			CAMSHAFT
2	J0456384	1				EP0			DOWEL, Camshaft Sprocket
3	33003515	6				ER0			VALVE, Intake, Standard, Standard
-4	33003519	AR				EP0, ER0			VALVE, Intake, .003" O/S
-5	33003575	AR				EP0, ER0			VALVE, Intake, .015" O/S
6	04637537	6				ER0			VALVE, Exhaust, Standard, Standard
-7	04637538	AR				EP0, ER0			VALVE, Exhaust, .003" O/S
-8	04637539	AR				EP0, ER0			VALVE, Exhaust, .015 Oversize
9	53009886	6				ER0			SEAL, Valve Guide, Standard
-10	33002733	AR				EP0, ER0			SEAL, Valve Guide, .015" Oversize, .015 O/S
11	33003521	24				ER0			LOCK, Valve Spring Retainer
12	53020556	12				ER0			SPRING, Valve
13	33004626	12				ER0			RETAINER, Valve Spring
14	04740269	12				ER0			TAPPET, Valve
15	33002986	12				ER0			PUSH ROD, Valve
16	53009886	6				ER0			SEAL, Valve Guide
-17	33003016	AR				EP0, ER0			SEAL, Valve Guide, .015" Oversize
18	04778743	12				ER0			ROCKER ARM, Valve
19	J3235090	12				ER0			PIVOT, Rocker Arm
20	J3236513	6				ER0			BRIDGE, Rocker Arm
21	J9425708	12				ER0			BOLT, Hex Flange Head, .312-18x1.25

CHEROKEE (XJ)

SERIES	LINE	BODY	ENGINE	TRANSMISSION
L = LOWLINE	T = JEEP - 2WD B = JEEP - 2WD (RHD) J = JEEP - 4WD U = JEEP - 4WD (RHD)	72 = SPORT UTILITY 2-DR 74 = SPORT UTILITY 4-DR	ENC = 2.5L 4 Cyl Turbo Diesel Engine EPB = 2.5L 4 Cylinder Engine EPE = Engine - 2.5L Power Tech I-4 Cyl. ERH = 4.0L Power Tech I-6 Engine	DDQ = 5-Speed Manual Transmission DGS = 4-Speed Automatic AW4 Transmission DGO = ALL AUTOMATIC TRANSMISSIONS DBB = ALL MANUAL TRANSMISSIONS

Timing Cover
Figure 4.0L-610

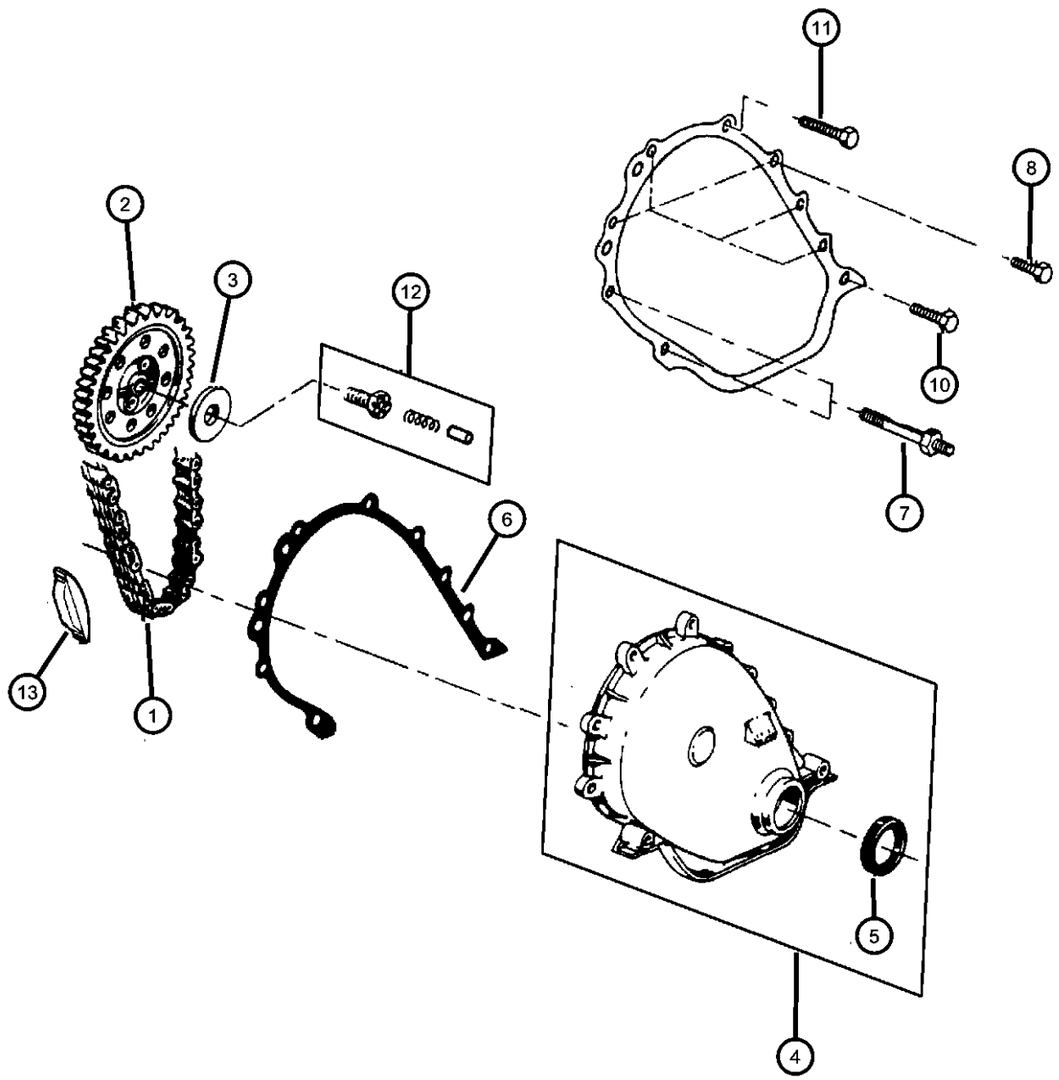

ITEM	PART NUMBER	QTY	LINE	SERIES	BODY	ENGINE	TRANS	TRIM	DESCRIPTION
NOTE: ER0=All 4.0L Engines									
-1	05189874AA	1				ER0			CHAIN PACKAGE, Timing
2	53020444	1				ER0			CHAIN, Timing
3	53020445	1				ER0			SPROCKET, Camshaft
4	J3173284	1				EP0, ER0			WASHER, Flat, .206 Diameter
5	53020222	1				EP0, ER0			COVER, Timing Belt
6	33004681	1				EP0, ER0			SEAL, Front Main Crankshaft
7	53020487	1				EP0, ER0			GASKET, Front Cover
8	06035744	1				ER0			STUD
9	J4006906	5				EP0, ER0			BOLT, Hex
-10	06034604	2				EP0			SCREW
11	06034914	1				EP0, ER0			BOLT, Hex Flange Head, .250-20x1.24
12	06034604	2				EP0			SCREW
13	83502890	1				ER0			SCREW AND WASHER, Hex
14	33003446	1				EP0, ER0			SNUBBER, Timing Chain

CHEROKEE (XJ)

SERIES	LINE	BODY	ENGINE	TRANSMISSION
L = LOWLINE	T = JEEP - 2WD B = JEEP - 2WD (RHD) J = JEEP - 4WD U = JEEP - 4WD (RHD)	72 = SPORT UTILITY 2-DR 74 = SPORT UTILITY 4-DR	ENC = 2.5L 4 Cyl Turbo Diesel Engine EPB = 2.5L 4 Cylinder Engine EPE = Engine - 2.5L Power Tech I-4 Cyl. ERH = 4.0L Power Tech I-6 Engine	DDQ = 5-Speed Manual Transmission DGS = 4-Speed Automatic AW4 Transmission DGO = ALL AUTOMATIC TRANSMISSIONS DBB = ALL MANUAL TRANSMISSIONS

Engine Oiling
Figure 4.0L-710

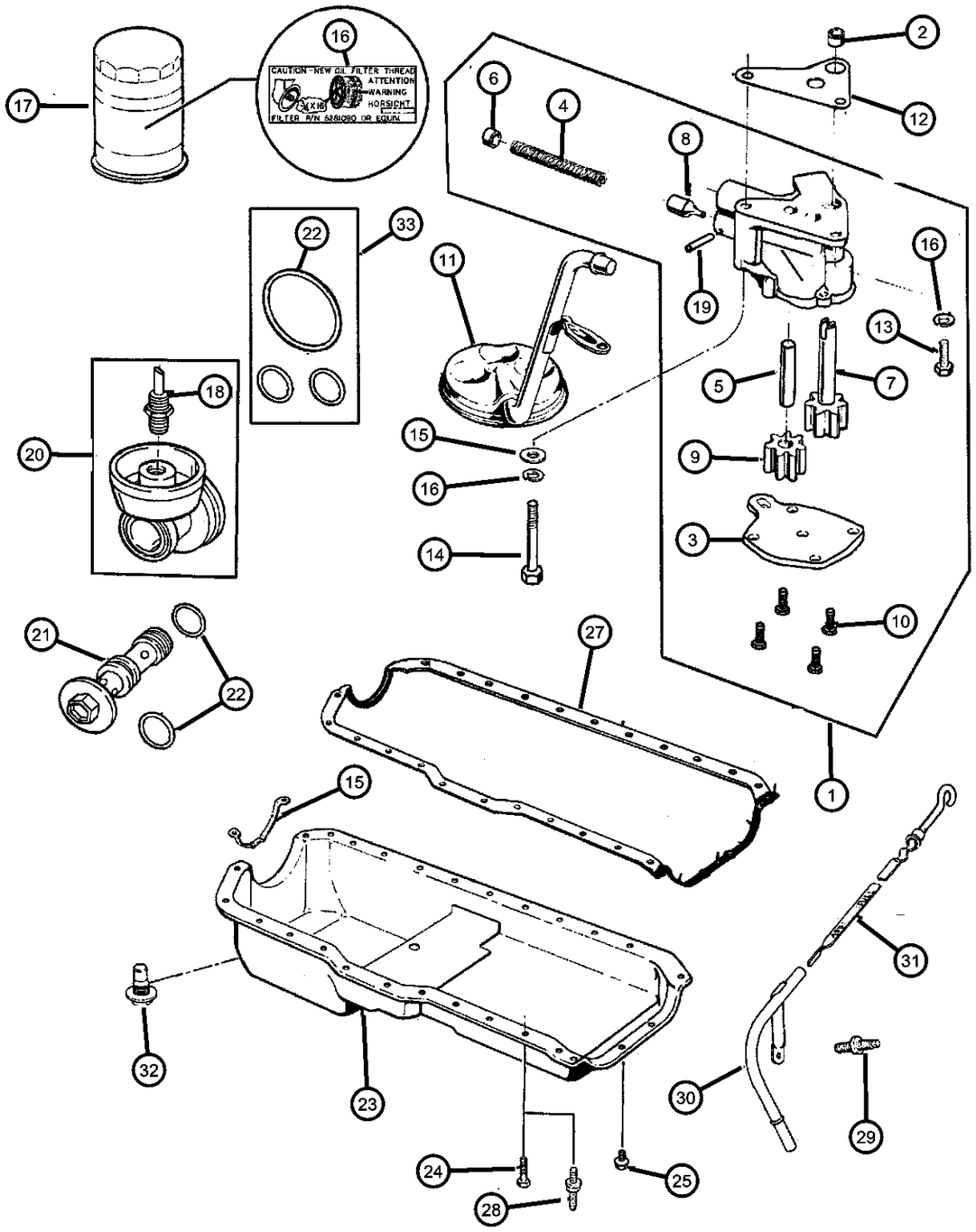

ITEM	PART NUMBER	QTY	LINE	SERIES	BODY	ENGINE	TRANS	TRIM	DESCRIPTION
NOTE: ER0=All 4.0L Engines									
1	J3241399	1				ER0			PUMP, Engine Oil
2	J4005149	1				EP0, ER0			DOWEL, Oil Pump
3	J3241733	1				ER0			COVER, Engine Oil Pump
4	J3239668	1				ER0			SPRING, Oil Pressure Relief Valve
5	J3171956	1				ER0			SHAFT, Oil Pump
6	J3171958	1				ER0			RETAINER, Oil Release Valve
7	J3172334	1				ER0			GEAR, Oil Pump
8	J3188661	1				ER0			PLUNGER, Oil Pressure Relief Valve
9	J3196843	1				ER0			GEAR, Oil Pump Driven
10	J9416852	4				ER0			SCREW, Hex Flange Head, .25-20x.50
11	33002696	1				ER0			TUBE, Oil Pump Inlet
12	J3172332	1				EP0, ER0			GASKET, Oil Pump
13	06022235	1				EP0, ER0			BOLT AND WASHER, Hex Head, .312-18x1.00
14	00154593	1				EP0, ER0			SCREW, Hex Head Coned, .312-18x2.625
15	J3243116	1				ER0			SUPPORT, Engine Oil Pan
16	53008907	1							LABEL, Oil Filter Thread I.D.
17	05281090	1				EP0, ER0			FILTER, Engine Oil
18	53007563	1				ER0			CONNECTOR, Oil Filter
19	J0271448	1				ER0			PIN, Roll, 5/32" x 1.00"
20	53020080	1				ER0			ADAPTER, Oil Filter
21	53020237	1				ER0			BOLT, Oil Filter Adapter
22	33002972	1				ER0			O RING, Oil Filter Adapter
23	53020833	1				ER0			PAN, Engine Oil
24	06034732	16				ER0			SCREW AND WASHER, Hex Head, .25-20x.545
25	06034483	3				ER0			SCREW, Hex Head Coned, .312-18x.875
-26	06034733	1				ER0			STUD, .312-18/.250-20x1.680
27	53007568	1				ER0			GASKET, Oil Pan
28	06034734	8				ER0			BOLT, Double Stud Hex, .250-20x1.437 & .250-20 x.700
29	06035664	1				EP0, ER0			STUD, .312-18x1.560

CHEROKEE (XJ)

SERIES	LINE	BODY	ENGINE	TRANSMISSION
L = LOWLINE	T = JEEP - 2WD B = JEEP - 2WD (RHD) J = JEEP - 4WD U = JEEP - 4WD (RHD)	72 = SPORT UTILITY 2-DR 74 = SPORT UTILITY 4-DR	ENC = 2.5L 4 Cyl Turbo Diesel Engine EPB = 2.5L 4 Cylinder Engine EPE = Engine - 2.5L Power Tech I-4 Cyl. ERH = 4.0L Power Tech I-6 Engine	DDQ = 5-Speed Manual Transmission DGS = 4-Speed Automatic AW4 Transmission DGO = ALL AUTOMATIC TRANSMISSIONS DBB = ALL MANUAL TRANSMISSIONS

Engine Oiling
Figure 4.0L-710

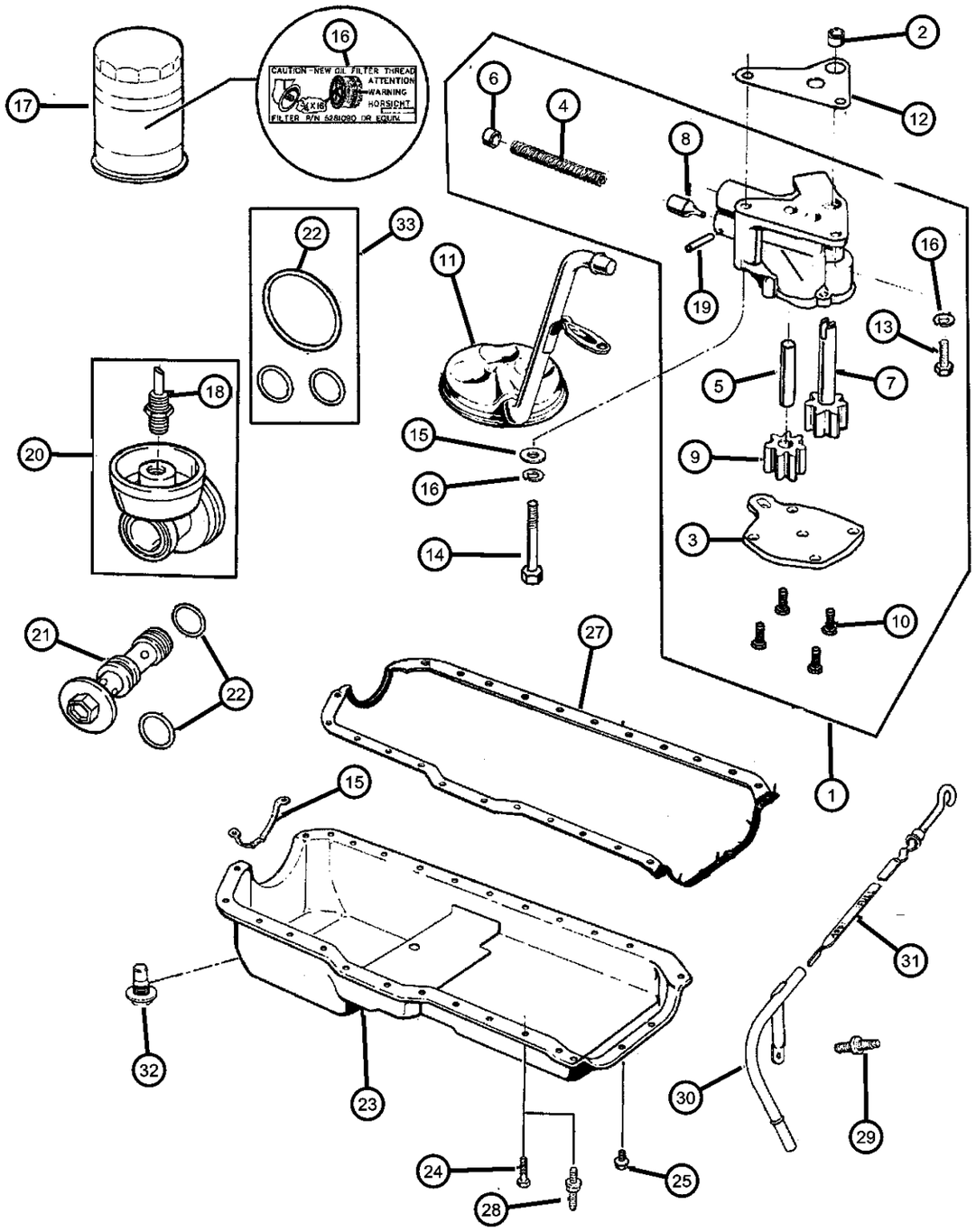

ITEM	PART NUMBER	QTY	LINE	SERIES	BODY	ENGINE	TRANS	TRIM	DESCRIPTION
30	53020782	1				ER0			TUBE, Oil Filler
31	53010445	1				ER0			INDICATOR, Engine Oil Level
32	06035417	1				ER0			PLUG, Oil Drain
33	04720363	1				ER0			SEAL PACKAGE, Oil Filter Adapter

CHEROKEE (XJ)

SERIES	LINE	BODY	ENGINE	TRANSMISSION
L = LOWLINE	T = JEEP - 2WD B = JEEP - 2WD (RHD) J = JEEP - 4WD U = JEEP - 4WD (RHD)	72 = SPORT UTILITY 2-DR 74 = SPORT UTILITY 4-DR	ENC = 2.5L 4 Cyl Turbo Diesel Engine EPB = 2.5L 4 Cylinder Engine EPE = Engine - 2.5L Power Tech I-4 Cyl. ERH = 4.0L Power Tech I-6 Engine	DDQ = 5-Speed Manual Transmission DGS = 4-Speed Automatic AW4 Transmission DGO = ALL AUTOMATIC TRANSMISSIONS DBB = ALL MANUAL TRANSMISSIONS

Manifold, Intake and Exhaust
Figure 4.0L-810

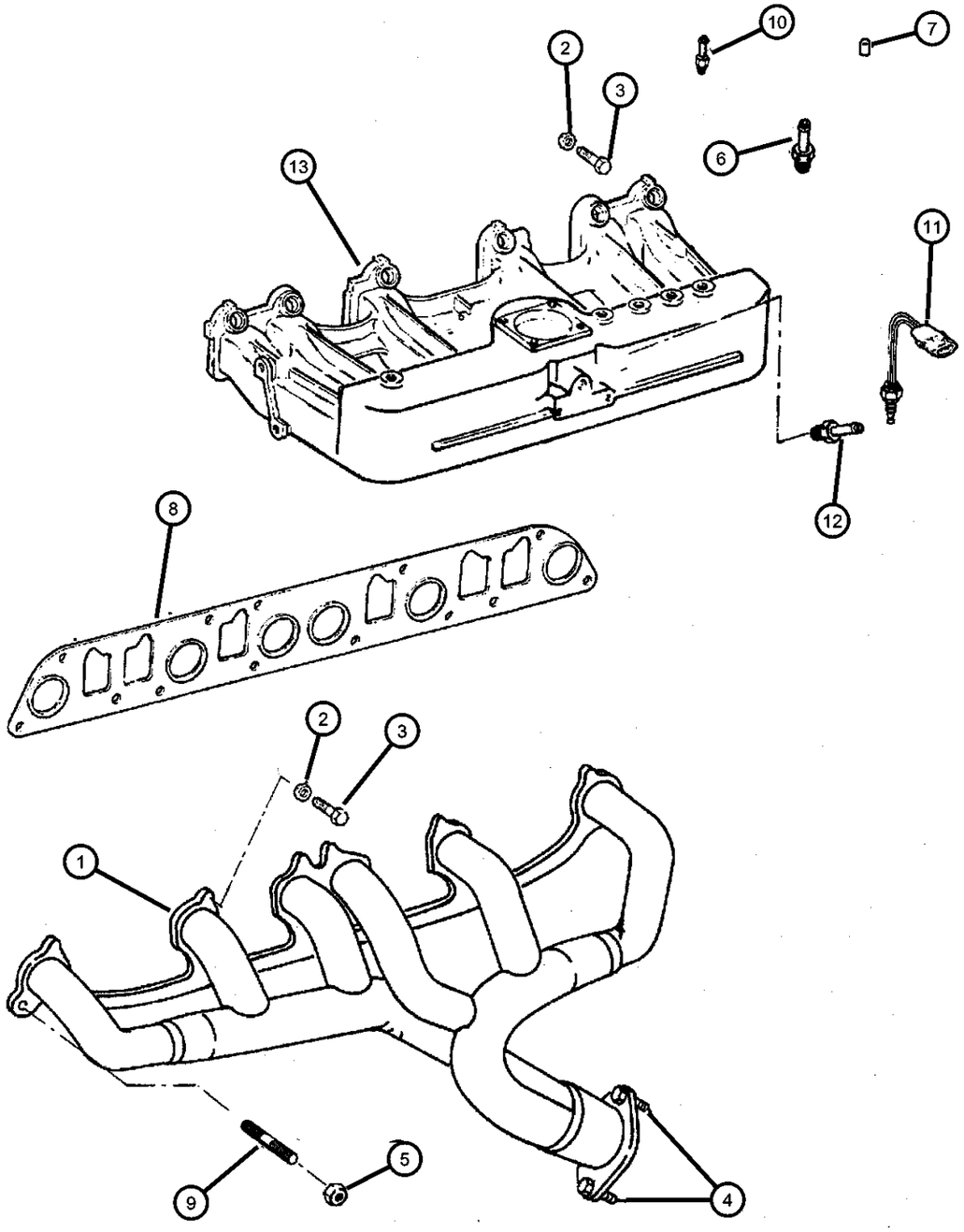

ITEM	PART NUMBER	QTY	LINE	SERIES	BODY	ENGINE	TRANS	TRIM	DESCRIPTION
NOTE: ER0=All 4.0L Engines									
1	33007072	1				ER0			MANIFOLD, Exhaust
2	33004255	11				ER0			WASHER, Manifold Retaining
3	J0186622	8				ER0			BOLT AND RETAINER, Hex Head
4	J4007109	2				ER0			STUD, .375-16x1.69
5	06034984	2				EP0, ER0			NUT, Hex Flange Lock, .375-24
6	53020027	1				ER0			FITTING, Vacuum, Serviced in Manifold
7	03580171	1				ER0			CAP, Vacuum
8	53010238	1				ER0			GASKET, Intake/Exhaust Manifold
9	53010165	2				EP0, ER0			STUD, .375-16/.375-24x1.75
10	53030756	1				ER0			FITTING, Vacuum, Serviced in Manifold
11	56027872	1				EP0, ER0			SENSOR, Air Temperature
12	04854194	1				ER0			FITTING, Vacuum
13	53010237	1				ER0			MANIFOLD, Intake

CHEROKEE (XJ)

SERIES	LINE	BODY	ENGINE	TRANSMISSION
L = LOWLINE	T = JEEP - 2WD B = JEEP - 2WD (RHD) J = JEEP - 4WD U = JEEP - 4WD (RHD)	72 = SPORT UTILITY 2-DR 74 = SPORT UTILITY 4-DR	ENC = 2.5L 4 Cyl Turbo Diesel Engine EPB = 2.5L 4 Cylinder Engine EPE = Engine - 2.5L Power Tech I-4 Cyl. ERH = 4.0L Power Tech I-6 Engine	DDQ = 5-Speed Manual Transmission DGS = 4-Speed Automatic AW4 Transmission DGO = ALL AUTOMATIC TRANSMISSIONS DBB = ALL MANUAL TRANSMISSIONS

Crankcase Ventilation
Figure 4.0L-910

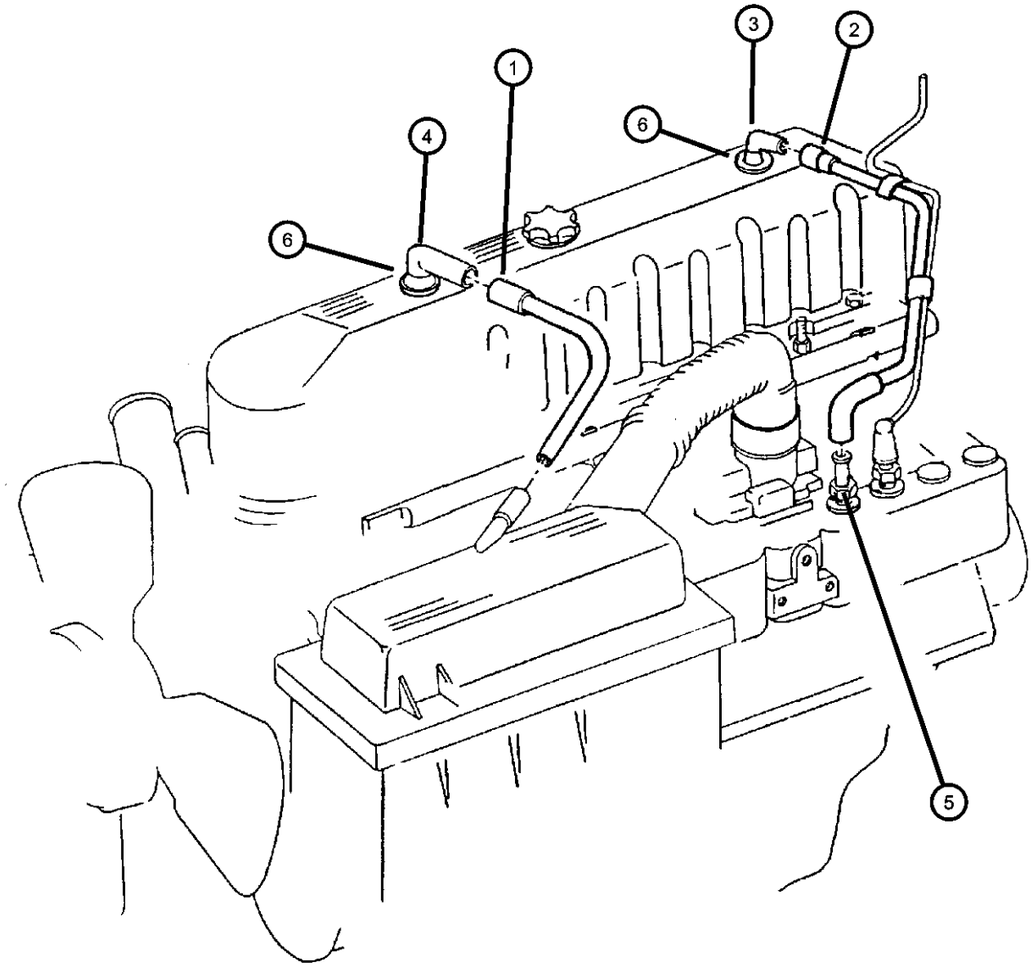

ITEM	PART NUMBER	QTY	LINE	SERIES	BODY	ENGINE	TRANS	TRIM	DESCRIPTION
NOTE: ER0=All 4.0L Engines									
1	04854180	1				ER0			TUBE, Cylinder Cover to A/Clnr
2	04854265	1				ER0			TUBE, Crankcase Vent To Intake Manifold
3	53030495	1				ER0			TUBE, Crankcase Vent To Air Cleaner
4	53030991	1				ER0			FITTING, Crankcase Vent Tube
5	53020027	1				ER0			FITTING, Vacuum
6	02946079	2				ER0			GROMMET, Crankcase Vent

CHEROKEE (XJ)

SERIES	LINE	BODY	ENGINE	TRANSMISSION
L = LOWLINE	T = JEEP - 2WD B = JEEP - 2WD (RHD) J = JEEP - 4WD U = JEEP - 4WD (RHD)	72 = SPORT UTILITY 2-DR 74 = SPORT UTILITY 4-DR	ENC = 2.5L 4 Cyl Turbo Diesel Engine EPB = 2.5L 4 Cylinder Engine EPE = Engine - 2.5L Power Tech I-4 Cyl. ERH = 4.0L Power Tech I-6 Engine	DDQ = 5-Speed Manual Transmission DGS = 4-Speed Automatic AW4 Transmission DGO = ALL AUTOMATIC TRANSMISSIONS DBB = ALL MANUAL TRANSMISSIONS

Group - 2.5LD

Engine 2.5L Four Cylinder (Turbo Diesel)

2.5LD-200
Cylinder Head

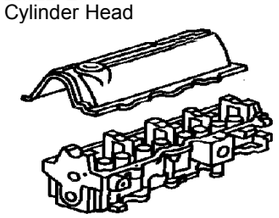

2.5LD-300
Cylinder Block

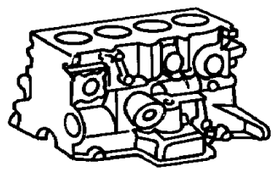

2.5LD-400
Crankshaft, Piston and Drive Plate

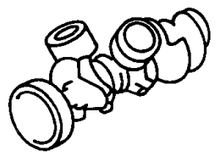

2.5LD-500
Camshafts & Valves

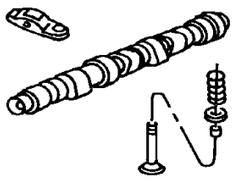

2.5LD-600
Timing Belt and Cover

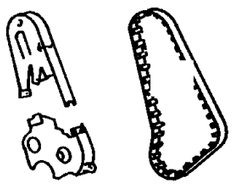

2.5LD-700
Engine Oiling

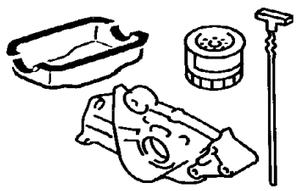

2.5LD-800
Manifolds

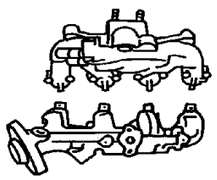

2.5LD-900
Crankcase Ventilation

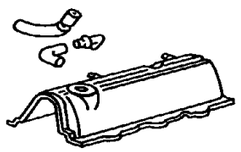

Group - 2.5LD Engine 2.5L Four Cylinder (Turbo Diesel)

Illustration Title — Group-Fig. No.

Cylinder Head
Cylinder Head ..... Fig. 2.5LD - 210

Cylinder Block
Cylinder Block ..... Fig. 2.5LD - 310

Crankshaft, Piston and Drive Plate
Crankshaft, Piston and Torque Converter ..... Fig. 2.5LD - 410

Camshafts & Valves
Camshaft and Valves ..... Fig. 2.5LD - 510

Timing Belt and Cover
Timing Cover ..... Fig. 2.5LD - 610

Engine Oiling
Engine Oiling ..... Fig. 2.5LD - 710
Oil Lines ..... Fig. 2.5LD - 720

Manifolds
Manifold, Intake and Exhaust ..... Fig. 2.5LD - 810

Crankcase Ventilation
Crankcase Ventilation ..... Fig. 2.5LD - 910

Cylinder Head
Figure 2.5LD-210

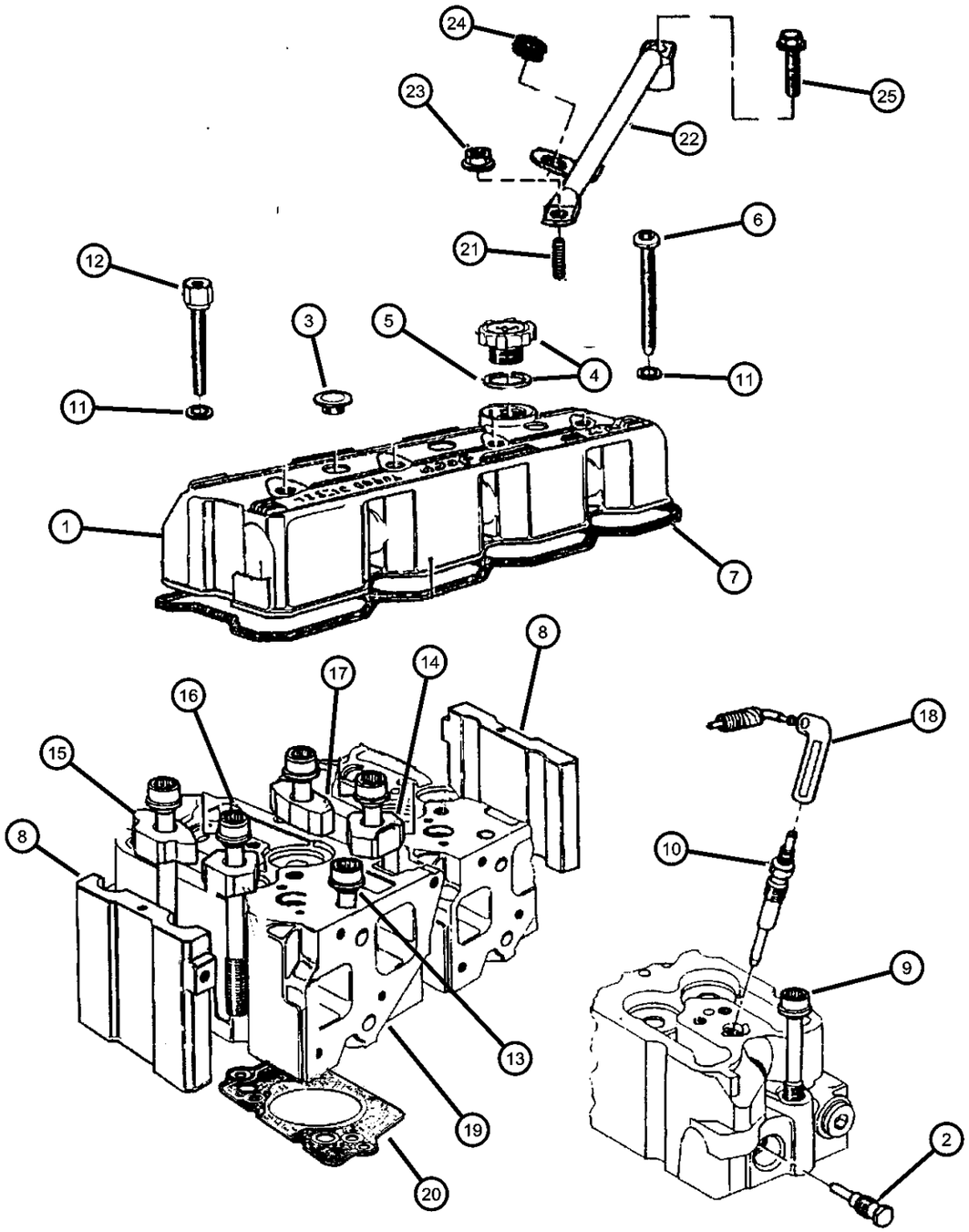

ITEM	PART NUMBER	QTY	LINE	SERIES	BODY	ENGINE	TRANS	TRIM	DESCRIPTION
NOTE: EN0=All 2.5L Diesel Engines									
1	04864747	1				EN0			COVER, Cylinder Head
2	04863770	4				EN0			PLUG, Dummy
3	04864555	3				EN0			PLUG, Cylinder Block
4	04863741	1				EN0			CAP, Oil Filler
5	04720300	1				EN0			GASKET, Oil Filler Cap
6	04863749	4				EN0			SCREW
7	04863789	1				EN0			GASKET, Valve Cover
8	04882407	2				EN0			CLAMP, Cylinder Head
9	04720671	4				EN0			BOLT, Cylinder Head
10	04863826	4				EN0			GLOW PLUG
11	04864554	4				EN0			SEAL, Valve Cover Bolt
12	04863752	2				EN0			SCREW
13	04720233	4				EN0			BOLT, Cylinder Head
14	04864038	5				EN0			CLAMP, Cylinder Head
15	04864039	2				EN0			CLAMP, Cylinder Head
16	04720235	10				EN0			BOLT, Cylinder Head
17	04864040	3				EN0			CLAMP, Cylinder Head
18	04864557	1				EN0			WIRING, Glow Plug
19	04883416AA	4				EN0			HEAD, Cylinder
20									GASKET, Cylinder Head
	04863781	1				EN0			1.42
	04863782	AR				EN0			1.52
	04863783	AR				EN0			1.62
21	04864745	1				EN0			BOLT
22	04864746	1				EN0			BRACKET, Alternator Upper
23	04778936	9				EN0			NUT, Suction Pipe Attaching
24	04720362	2				EN0			GASKET, Engine Oil Indicator Pipe
25	04864537	4				EN0			BOLT, 8Mx20

CHEROKEE (XJ)

SERIES	LINE	BODY	ENGINE	TRANSMISSION
L = LOWLINE	T = JEEP - 2WD B = JEEP - 2WD (RHD) J = JEEP - 4WD U = JEEP - 4WD (RHD)	72 = SPORT UTILITY 2-DR 74 = SPORT UTILITY 4-DR	ENC = 2.5L 4 Cyl Turbo Diesel Engine EPB = 2.5L 4 Cylinder Engine EPE = Engine - 2.5L Power Tech I-4 Cyl. ERH = 4.0L Power Tech I-6 Engine	DDQ = 5-Speed Manual Transmission DGS = 4-Speed Automatic AW4 Transmission DGO = ALL AUTOMATIC TRANSMISSIONS DBB = ALL MANUAL TRANSMISSIONS

Cylinder Block
Figure 2.5LD-310

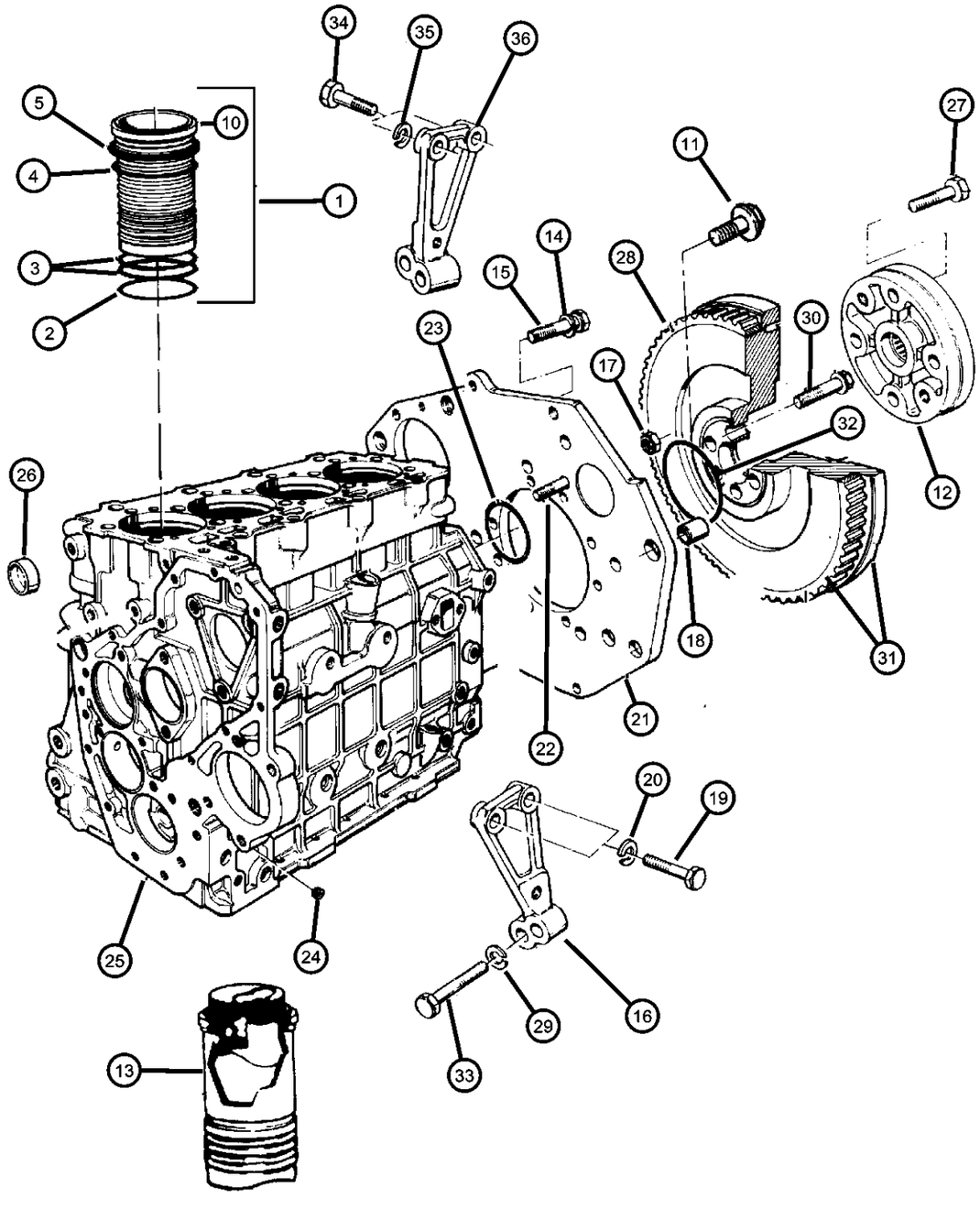

ITEM	PART NUMBER	QTY	LINE	SERIES	BODY	ENGINE	TRANS	TRIM	DESCRIPTION
1997 3/4 Engine - 04897849AA									
1998 3/4 Engine - 05011964AA									
1999 3/4 Engine - 05014068AA									
NOTE: EN0=All 2.5L Diesel Engines									
1	04723118	4				EN0			SHIM KIT, Cylinder Liner
2	04720625	4				EN0			O RING, Cylinder Liner
3	04720627	8				EN0			O RING, Cylinder Liner
4	04720626	4				EN0			O RING, Cylinder Liner
5	04720620	4				EN0			SHIM, Cylinder Liner, 0.15mm
-6	04720624	AR				EN0			SHIM, Cylinder Liner, 0.17mm
-7	04720621	AR				EN0			SHIM, Cylinder Liner, 0.20mm
-8	04720623	AR				EN0			SHIM, Cylinder Liner, 0.23mm
-9	04720622	AR				EN0			SHIM, Cylinder Liner, 0.25mm
10	04720611	4				EN0			LINER, Cylinder
11	04864537	4				EN0			BOLT, 8Mx20
12	04778808	1				EN0			HOUSING, Pilot Bearing
13	04864532	4				EN0			LINER AND PISTON, Cylinder
14	04741768	4				EN0			WASHER, Adaptor Plate
15	04720675	4				EN0			BOLT, Adaptor Plate
16	04778806	1				EN0			STIFFENER, Flywheel Housing
17	04778961	22				EN0			NUT
18	04797758	2				EN0			DOWEL, Transmission Adapter
19	04720712	2				EN0			BOLT, M10x45
20	04720686	5				EN0			WASHER, Tow Hook
21	04886254AA	1				EN0			HOUSING, Flywheel
22	04720677	6				EN0			STUD, Adaptor Plate
23	04863833	1				EN0			O RING
24	04883425AA	2				EN0			PLUG
25	04864189	1				EN0			BLOCK, Cylinder
26	04778887	1				EN0			PLUG, Cylinder Block Oil Hole
27	04864534	7				EN0			BOLT, Adaptor Plate
28	04883427AA	1				EN0			GEAR, Ring
29	04723272	2				EN0			WASHER, Injection Pump
30	04720232	6				EN0			BOLT, Flywheel

CHEROKEE (XJ)

SERIES	LINE	BODY	ENGINE	TRANSMISSION
L = LOWLINE	T = JEEP - 2WD B = JEEP - 2WD (RHD) J = JEEP - 4WD U = JEEP - 4WD (RHD)	72 = SPORT UTILITY 2-DR 74 = SPORT UTILITY 4-DR	ENC = 2.5L 4 Cyl Turbo Diesel Engine EPB = 2.5L 4 Cylinder Engine EPE = Engine - 2.5L Power Tech I-4 Cyl. ERH = 4.0L Power Tech I-6 Engine	DDQ = 5-Speed Manual Transmission DGS = 4-Speed Automatic AW4 Transmission DGO = ALL AUTOMATIC TRANSMISSIONS DBB = ALL MANUAL TRANSMISSIONS

AR = use ase required - = Non illustrrated part

Cylinder Block
Figure 2.5LD-310

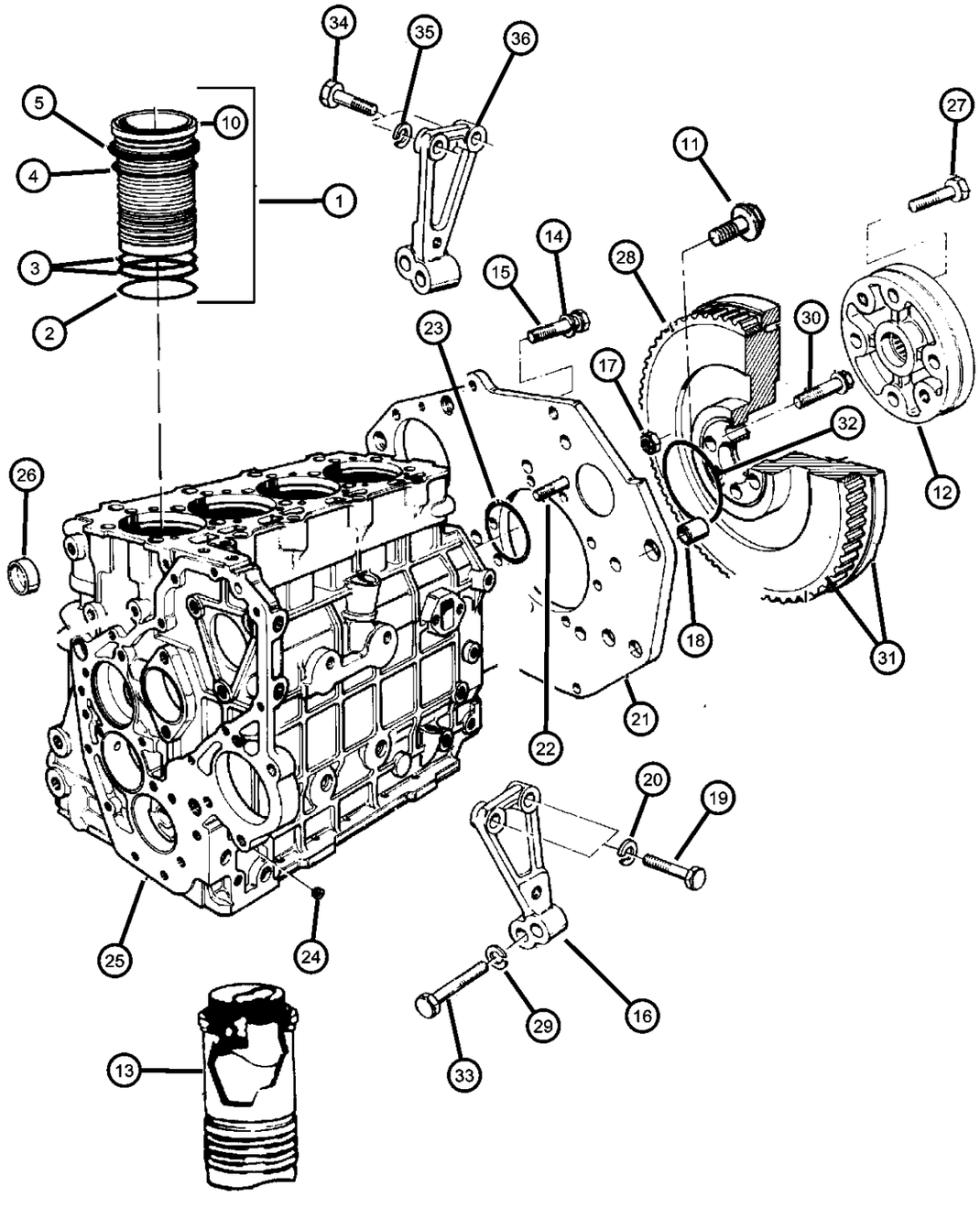

ITEM	PART NUMBER	QTY	LINE	SERIES	BODY	ENGINE	TRANS	TRIM	DESCRIPTION
31	04883426AA	1				EN0			FLYWHEEL
32	04720240	1				EN0			O RING, Flywheel To Crankshaft
33	04797766	2				EN0			BOLT, M12x55
34	04723157	2				EN0			BOLT, Hex Flange Head, M10x35
35	04720686	5				EN0			WASHER, Tow Hook
36	04796394	1				EN0			STIFFENER, Flywheel Housing

CHEROKEE (XJ)

SERIES	LINE	BODY	ENGINE	TRANSMISSION
L = LOWLINE	T = JEEP - 2WD B = JEEP - 2WD (RHD) J = JEEP - 4WD U = JEEP - 4WD (RHD)	72 = SPORT UTILITY 2-DR 74 = SPORT UTILITY 4-DR	ENC = 2.5L 4 Cyl Turbo Diesel Engine EPB = 2.5L 4 Cylinder Engine EPE = Engine - 2.5L Power Tech I-4 Cyl. ERH = 4.0L Power Tech I-6 Engine	DDQ = 5-Speed Manual Transmission DGS = 4-Speed Automatic AW4 Transmission DGO = ALL AUTOMATIC TRANSMISSIONS DBB = ALL MANUAL TRANSMISSIONS

Crankshaft, Piston and Torque Converter
Figure 2.5LD-410

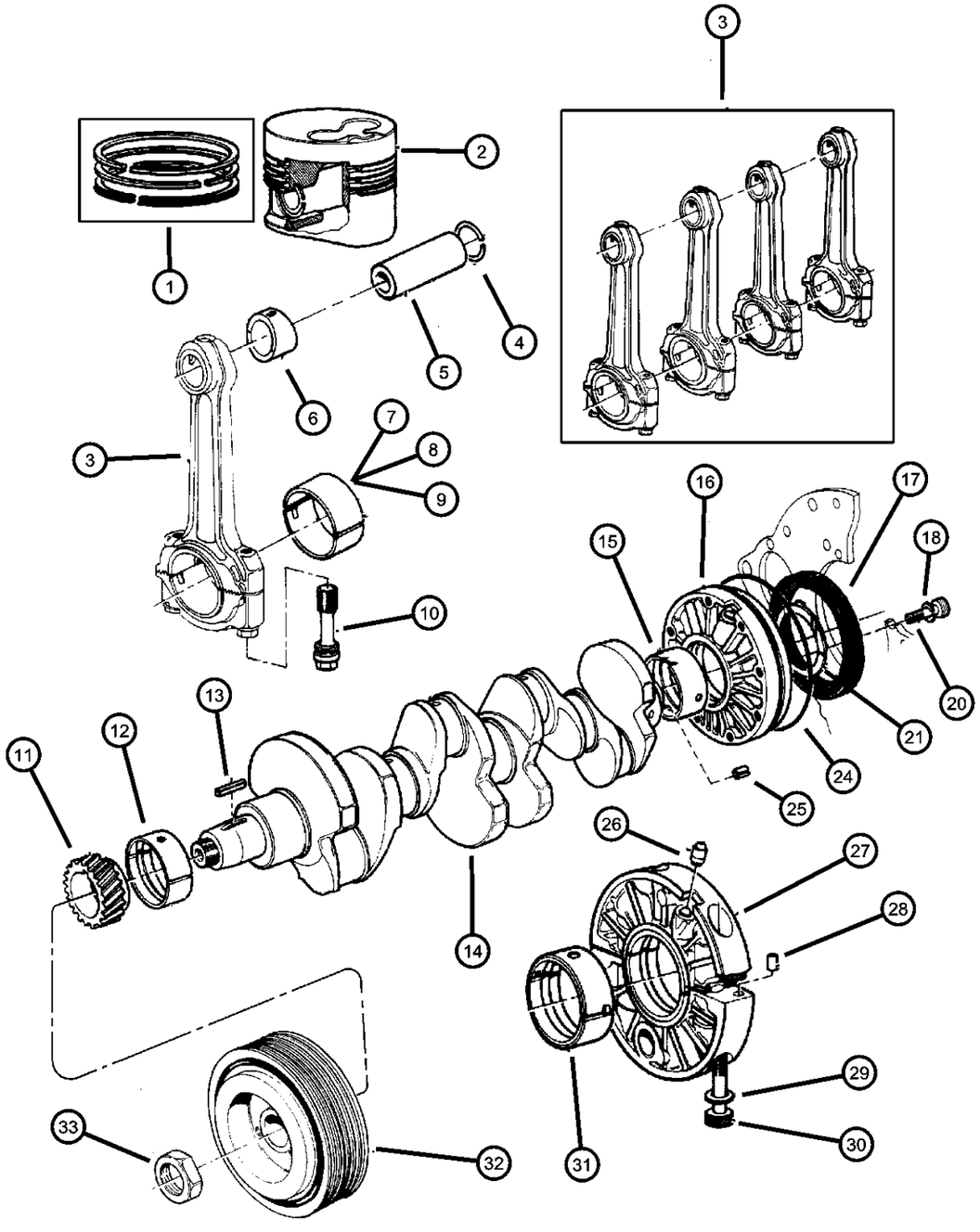

ITEM	PART NUMBER	QTY	LINE	SERIES	BODY	ENGINE	TRANS	TRIM	DESCRIPTION
NOTE: EN0=All 2.5L Diesel Engines									
1	04720084	4				EN0			RING KIT, Piston, Standard
2	04864190	4				EN0			PISTON
3	04723122	1				EN0			ROD, Connecting
4	04720099	4				EN0			RING, Piston Pin
5	04720099	4							PIN, Piston, Serviced in Piston, (NOT SERVICED)
6	04723160	4				EN0			BUSHING, Connecting Rod
7	04720877	4				EN0			BUSHING, Connecting Rod
8	04720882	4				EN0			BEARING, Connecting Rod, .010" U/S
9	04720883	4				EN0			BEARING, Connecting Rod, .25 mm U/S
10	04883386AA	8				EN0			BOLT, Connecting Rod
11	04882402	1				EN0			GEAR, Crankshaft
12									BEARING, Crankshaft
	04720885	1				EN0			Standard
	04720886	1				EN0			.125mm
	04720887	1				EN0			.250mm
13	04720274	1				EN0			KEY, Crankshaft Sprocket
14	04864538	1				EN0			CRANKSHAFT
15									BEARING, Crankshaft
	04864539	1				EN0			Standard
	04864540	1				EN0			.125mm
	04864541	1				EN0			.250mm
16	04864542	1				EN0			HOUSING, Rear Bearing
17	04720283	1				EN0			SEAL, Rear Main Crankshaft
18	04720285	8				EN0			WASHER, Lock, M6
-19	04720285	8							WASHER, Implement Attaching, (NOT REQUIRED)
20	04720284	8				EN0			SCREW, Rear Crankshaft Support
21	04864046	1				EN0			WASHER, Thrust
-22	04864543	1				EN0			WASHER, Thrust, 0.10 Oversize
-23	04864544	1				EN0			WASHER, Thrust, 0.20 Oversize
24	04720277	1				EN0			O RING, Crankshaft Rear Support

CHEROKEE (XJ)

SERIES	LINE	BODY	ENGINE	TRANSMISSION
L = LOWLINE	T = JEEP - 2WD B = JEEP - 2WD (RHD) J = JEEP - 4WD U = JEEP - 4WD (RHD)	72 = SPORT UTILITY 2-DR 74 = SPORT UTILITY 4-DR	ENC = 2.5L 4 Cyl Turbo Diesel Engine EPB = 2.5L 4 Cylinder Engine EPE = Engine - 2.5L Power Tech I-4 Cyl. ERH = 4.0L Power Tech I-6 Engine	DDQ = 5-Speed Manual Transmission DGS = 4-Speed Automatic AW4 Transmission DGO = ALL AUTOMATIC TRANSMISSIONS DBB = ALL MANUAL TRANSMISSIONS

AR = use ase required - = Non illustrrated part

Crankshaft, Piston and Torque Converter
Figure 2.5LD-410

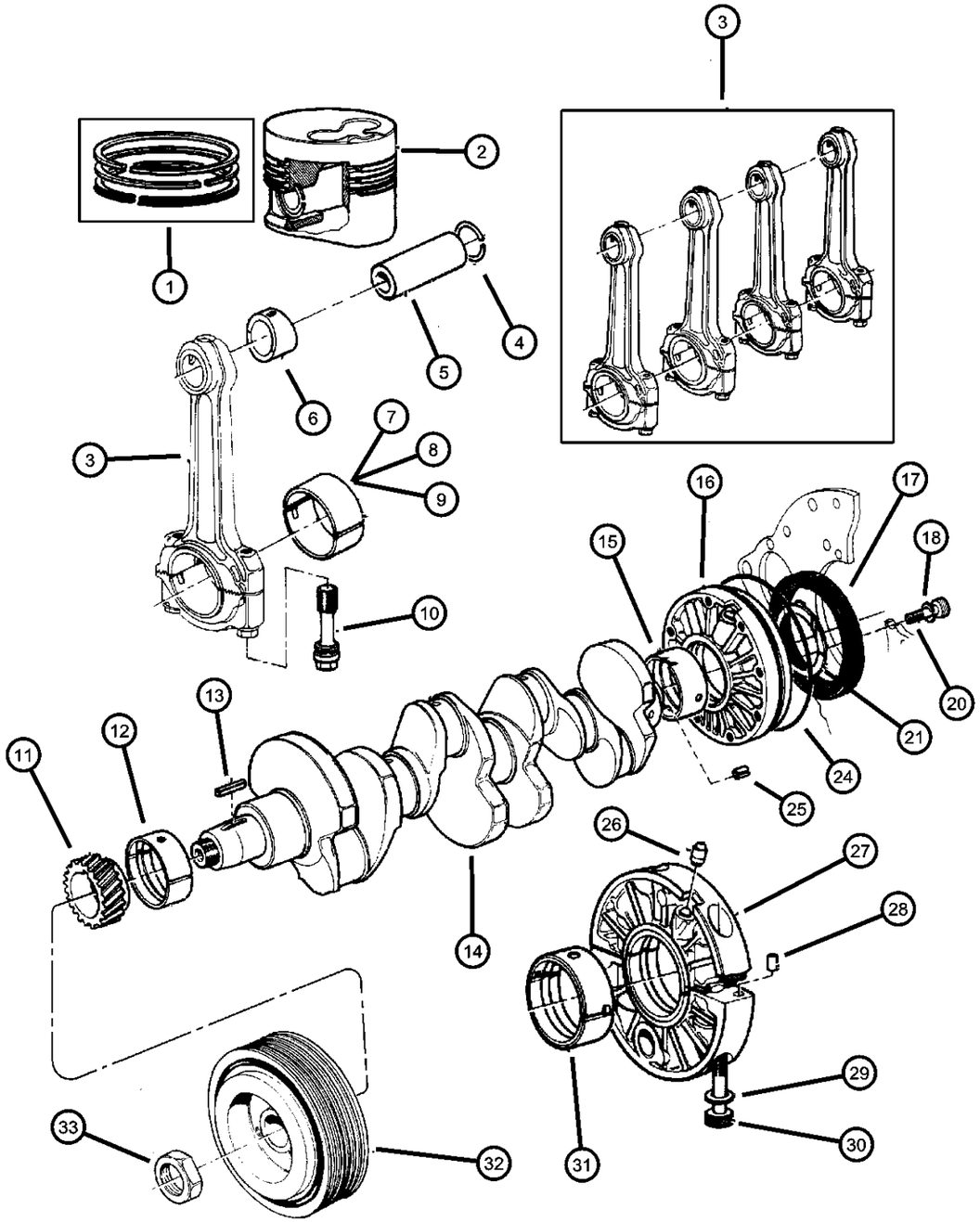

ITEM	PART NUMBER	QTY	LINE	SERIES	BODY	ENGINE	TRANS	TRIM	DESCRIPTION
25	04723158	1				EN0			PIN, Dowel
26	04720246	3				EN0			JET, Piston Oil Cooler
27	04723161	3				EN0			HOUSING, Crankshaft Bearing
28	04720241	2				EN0			DOWEL, Center Bearing Housing
29	04720243	4				EN0			WASHER, Lock, M10
30	04720242	2				EN0			SCREW
31									BEARING, Crankshaft
	04720889	3				EN0			Standard
	04720890	3				EN0			.125mm
	04720892	3				EN0			.250mm
32	04886225AA	1				EN0			DAMPER, Crankshaft
33	04720273	1				EN0			NUT, Damper Pulley

CHEROKEE (XJ)

SERIES	LINE	BODY	ENGINE	TRANSMISSION
L = LOWLINE	T = JEEP - 2WD B = JEEP - 2WD (RHD) J = JEEP - 4WD U = JEEP - 4WD (RHD)	72 = SPORT UTILITY 2-DR 74 = SPORT UTILITY 4-DR	ENC = 2.5L 4 Cyl Turbo Diesel Engine EPB = 2.5L 4 Cylinder Engine EPE = Engine - 2.5L Power Tech I-4 Cyl. ERH = 4.0L Power Tech I-6 Engine	DDQ = 5-Speed Manual Transmission DGS = 4-Speed Automatic AW4 Transmission DGO = ALL AUTOMATIC TRANSMISSIONS DBB = ALL MANUAL TRANSMISSIONS

Camshaft and Valves
Figure 2.5LD-510

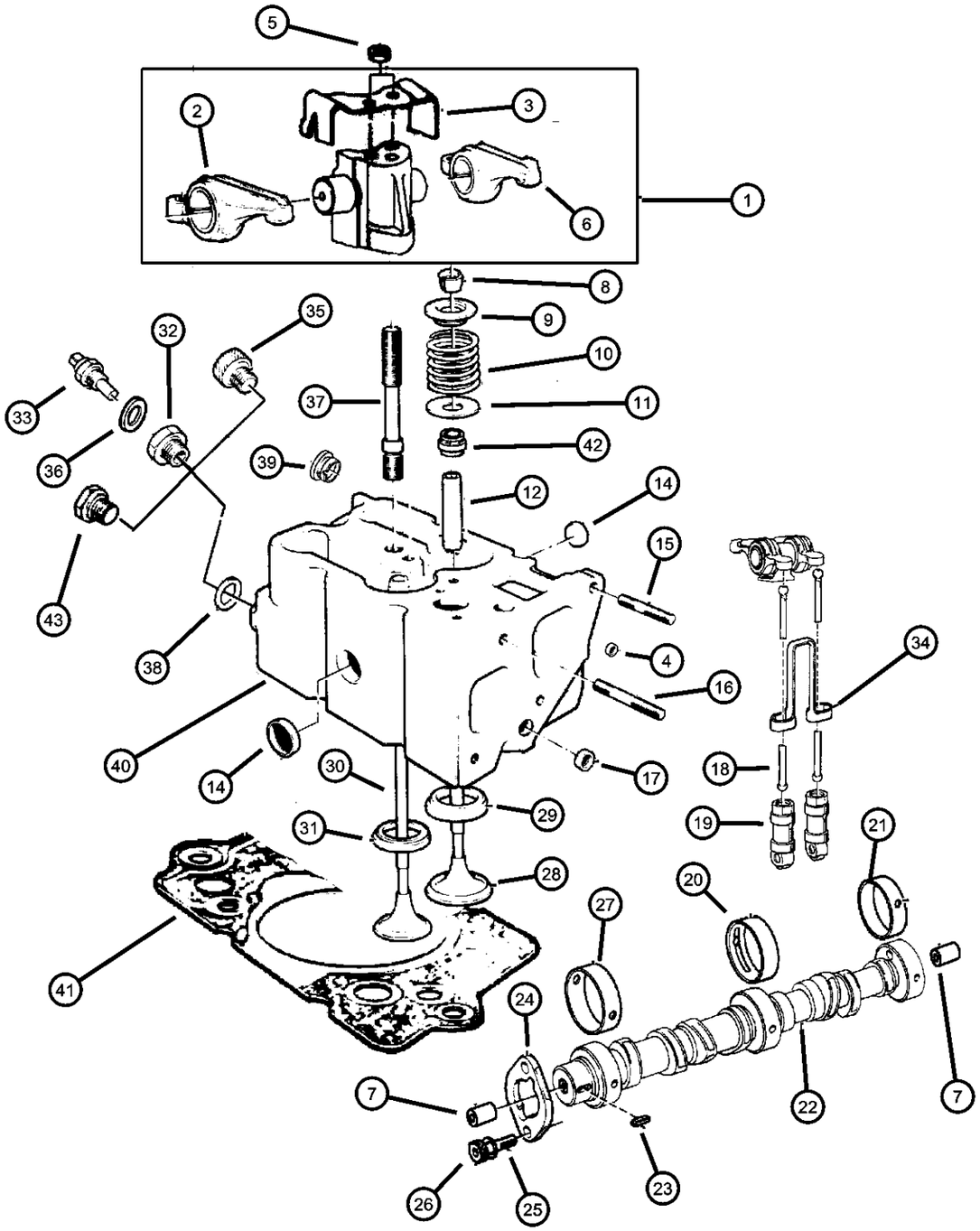

ITEM	PART NUMBER	QTY	LINE	SERIES	BODY	ENGINE	TRANS	TRIM	DESCRIPTION
NOTE: EN0=All 2.5L Diesel Engines									
1	04883397AA	4				EN0			ROCKER ARM, Inlet and Exhaust Valve
2	04883399AA	8				EN0			ROCKER ARM, Exhaust
3	04863861	4				EN0			SPRING, Valve
4	04723196AB	2				EN0			PLUG, Camshaft
5	04883396AA	8				EN0			NUT
6	04883398AA	4				EN0			ROCKER ARM, Intake
7	04723196AB	2				EN0			PLUG, Camshaft
8	04720155	16				EN0			LOCK, Valve Spring Retainer
9	04720152	8				EN0			RETAINER, Valve Spring
10	04720158	8				EN0			SPRING, Valve
11	04720153	8				EN0			WASHER, Plain
12	04883417AA	8				EN0			GUIDE, Intake/Exhaust Valve, Standard Size
-13	04883820AA	AR				EN0			GUIDE, Intake/Exhaust Valve, 0.10mm Oversize
14	04723228	8				EN0			PLUG, Cylinder Block Oil Hole
15	04723241	11				EN0			STUD
16	04882405	8				EN0			STUD
17	04723210	1				EN0			PLUG, Cylinder Block Oil Hole
18	04883395AA	8				EN0			PUSH ROD, Valve
19	04773712	8				EN0			TAPPET, Valve
20	04720220	1				EN0			BEARING, Camshaft
21	04720219	1				EN0			BEARING, Camshaft
22	04882399	1				EN0			CAMSHAFT, Engine
23	04720137	1				EN0			KEY, Camshaft Sprocket
24	04723163	1				EN0			PLATE, Camshaft Thrust
25	04723165	3				EN0			WASHER, P Clip
26	04720135	5				EN0			BOLT, Hex Head, M8x18
27	04720218	1				EN0			BEARING, Camshaft
28	04720146	4				EN0			VALVE, Intake, Standard
29	04883418AA	4				EN0			SEAT, Intake Valve
30	04720148	4				EN0			VALVE, Exhaust, Standard
31	04883419AA	4				EN0			SEAT, Exhaust Valve

CHEROKEE (XJ)

SERIES	LINE	BODY	ENGINE	TRANSMISSION
L = LOWLINE	T = JEEP - 2WD B = JEEP - 2WD (RHD) J = JEEP - 4WD U = JEEP - 4WD (RHD)	72 = SPORT UTILITY 2-DR 74 = SPORT UTILITY 4-DR	ENC = 2.5L 4 Cyl Turbo Diesel Engine EPB = 2.5L 4 Cylinder Engine EPE = Engine - 2.5L Power Tech I-4 Cyl. ERH = 4.0L Power Tech I-6 Engine	DDQ = 5-Speed Manual Transmission DGS = 4-Speed Automatic AW4 Transmission DGO = ALL AUTOMATIC TRANSMISSIONS DBB = ALL MANUAL TRANSMISSIONS

AR = use ase required - = Non illustrrated part

Camshaft and Valves
Figure 2.5LD-510

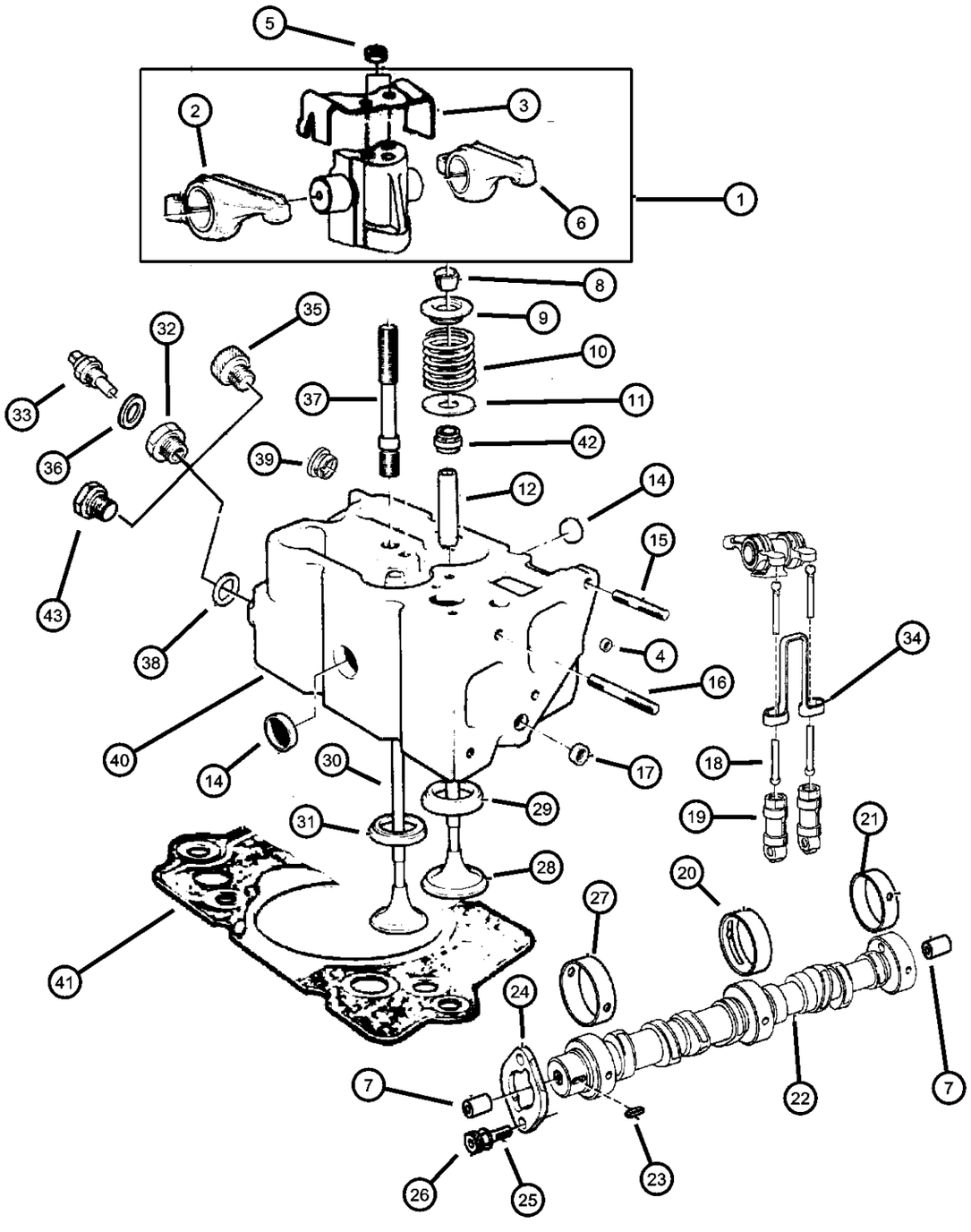

ITEM	PART NUMBER	QTY	LINE	SERIES	BODY	ENGINE	TRANS	TRIM	DESCRIPTION
32	04720581	1				EN0			ADAPTER, Temperature Sensor
33	04863824	1				EN0			SENSOR, Temperature Sending Unit
34	04773701	4				EN0			BRACKET, Antirotation
35	04720159	6				EN0			PLUG, Cylinder Block Oil Hole
36	04720703	11				EN0			WASHER, Plain
37	04882404	8				EN0			STUD
38	04723246	6				EN0			WASHER, Plain
39	04863769	4				EN0			PLUG
40	04883416AA	4				EN0			HEAD, Cylinder
41									GASKET, Cylinder Head
	04863781	1				EN0			1.42
	04863782	AR				EN0			1.52
	04863783	AR				EN0			1.62
42	04863783	AR							SEAL, Valve Guide, (NOT REQUIRED),
43	04863783	AR							PLUG, (NOT REQUIRED)

CHEROKEE (XJ)

SERIES	LINE	BODY	ENGINE	TRANSMISSION
L = LOWLINE	T = JEEP - 2WD B = JEEP - 2WD (RHD) J = JEEP - 4WD U = JEEP - 4WD (RHD)	72 = SPORT UTILITY 2-DR 74 = SPORT UTILITY 4-DR	ENC = 2.5L 4 Cyl Turbo Diesel Engine EPB = 2.5L 4 Cylinder Engine EPE = Engine - 2.5L Power Tech I-4 Cyl. ERH = 4.0L Power Tech I-6 Engine	DDQ = 5-Speed Manual Transmission DGS = 4-Speed Automatic AW4 Transmission DGO = ALL AUTOMATIC TRANSMISSIONS DBB = ALL MANUAL TRANSMISSIONS

AR = use ase required - = Non illustrrated part

Timing Cover
Figure 2.5LD-610

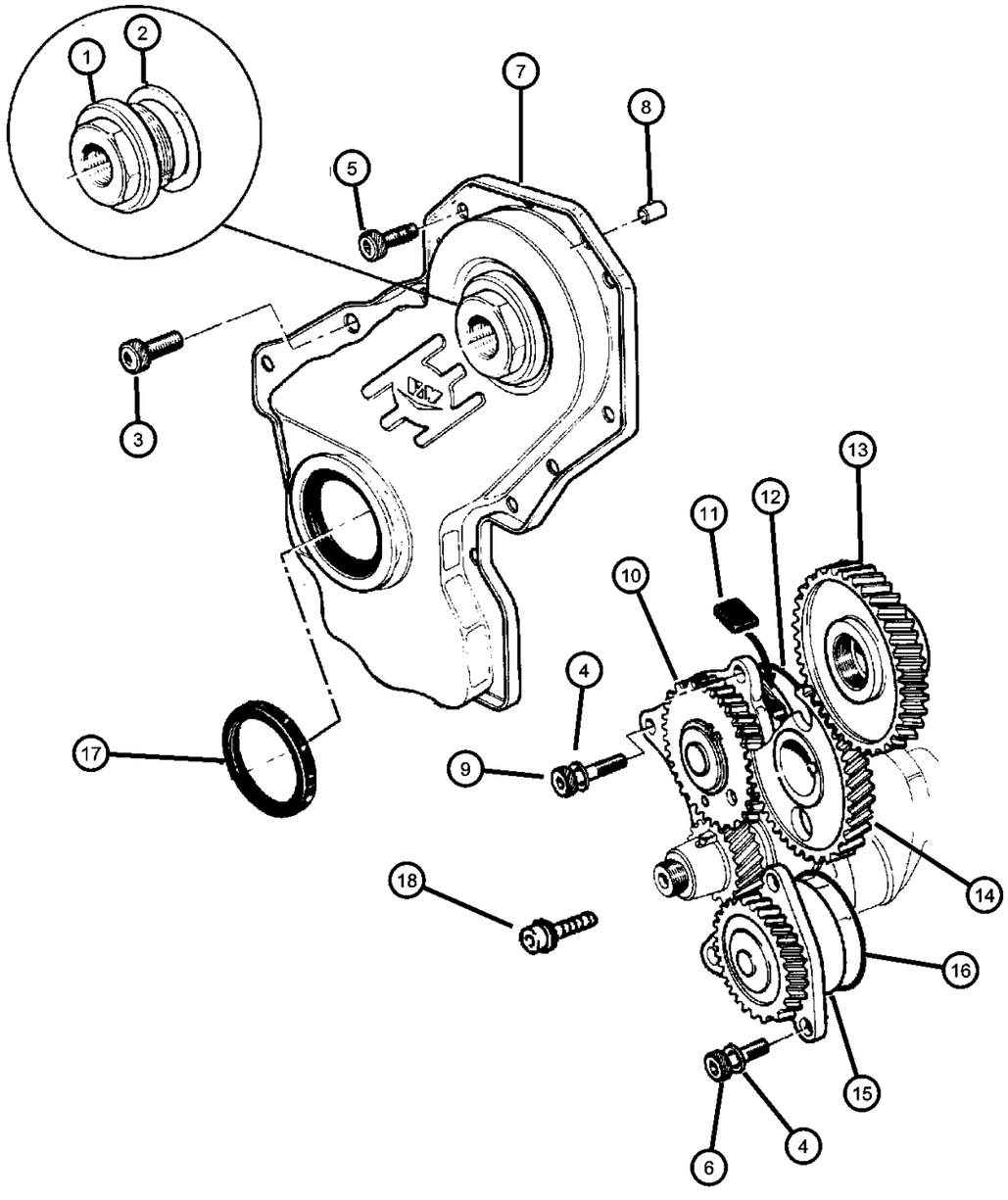

ITEM	PART NUMBER	QTY	LINE	SERIES	BODY	ENGINE	TRANS	TRIM	DESCRIPTION
NOTE: EN0=All 2.5L Diesel Engines									
1	04778951	1				EN0			COVER, Timing Belt
2	04720290	1				EN0			GASKET, Engine Oil Plug
3	04864559	23				EN0			SCREW
4	04720565	7				EN0			WASHER, Tube Bolt
5	04864550	20				EN0			SCREW
6	04720135	5				EN0			BOLT, Hex Head, M8x18
7	04864750AB	1				EN0			COVER, Timing Belt
8	04720304	2				EN0			DOWEL, Front Cover
9	04720136	4				EN0			BOLT, Hex Head, M8x20
10	04883421AA	1				EN0			PUMP, Vacuum
11	04797760	3				EN0			INSERT, Vacuum Pump Rotor
12	04778899	1				EN0			O RING
13	04882412	1				EN0			GEAR, Injection Pump
14	04882403	1				EN0			GEAR, Camshaft
15	04723233	1				EN0			PUMP, Engine Oil
16	04720239	1				EN0			O RING, Adaptor Plate
17	04720291	1				EN0			SEAL, Timing Belt Cover
18	04720291	1							BOLT, (NOT REQUIRED)

CHEROKEE (XJ)

SERIES	LINE	BODY	ENGINE	TRANSMISSION
L = LOWLINE	T = JEEP - 2WD B = JEEP - 2WD (RHD) J = JEEP - 4WD U = JEEP - 4WD (RHD)	72 = SPORT UTILITY 2-DR 74 = SPORT UTILITY 4-DR	ENC = 2.5L 4 Cyl Turbo Diesel Engine EPB = 2.5L 4 Cylinder Engine EPE = Engine - 2.5L Power Tech I-4 Cyl. ERH = 4.0L Power Tech I-6 Engine	DDQ = 5-Speed Manual Transmission DGS = 4-Speed Automatic AW4 Transmission DGO = ALL AUTOMATIC TRANSMISSIONS DBB = ALL MANUAL TRANSMISSIONS

Engine Oiling
Figure 2.5LD-710

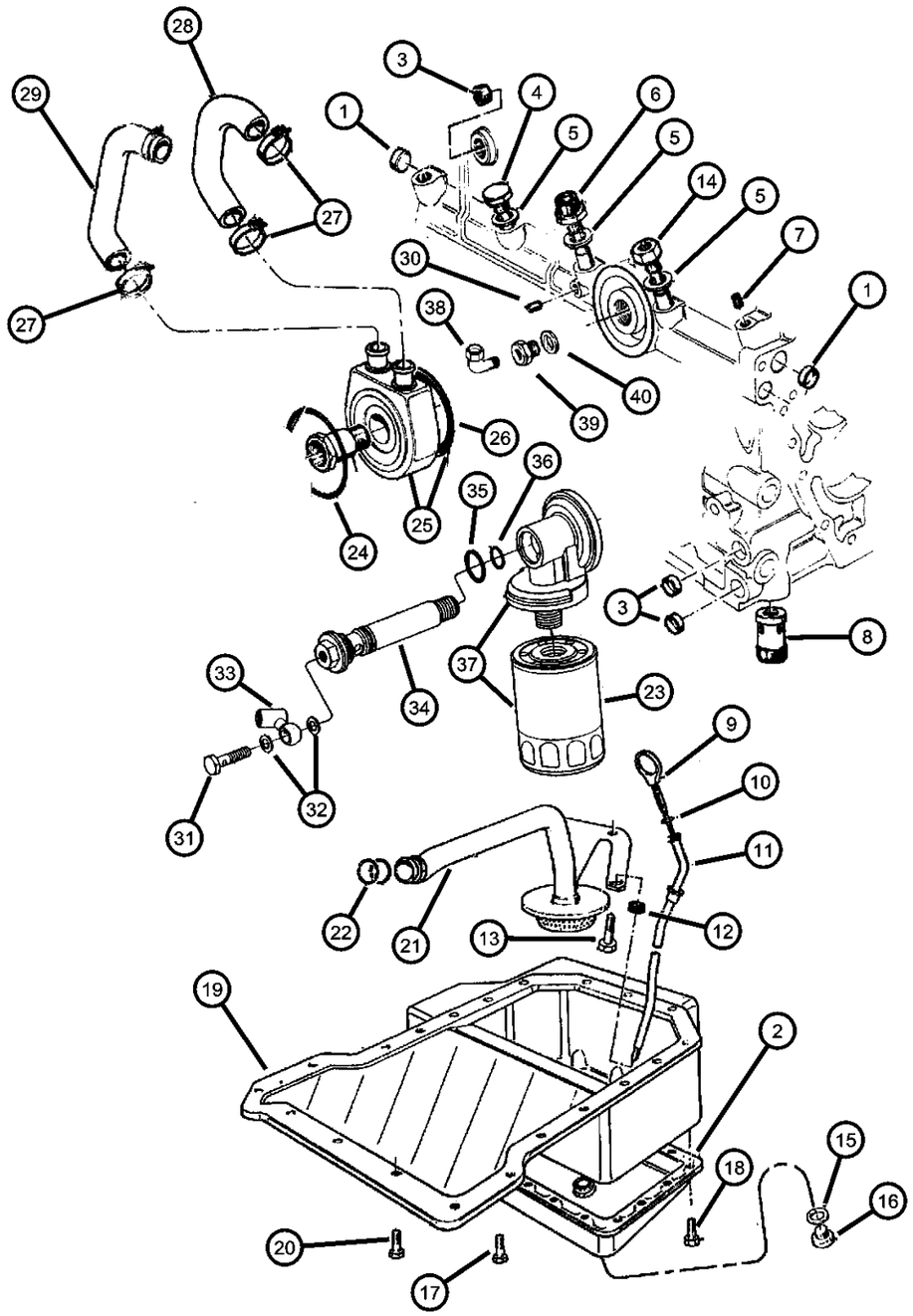

ITEM	PART NUMBER	QTY	LINE	SERIES	BODY	ENGINE	TRANS	TRIM	DESCRIPTION
NOTE: EN0=All 2.5L Diesel Engines									
1	04723211	2				EN0			PLUG, Cylinder Block Oil Hole
2	04778933	1				EN0			COVER, Oil Pump
3	04864577	2				EN0			PLUG
4	04720726	1				EN0			BOLT, Oil Feed To Turbo Adapter
5	04720704	5				EN0			WASHER, Oil Pressure Transduser
6	04720709	1				EN0			BOLT, Turbo Oil Feed Adapter
7	04883424AA	2				EN0			PLUG, Cylinder Block
8	04720217	1				EN0			VALVE, Oil Pressure Relief
9	04778947	1				EN0			INDICATOR, Engine Oil Level
10	04720373	1				EN0			O RING, Engine Oil Indicator
11	04882408	1				EN0			TUBE, Oil Gauge
12	04720362	2				EN0			GASKET, Engine Oil Indicator Pipe
13	04864550	20				EN0			SCREW
14	04778991	1				EN0			BOLT, Oil Feed To Turbo Adapter
15	04720353	1				EN0			WASHER, Plain
16	04720352	1				EN0			PLUG, Oil Drain
17	04864550	20				EN0			SCREW
18	04864559	23				EN0			SCREW
19	04778935	1				EN0			PAN, Engine Oil
20	04864551	22				EN0			SCREW
21	04778937	1				EN0			PICKUP, Engine Oil
22	04720374	2				EN0			O RING, Oil Suction Tube
23	04778838	1				EN0			FILTER, Engine Oil
24	04720375	1				EN0			O RING, Oil Filter Base
25	04720366	1				EN0			COOLER, Engine Oil
26	04723217	1				EN0			O RING, Oil Cooler
27	04883924AA	4				EN0			CLAMP, Heater Hose
28	04778987	1				EN0			HOSE, Oil Cooler
29	04778988	1				EN0			HOSE, Engine Oil Cooler
30	04883424AA	2				EN0			PLUG, Cylinder Block
31	04720367	3				EN0			BOLT, Banjo
32	04720703	11				EN0			WASHER, Plain

CHEROKEE (XJ)

SERIES	LINE	BODY	ENGINE	TRANSMISSION
L = LOWLINE	T = JEEP - 2WD B = JEEP - 2WD (RHD) J = JEEP - 4WD U = JEEP - 4WD (RHD)	72 = SPORT UTILITY 2-DR 74 = SPORT UTILITY 4-DR	ENC = 2.5L 4 Cyl Turbo Diesel Engine EPB = 2.5L 4 Cylinder Engine EPE = Engine - 2.5L Power Tech I-4 Cyl. ERH = 4.0L Power Tech I-6 Engine	DDQ = 5-Speed Manual Transmission DGS = 4-Speed Automatic AW4 Transmission DGO = ALL AUTOMATIC TRANSMISSIONS DBB = ALL MANUAL TRANSMISSIONS

AR = use ase required - = Non illustrrated part

Engine Oiling
Figure 2.5LD-710

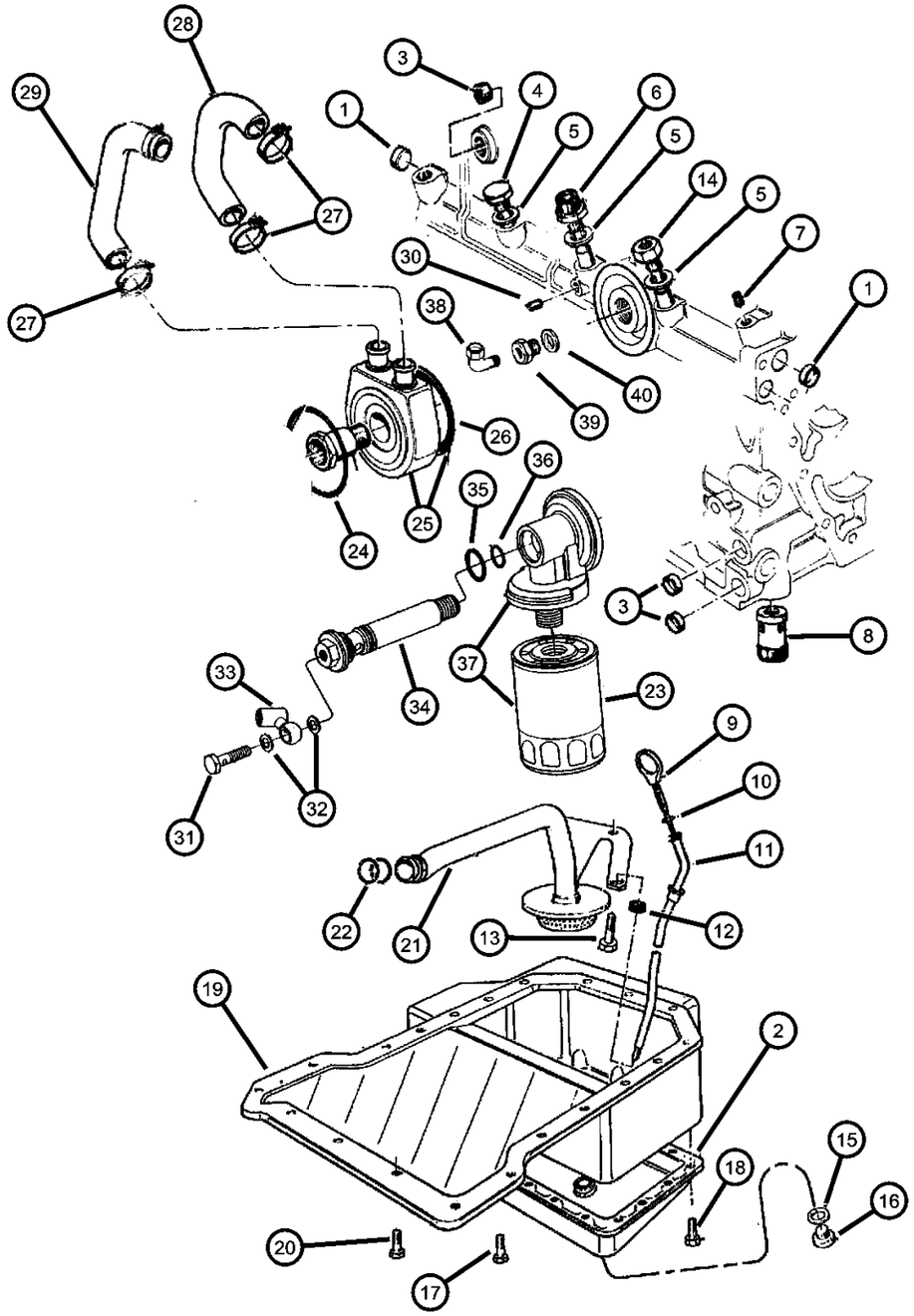

ITEM	PART NUMBER	QTY	LINE	SERIES	BODY	ENGINE	TRANS	TRIM	DESCRIPTION
33	04864744	1				EN0			BOLT, Banjo
34	04886304AA	1				EN0			ADAPTER, Oil Pressure Sender
35	04723334	2				EN0			GASKET, Valve
36	04886305AA	1				EN0			O RING, Oil Filter Adapter
37	04886306AA	1				EN0			BASE, Oil Filter
38	04886306AA	1							ADAPTER, Oil Pressure Sender, (NOT REQUIRED)
39	04886306AA	1							ADAPTER, Oil Pressure Sender, (NOT REQUIRED)
40	04886306AA	1							WASHER, Plain, 16.2x19.9x1.5, (NOT REQUIRED)

CHEROKEE (XJ)

SERIES	LINE	BODY	ENGINE	TRANSMISSION
L = LOWLINE	T = JEEP - 2WD B = JEEP - 2WD (RHD) J = JEEP - 4WD U = JEEP - 4WD (RHD)	72 = SPORT UTILITY 2-DR 74 = SPORT UTILITY 4-DR	ENC = 2.5L 4 Cyl Turbo Diesel Engine EPB = 2.5L 4 Cylinder Engine EPE = Engine - 2.5L Power Tech I-4 Cyl. ERH = 4.0L Power Tech I-6 Engine	DDQ = 5-Speed Manual Transmission DGS = 4-Speed Automatic AW4 Transmission DGO = ALL AUTOMATIC TRANSMISSIONS DBB = ALL MANUAL TRANSMISSIONS

Oil Lines
Figure 2.5LD-720

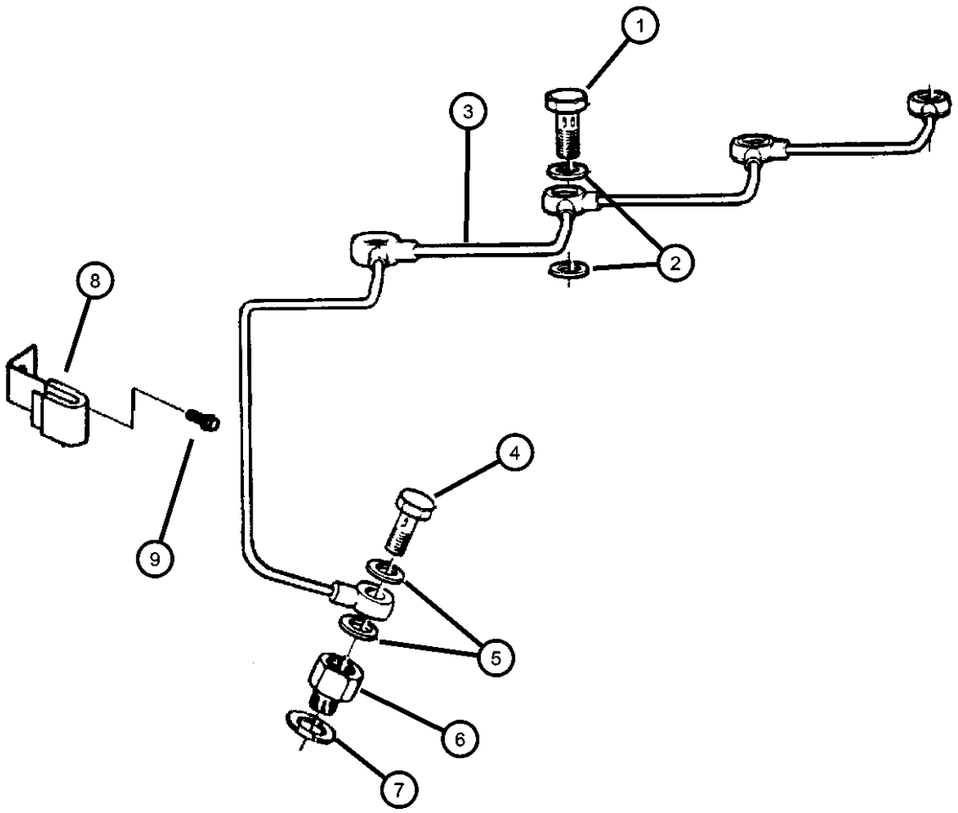

ITEM	PART NUMBER	QTY	LINE	SERIES	BODY	ENGINE	TRANS	TRIM	DESCRIPTION
NOTE: EN0=All 2.5L Diesel Engines									
1	04720358	6				EN0			BOLT, Banjo
2	04720554	12				EN0			WASHER, Banjo
3	04864023	1				EN0			TUBE, Oil Feed
4	04720358	6				EN0			BOLT, Banjo
5	04720554	12				EN0			WASHER, Banjo
6	04863777	1				EN0			UNION
7	04720704	5				EN0			WASHER, Oil Pressure Transduser
8	04720704	5							STIFFENER, Flywheel Housing, (NOT REQUIRED)
9	04720704	5							BOLT, M5x10, (NOT REQUIRED)

CHEROKEE (XJ)

SERIES	LINE	BODY	ENGINE	TRANSMISSION
L = LOWLINE	T = JEEP - 2WD B = JEEP - 2WD (RHD) J = JEEP - 4WD U = JEEP - 4WD (RHD)	72 = SPORT UTILITY 2-DR 74 = SPORT UTILITY 4-DR	ENC = 2.5L 4 Cyl Turbo Diesel Engine EPB = 2.5L 4 Cylinder Engine EPE = Engine - 2.5L Power Tech I-4 Cyl. ERH = 4.0L Power Tech I-6 Engine	DDQ = 5-Speed Manual Transmission DGS = 4-Speed Automatic AW4 Transmission DGO = ALL AUTOMATIC TRANSMISSIONS DBB = ALL MANUAL TRANSMISSIONS

Manifold, Intake and Exhaust
Figure 2.5LD-810

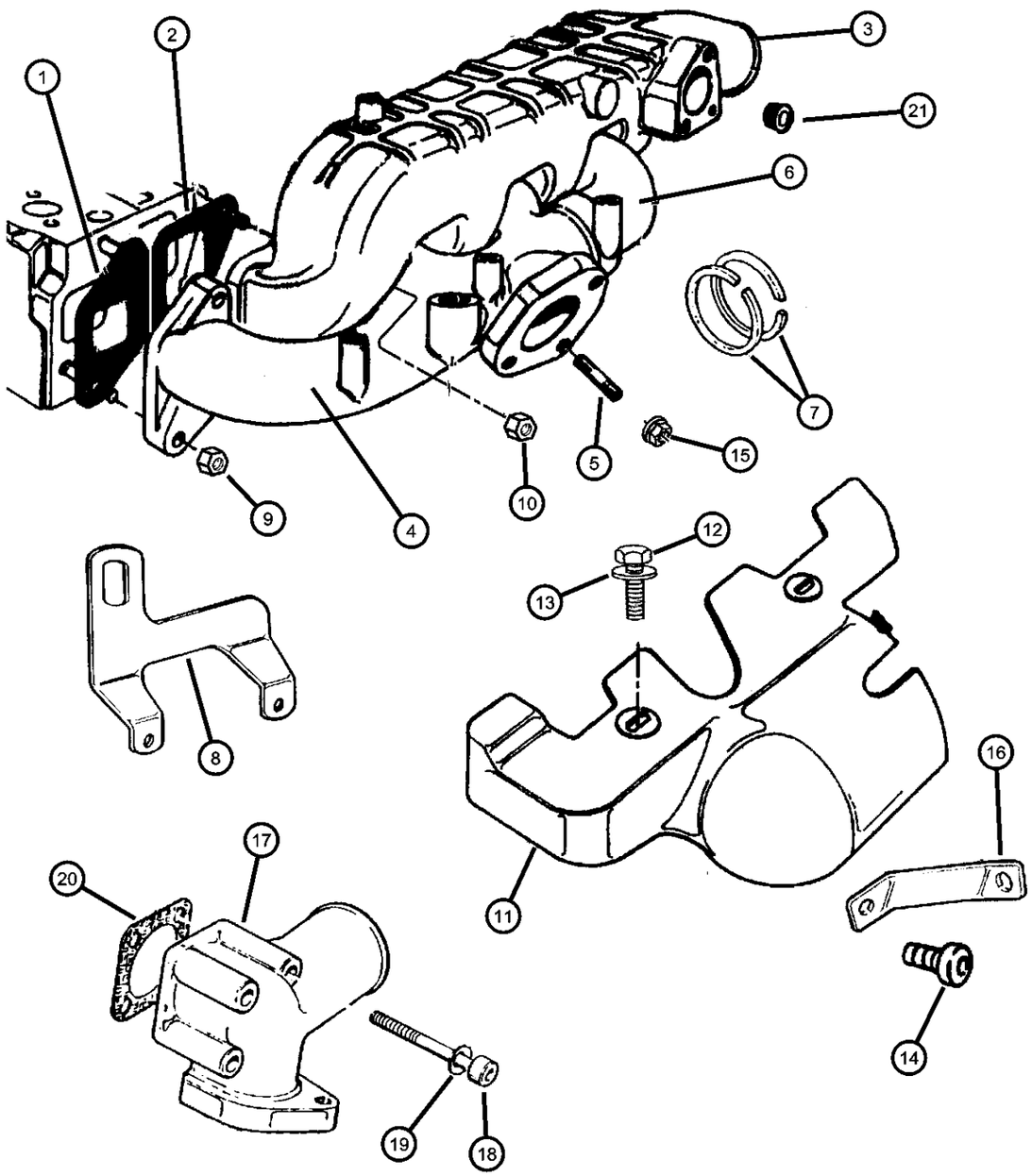

ITEM	PART NUMBER	QTY	LINE	SERIES	BODY	ENGINE	TRANS	TRIM	DESCRIPTION
NOTE: EN0=All 2.5L Diesel Engines									
1	04720204	4				EN0			GASKET, Intake/Exhaust Manifold
2	04720206	4				EN0			GASKET PACKAGE, Intake Manifold
3	04778959	1				EN0			MANIFOLD, Intake
4	04778957	1				EN0			MANIFOLD, Exhaust, Front
5	04741777	3				EN0			STUD, Turbo Elbow
6	04778960	1				EN0			MANIFOLD, Exhaust, Rear
7	04720214	2				EN0			CIRCLIP, Exhaust Manifold
8	04778954	1				EN0			BRACKET, Engine Lift
9	04798296	11				EN0			NUT, Lock
10	04778961	22				EN0			NUT
11	04864752	1				EN0			SHIELD, Heat
12	04728183	2				EN0			BOLT, Exhaust Shield
13	04723279	2				EN0			WASHER, Starter
14	04864550	20				EN0			BOLT, M6x10
15	04798296	11				EN0			NUT, Lock
16	04796396	1				EN0			BRACKET, Heat Shield
17	04778963	1				EN0			ELBOW, Intake Manifold Vacuum
18	04886291AA	4				EN0			BOLT, Water Manifold
19	04723204	8				EN0			WASHER, Implement Attaching
20	04720207	1				EN0			GASKET, Intake Connector
21	04720207	1							PLUG, (NOT REQUIRED)

CHEROKEE (XJ)

SERIES	LINE	BODY	ENGINE	TRANSMISSION
L = LOWLINE	T = JEEP - 2WD B = JEEP - 2WD (RHD) J = JEEP - 4WD U = JEEP - 4WD (RHD)	72 = SPORT UTILITY 2-DR 74 = SPORT UTILITY 4-DR	ENC = 2.5L 4 Cyl Turbo Diesel Engine EPB = 2.5L 4 Cylinder Engine EPE = Engine - 2.5L Power Tech I-4 Cyl. ERH = 4.0L Power Tech I-6 Engine	DDQ = 5-Speed Manual Transmission DGS = 4-Speed Automatic AW4 Transmission DGO = ALL AUTOMATIC TRANSMISSIONS DBB = ALL MANUAL TRANSMISSIONS

Crankcase Ventilation
Figure 2.5LD-910

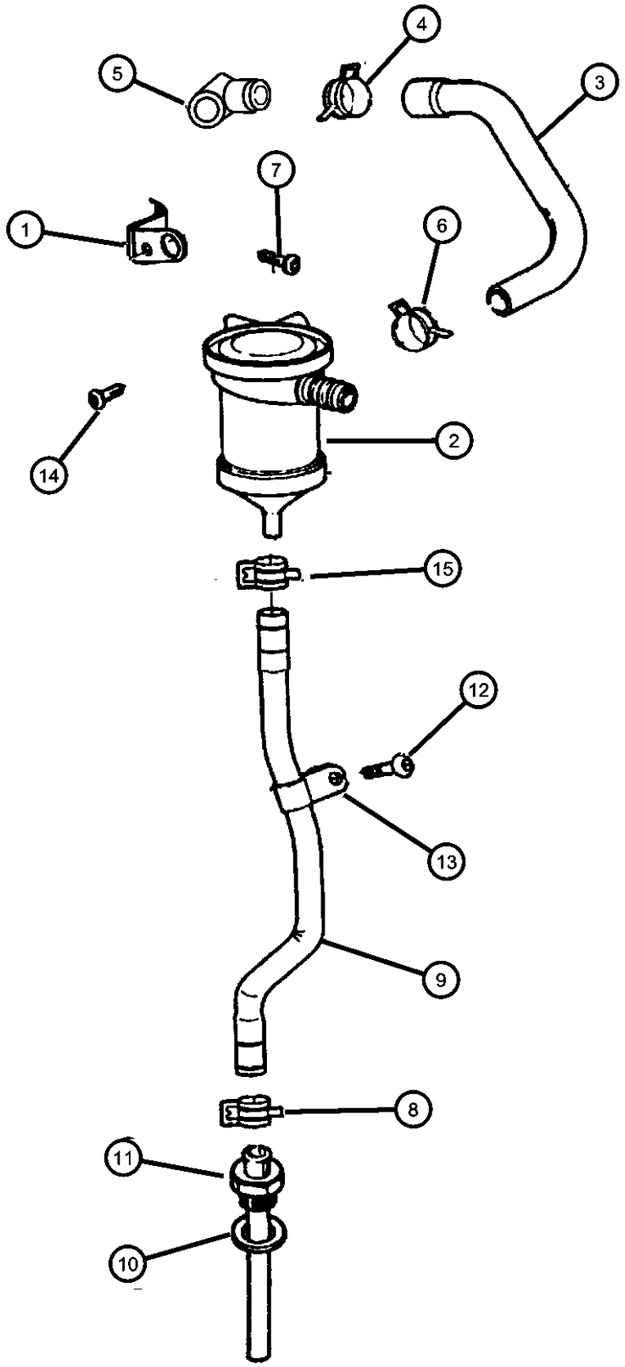

ITEM	PART NUMBER	QTY	LINE	SERIES	BODY	ENGINE	TRANS	TRIM	DESCRIPTION
NOTE: EN0=All 2.5L Diesel Engines									
1	04883452AA	1				EN0			BRACKET, Oil Seperator, Engine
2	04863796	1				EN0			SEPERATOR, Oil
3	04886290AA	1				EN0			PIPE, Oil Separator
4	04886044AA	1				EN0			CLAMP, Heater Hose
5	04720691	1				EN0			ADAPTER, Crankcase Vent
6	04883924AA	4				EN0			CLAMP, Heater Hose
7	04864550	20				EN0			SCREW
8	04886224AA	1				EN0			CLAMP, Oil Seperator Hose
9	04883454AA	1				EN0			TUBE, Oil Separator Drain
10	04720704	5				EN0			WASHER, Oil Pressure Transduser
11	04778942	1				EN0			ADAPTER, Oil Drain Pipe
12	04864559	23				EN0			SCREW
13	04886223AA	1				EN0			P CLIP
14	04864551	22				EN0			SCREW
15	04883924AA	4				EN0			CLAMP, Heater Hose

CHEROKEE (XJ)

SERIES	LINE	BODY	ENGINE	TRANSMISSION
L = LOWLINE	T = JEEP - 2WD B = JEEP - 2WD (RHD) J = JEEP - 4WD U = JEEP - 4WD (RHD)	72 = SPORT UTILITY 2-DR 74 = SPORT UTILITY 4-DR	ENC = 2.5L 4 Cyl Turbo Diesel Engine EPB = 2.5L 4 Cylinder Engine EPE = Engine - 2.5L Power Tech I-4 Cyl. ERH = 4.0L Power Tech I-6 Engine	DDQ = 5-Speed Manual Transmission DGS = 4-Speed Automatic AW4 Transmission DGO = ALL AUTOMATIC TRANSMISSIONS DBB = ALL MANUAL TRANSMISSIONS

Group - 11

Exhaust

011-100 Exhaust System 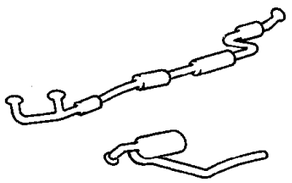	**011-200** Heat Shields 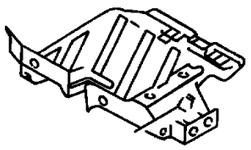		

Group - 11 Exhaust

Illustration Title — Group-Fig. No.

Exhaust System

Exhaust System ..... Fig. 11 - 120
Exhaust System ..... Fig. 11 - 140
Exhaust System ..... Fig. 11 - 145

Heat Shields

Heat Shields ..... Fig. 11 - 210

Exhaust System
Figure 11-120

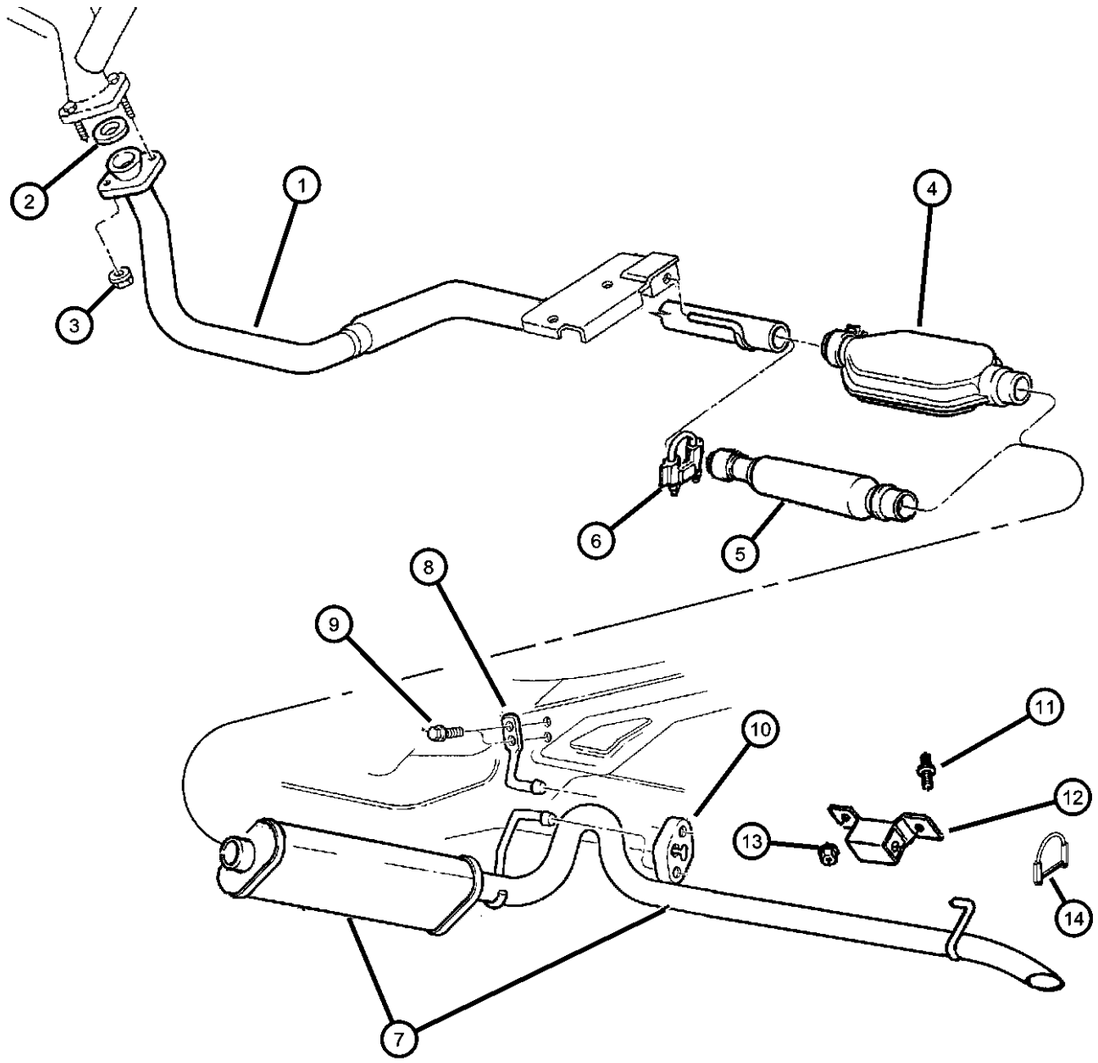

ITEM	PART NUMBER	QTY	LINE	SERIES	BODY	ENGINE	TRANS	TRIM	DESCRIPTION
NOTE: EP0=All 2.5L Gas Engines ER0=All 4.0L Engines DD0=All 5 Speed Manual Transmissions									
1									PIPE, Exhaust
	52020069	1				ER0			Emissions - Federal 4.0L
	52021047	1				EP0			2.5L
2	52005431	1				ER0			SEAL, Exhaust
3	J4005142	2				EP0, ER0			NUT, Hex Flange Lock
4									CONVERTER, Catalytic
	52019480	1				ER0			Federal
	52022019	1				ER0	DD0		California
	52101221	1				EP0			
5	52019500	1				EP0, ER0			RESONATOR, Exhaust
6	52018424	1							CLAMP, Exhaust
7									MUFFLER AND TAILPIPE, Exhaust
	52101051	1				ER0			
	52101052	1				EP0			
8	52002403	1							HANGER, Exhaust
9	J4001933	2							SCREW, Hex Flange Head, .312-x18x.875
10	52001759	1							INSULATOR, Exhaust
11	06504497	2							STUD, Collared, M12x1.75x62
12	52019543	1							BRACKET, Tailpipe
13	06100055	2							NUT AND WASHER, Hex Nut-Coned Washer, M12 x 1.75
14	06100055	2							CLAMP, Exhaust, (NOT REQUIRED)
-15									STUD, .375-16x1.69
	J4007109	2				EP0			
		2				ER0			

CHEROKEE (XJ)

SERIES	LINE	BODY	ENGINE	TRANSMISSION
L = LOWLINE	T = JEEP - 2WD B = JEEP - 2WD (RHD) J = JEEP - 4WD U = JEEP - 4WD (RHD)	72 = SPORT UTILITY 2-DR 74 = SPORT UTILITY 4-DR	ENC = 2.5L 4 Cyl Turbo Diesel Engine EPB = 2.5L 4 Cylinder Engine EPE = Engine - 2.5L Power Tech I-4 Cyl. ERH = 4.0L Power Tech I-6 Engine	DDQ = 5-Speed Manual Transmission DGS = 4-Speed Automatic AW4 Transmission DGO = ALL AUTOMATIC TRANSMISSIONS DBB = ALL MANUAL TRANSMISSIONS

Exhaust System
Figure 11-140

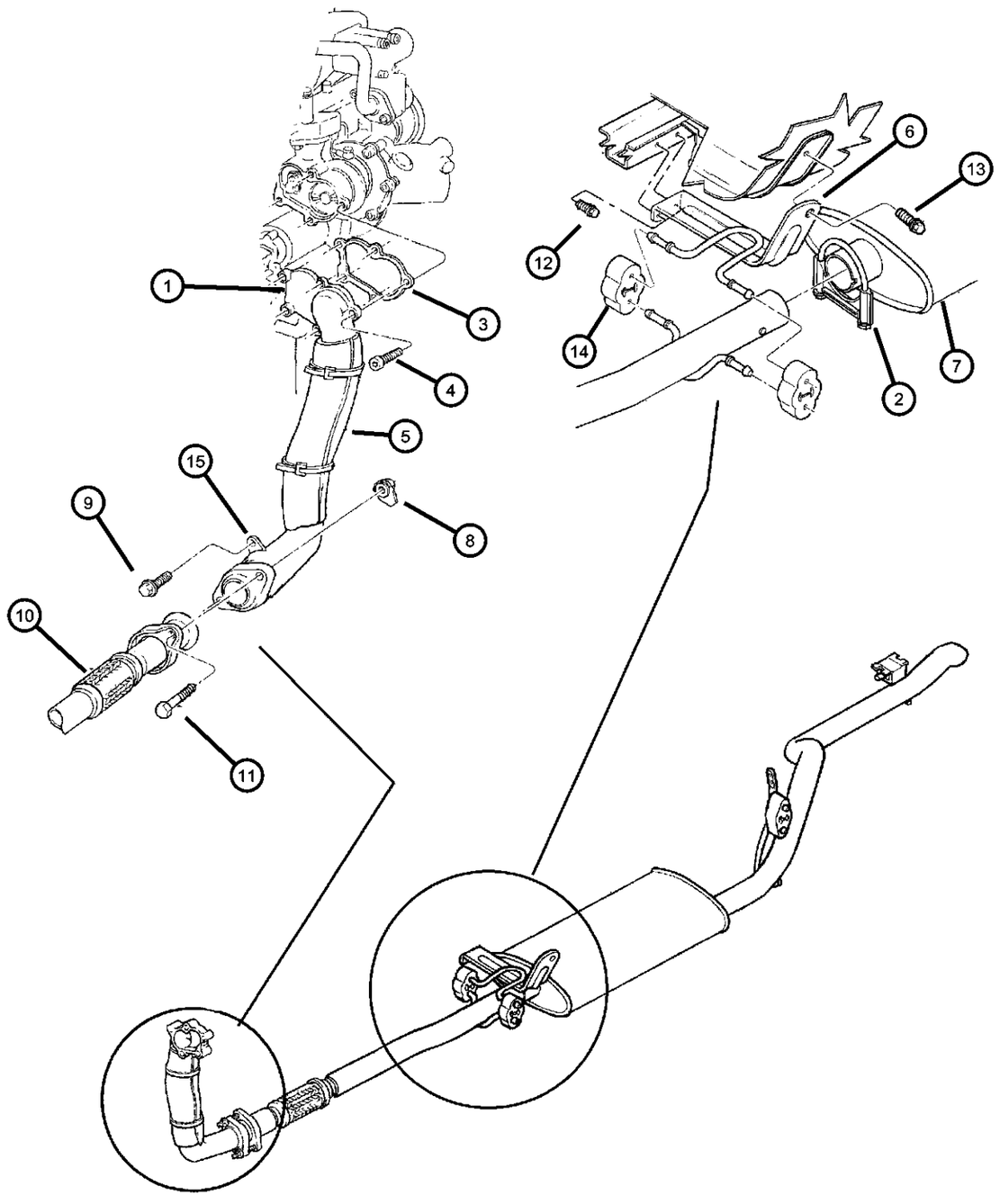

ITEM	PART NUMBER	QTY	LINE	SERIES	BODY	ENGINE	TRANS	TRIM	DESCRIPTION
NOTE: EN0=All 2.5L Diesel Engines									
1	52020276	1				ENC			ADAPTER, Turbo
2	52002144	1							CLAMP, Exhaust
3	52018875	1				EN0			GASKET, Turbo Adapter
4	06504070	5				ENC			SCREW, M8-1.25
5	52079405	1				EN0			SHIELD, Heat
6	52101056	1				EN0			HANGER, Muffler
7	52101063	1				EN0			MUFFLER AND TAILPIPE, Exhaust
8	06031959	3				EN0			NUT, Hex Flange Lock
9	J4001933	2							SCREW, Hex Flange Head, .312-x18x.875
10	52101111	1				EN0			PIPE, Exhaust
11	06034501	3				EN0			SCREW, Hex Head Header Point, .375-16x1.375
12	06101786	2				EP0			SCREW, Self Tapping, M6x1x15
13	06100574	1				EN0			BOLT AND CONED WASHER, Hex Head, M8x20x17
14	52017607	2				EN0			INSULATOR, Exhaust
15	52018818AB	1				EN0			FLANGE, Exhaust Pipe

CHEROKEE (XJ)

SERIES	LINE	BODY	ENGINE	TRANSMISSION
L = LOWLINE	T = JEEP - 2WD B = JEEP - 2WD (RHD) J = JEEP - 4WD U = JEEP - 4WD (RHD)	72 = SPORT UTILITY 2-DR 74 = SPORT UTILITY 4-DR	ENC = 2.5L 4 Cyl Turbo Diesel Engine EPB = 2.5L 4 Cylinder Engine EPE = Engine - 2.5L Power Tech I-4 Cyl. ERH = 4.0L Power Tech I-6 Engine	DDQ = 5-Speed Manual Transmission DGS = 4-Speed Automatic AW4 Transmission DGO = ALL AUTOMATIC TRANSMISSIONS DBB = ALL MANUAL TRANSMISSIONS

Exhaust System
Figure 11-145

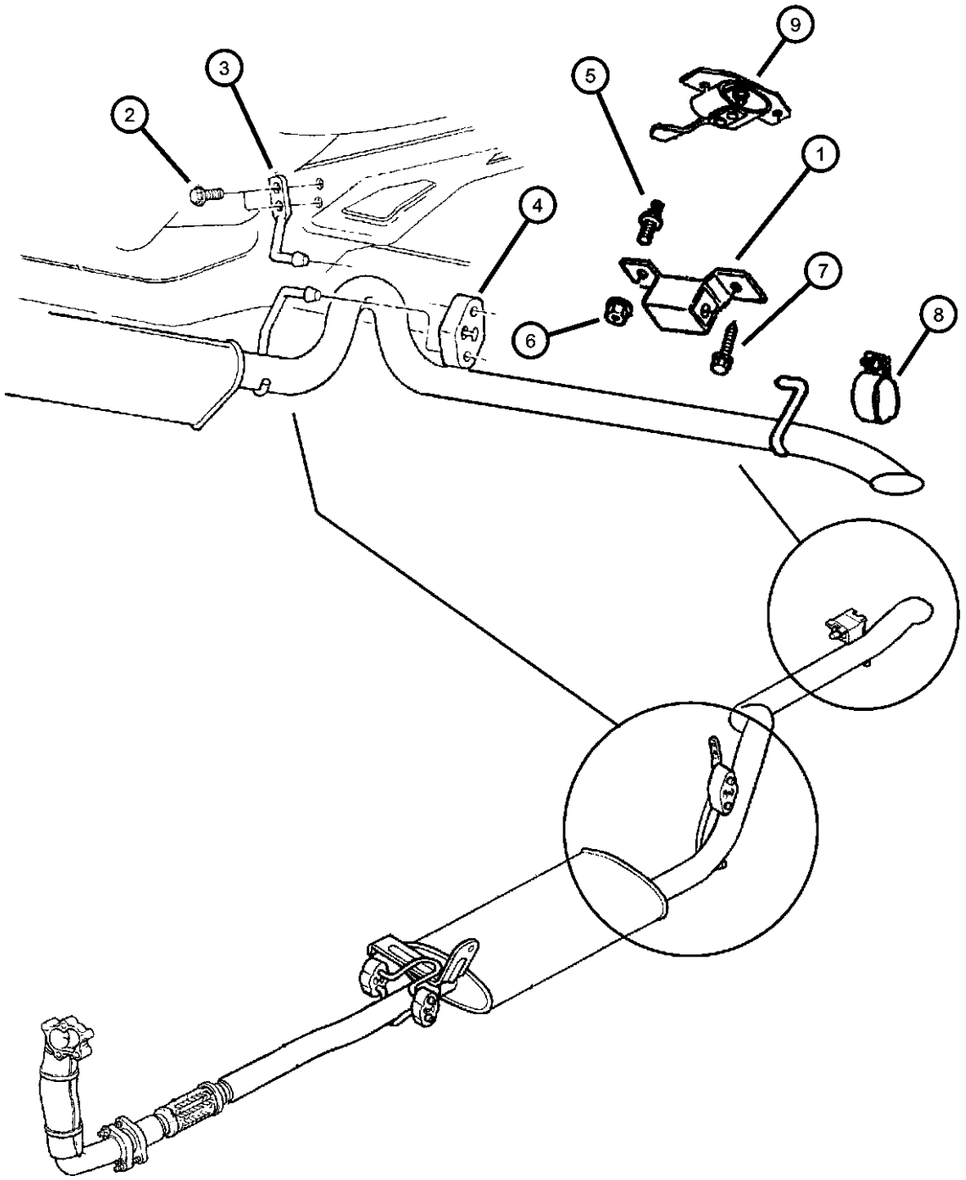

ITEM	PART NUMBER	QTY	LINE	SERIES	BODY	ENGINE	TRANS	TRIM	DESCRIPTION
1	52019543AB	1							BRACKET, Tailpipe
2	J4200402	4							SCREW, Hex Flange Head, M8x1.25x30
3	52002403	1							HANGER, Exhaust
4	52001759	1							INSULATOR, Exhaust
5	06504497	2							STUD, Collared, M12x1.75x62
6	06100055	2							NUT AND WASHER, Hex Nut-Coned Washer, M12 x 1.75
7	06100055	2							BOLT, Hex Flange Head, M12x1.75x40, (NOT REQUIRED)
8	06100055	2							CLAMP, Exhaust, (NOT REQUIRED)
9	06100055	2							HANGER, Tailpipe, (NOT REQUIRED)

CHEROKEE (XJ)

SERIES	LINE	BODY	ENGINE	TRANSMISSION
L = LOWLINE	T = JEEP - 2WD B = JEEP - 2WD (RHD) J = JEEP - 4WD U = JEEP - 4WD (RHD)	72 = SPORT UTILITY 2-DR 74 = SPORT UTILITY 4-DR	ENC = 2.5L 4 Cyl Turbo Diesel Engine EPB = 2.5L 4 Cylinder Engine EPE = Engine - 2.5L Power Tech I-4 Cyl. ERH = 4.0L Power Tech I-6 Engine	DDQ = 5-Speed Manual Transmission DGS = 4-Speed Automatic AW4 Transmission DGO = ALL AUTOMATIC TRANSMISSIONS DBB = ALL MANUAL TRANSMISSIONS

Heat Shields
Figure 11-210

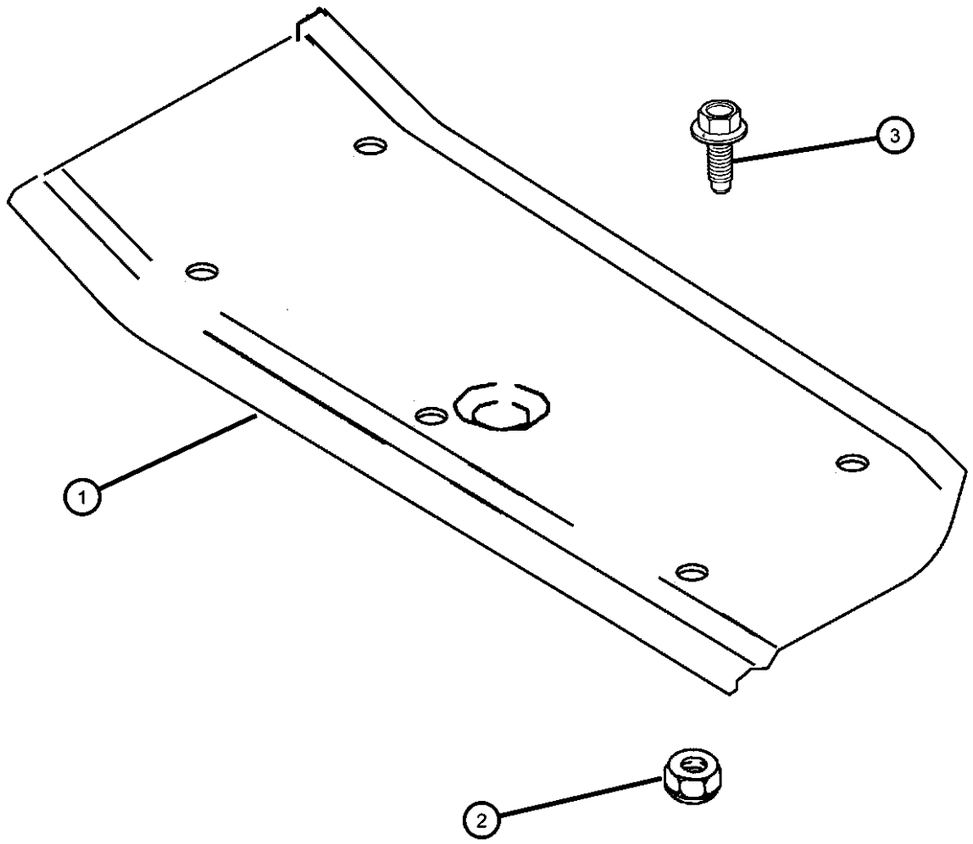

ITEM	PART NUMBER	QTY	LINE	SERIES	BODY	ENGINE	TRANS	TRIM	DESCRIPTION
NOTE: EP0=All 2.5L Engines ER0=All 4.0L Engines									
1	55235811	1				EP0, ER0			SHIELD, Muffler
2	J0120375	5				EP0, ER0			NUT, Hex, .250-20
3	J0120375	5							SCREW, (NOT SERVICED)

CHEROKEE (XJ)

SERIES	LINE	BODY	ENGINE	TRANSMISSION
L = LOWLINE	T = JEEP - 2WD B = JEEP - 2WD (RHD) J = JEEP - 4WD U = JEEP - 4WD (RHD)	72 = SPORT UTILITY 2-DR 74 = SPORT UTILITY 4-DR	ENC = 2.5L 4 Cyl Turbo Diesel Engine EPB = 2.5L 4 Cylinder Engine EPE = Engine - 2.5L Power Tech I-4 Cyl. ERH = 4.0L Power Tech I-6 Engine	DDQ = 5-Speed Manual Transmission DGS = 4-Speed Automatic AW4 Transmission DGO = ALL AUTOMATIC TRANSMISSIONS DBB = ALL MANUAL TRANSMISSIONS

Group - 13

Frames and Bumpers

013-200 Front Bumper and Fascia 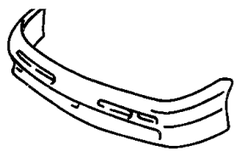	**013-300** Rear Bumper and Fascia 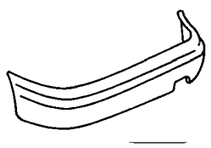	**013-600** Trailer Tow 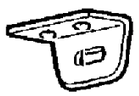	

Group - 13 Frames and Bumpers

Illustration Title — Group-Fig. No.

Front Bumper and Fascia
Bumper, Front ..... Fig. 13 - 210

Rear Bumper and Fascia
Bumper, Rear ..... Fig. 13 - 310

Trailer Tow
Hitch, Trailer Tow ..... Fig. 13 - 610
Tow Hook and Tow Eye ..... Fig. 13 - 615

Bumper, Front
Figure 13-210

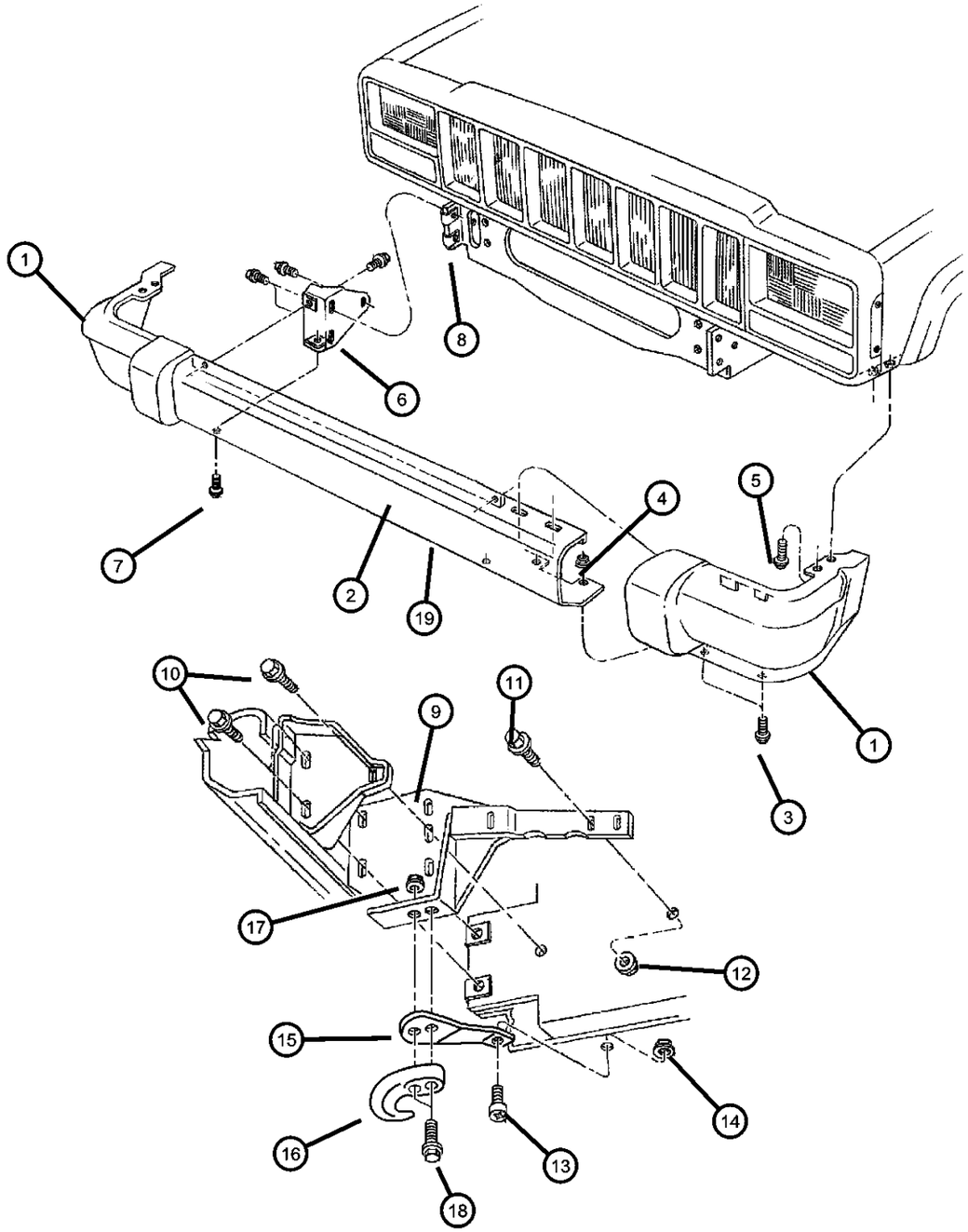

ITEM	PART NUMBER	QTY	LINE	SERIES	BODY	ENGINE	TRANS	TRIM	DESCRIPTION
Note: Sales Code MPB = Bumper, Front Body Color									
1									END CAP, Bumper
	5DY00DX8	1							[X8], Right
	5DY00PCJ	1							[CJ], Right
	5DY00PR4	1							[R4], Right
	5DY00RJN	1							[JN], Right
	5DY00SW1	1							[W1], Right
	5DY00TQ7	1							[Q7], Right
	5DY01DX8	1							[X8] [MBP], Left
	5DY01PCJ	1							[CJ], Left
	5DY01PR4	1							[R4], Left
	5DY01RJN	1							[JN], Left
	5DY01SW1	1							[W1], Left
	5DY01TQ7	1							[Q7], Left
	5DY40DX9	1							Black/Black [MB1], Right
	5DY41DX9	1							Black/Black [MB1], Left
2									BAR, Bumper Front - Painted
	5EE85DX8AB	1							[X8]
	5EE85PCJAB	1							[CJ]
	5EE85PR4AB	1							[R4]
	5EE85RJNAB	1							[JN]
	5EE85S3XAB	1							Semi Gloss Black, w/o Matching Body Color
	5EE85SW1AB	1							[W1]
	5EE85TQ7AB	1							[Q7]
3	06100548	4							BOLT AND CONED WASHER, Hex Head, M6x20x12.5
4	06101694	4							NUT, M6x1.00
5	06504249	4							SCREW, Hex Head, M6x1x20
6									BRACKET, Bumper
	55175268AB	1							Right
	55175269AB	1							Left
7	11500662	4							NUT, U Type, M10 x 1.50
8	34201540	8							BOLT AND WASHER, Implement Attaching

CHEROKEE (XJ)

SERIES	LINE	BODY	ENGINE	TRANSMISSION
L = LOWLINE	T = JEEP - 2WD B = JEEP - 2WD (RHD) J = JEEP - 4WD U = JEEP - 4WD (RHD)	72 = SPORT UTILITY 2-DR 74 = SPORT UTILITY 4-DR	ENC = 2.5L 4 Cyl Turbo Diesel Engine EPB = 2.5L 4 Cylinder Engine EPE = Engine - 2.5L Power Tech I-4 Cyl. ERH = 4.0L Power Tech I-6 Engine	DDQ = 5-Speed Manual Transmission DGS = 4-Speed Automatic AW4 Transmission DGO = ALL AUTOMATIC TRANSMISSIONS DBB = ALL MANUAL TRANSMISSIONS

Bumper, Front
Figure 13-210

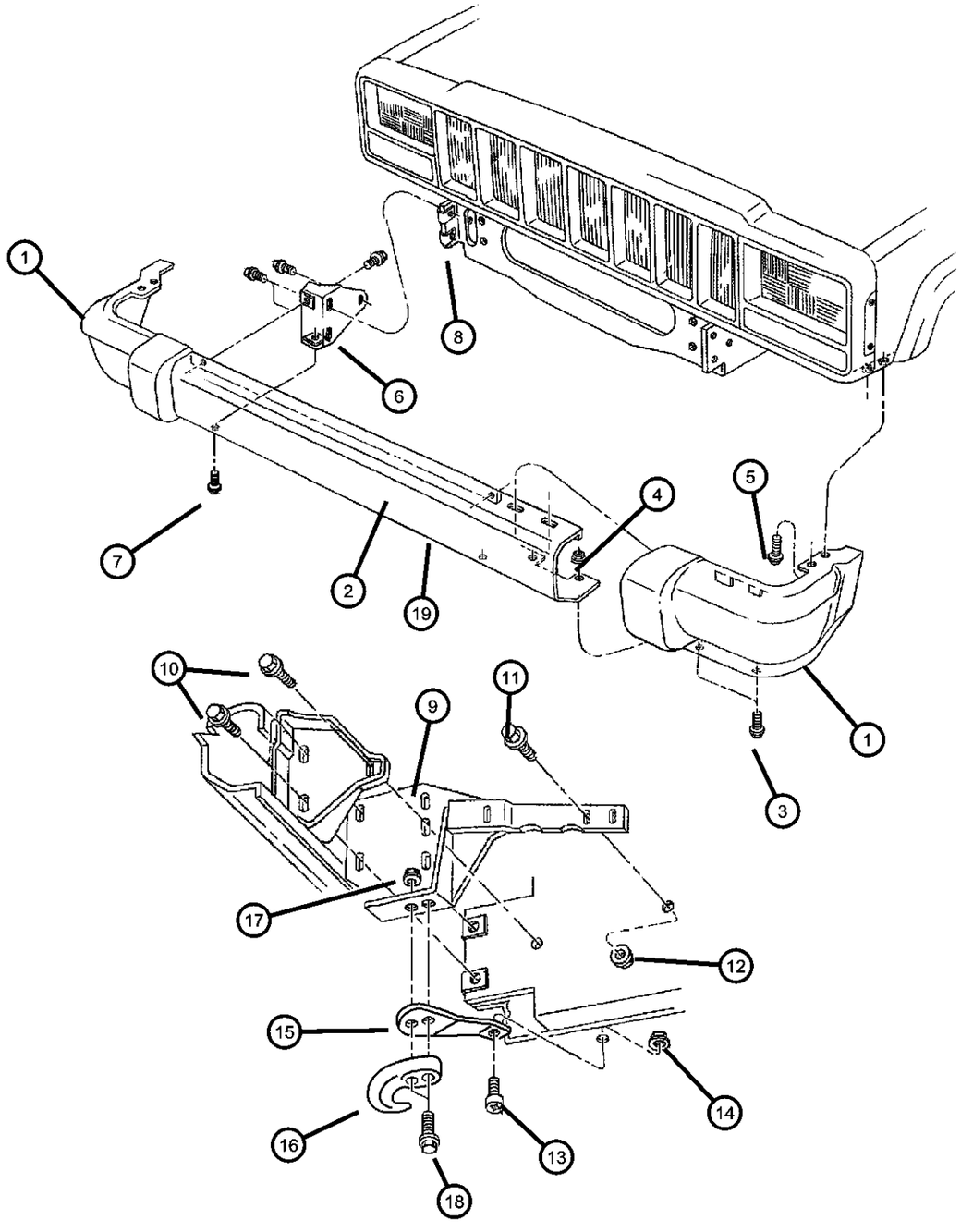

ITEM	PART NUMBER	QTY	LINE	SERIES	BODY	ENGINE	TRANS	TRIM	DESCRIPTION
9									BRACKET, Front Bumper
	55155096	1							Right
	55155097	1							Left
10	34202219	4							BOLT AND WASHER, Hex Head
11	34202388	1							BOLT, Button Head Torx, M14 x 2.0 x 80
12	06502698	1							NUT
13	J4200434	4							BOLT, Hex Head, M10x1.50x20
14	06502135	4							NUT, Hex Flange, M10x1.5
15									BRACE, Tow Hook
	52001972	1							Right
	52001973	1							Left
16	52057999AB	2							HOOK, Tow
17	06502697	4							NUT, Hex Flange Lock, M12x1.75
18	06504910AA	4							BOLT, Hex Flange Head, M12x1.75x87.50
19									DEFLECTOR, Air
	5EF08DX9	1							
	5EP04SW1	1							Paint as Required
-20	06035944AA	3							RIVET
-21	52003479	1							BRACKET, License Plate

CHEROKEE (XJ)

SERIES	LINE	BODY	ENGINE	TRANSMISSION
L = LOWLINE	T = JEEP - 2WD B = JEEP - 2WD (RHD) J = JEEP - 4WD U = JEEP - 4WD (RHD)	72 = SPORT UTILITY 2-DR 74 = SPORT UTILITY 4-DR	ENC = 2.5L 4 Cyl Turbo Diesel Engine EPB = 2.5L 4 Cylinder Engine EPE = Engine - 2.5L Power Tech I-4 Cyl. ERH = 4.0L Power Tech I-6 Engine	DDQ = 5-Speed Manual Transmission DGS = 4-Speed Automatic AW4 Transmission DGO = ALL AUTOMATIC TRANSMISSIONS DBB = ALL MANUAL TRANSMISSIONS

Bumper, Rear
Figure 13-310

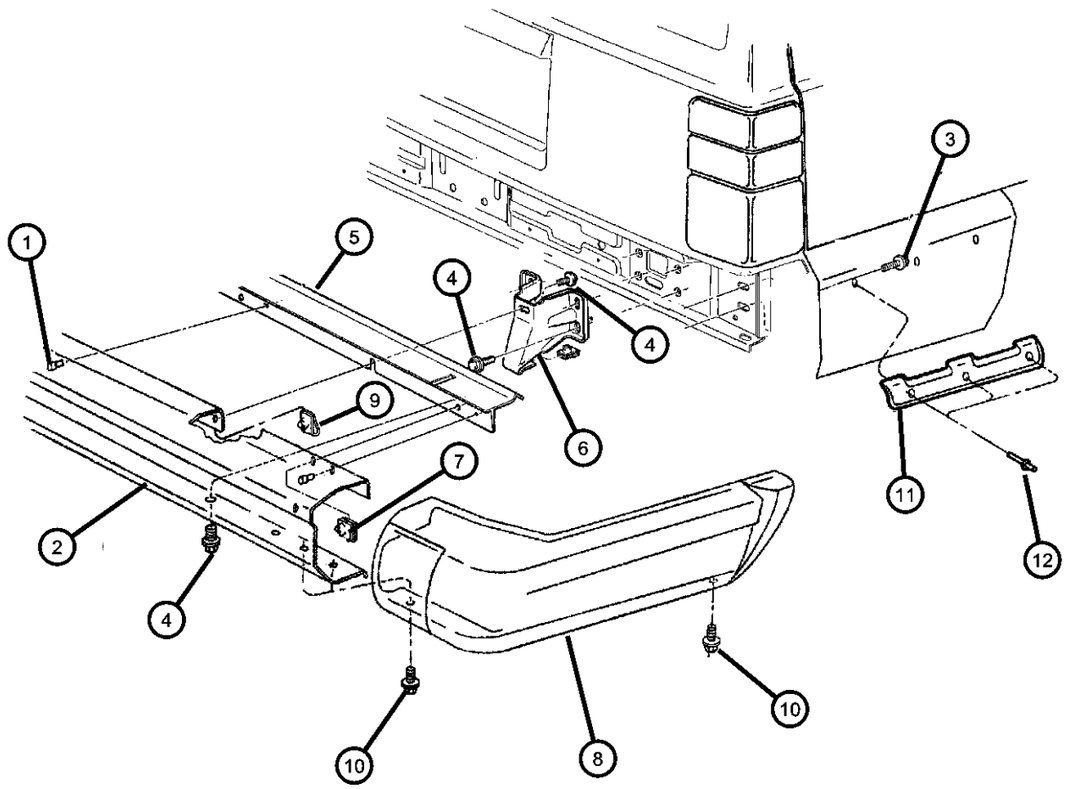

ITEM	PART NUMBER	QTY	LINE	SERIES	BODY	ENGINE	TRANS	TRIM	DESCRIPTION
1	34202855	4							RIVET, M5x20.00 Plastic
2									BUMPER, Rear
	5EE84DX8	1							Black
	5EE84JX8	1							Black/Black
	5EE84PCJ	1							Montego Blue
	5EE84PR4	1							Red
	5EE84RJN	1							Green
	5EE84SW1	1							White
	5EE84TQ7	1							Aquamarine Blue
3	34202467	4							SCREW, Hex Head, M8x1.25x30
4	34201540	8							BOLT AND WASHER, Implement Attaching
5	55026542	1							SHIELD, Bumper
6	55175261AB	2							BRACKET, Bumper
7	06101283	2							U-NUT, M8x1.25
8									END CAP, Bumper
	5DY08DX8	1							Black, Right
	5DY08PCJ	1							Montego Blue, Right
	5DY08PR4	1							Red, Right
	5DY08RJN	1							Green, Right
	5DY08SW1	1							White, Right
	5DY08TQ7	1							Gunmetal, Right
	5DY09DX8	1							Black, Left
	5DY09PCJ	1							Montego Blue, Left
	5DY09PR4	1							Red, Left
	5DY09RJN	1							Green, Left
	5DY09SW1	1							White, Left
	5DY09TQ7	1							Gunmetal, Left
	5DY10DX9	1							Flat Black, Right
	5DY11DX9	1							Flat Black, Left
9	11500662	2							NUT, U Type, M10 x 1.50
10	06101455	2							SCREW AND WASHER, Hex Head, M6x1x20
11									BRACKET

CHEROKEE (XJ)

SERIES	LINE	BODY	ENGINE	TRANSMISSION
L = LOWLINE	T = JEEP - 2WD B = JEEP - 2WD (RHD) J = JEEP - 4WD U = JEEP - 4WD (RHD)	72 = SPORT UTILITY 2-DR 74 = SPORT UTILITY 4-DR	ENC = 2.5L 4 Cyl Turbo Diesel Engine EPB = 2.5L 4 Cylinder Engine EPE = Engine - 2.5L Power Tech I-4 Cyl. ERH = 4.0L Power Tech I-6 Engine	DDQ = 5-Speed Manual Transmission DGS = 4-Speed Automatic AW4 Transmission DGO = ALL AUTOMATIC TRANSMISSIONS DBB = ALL MANUAL TRANSMISSIONS

Bumper, Rear
Figure 13-310

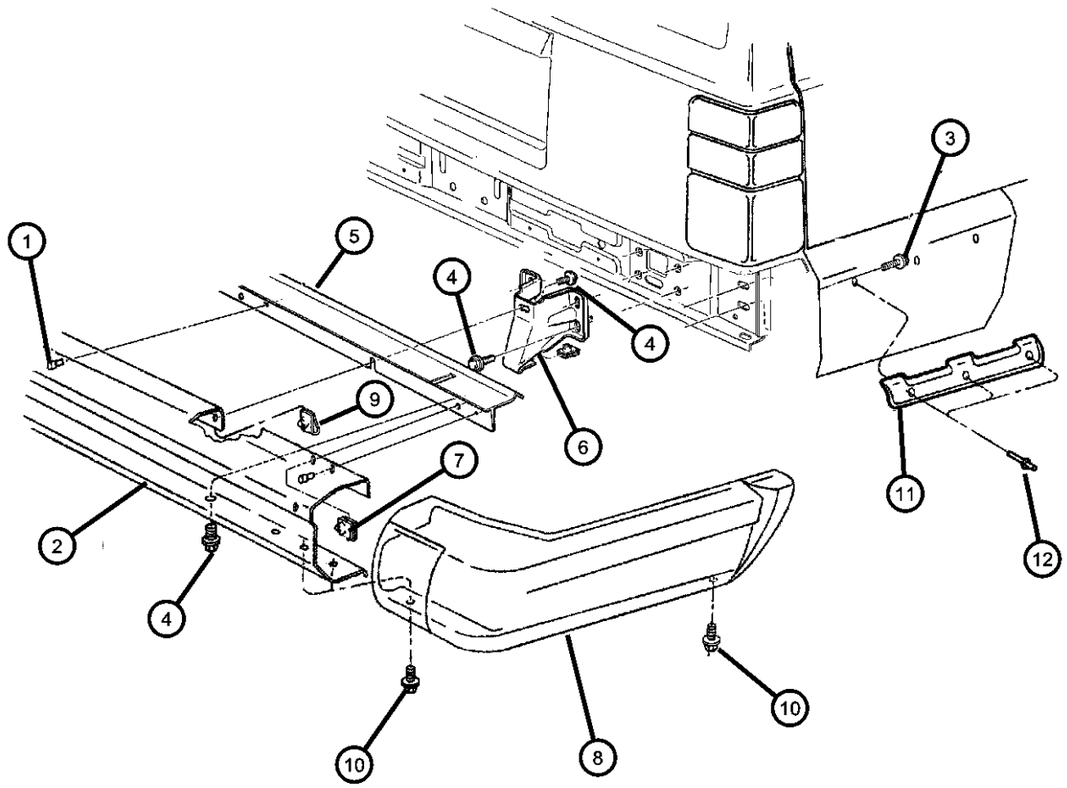

ITEM	PART NUMBER	QTY	LINE	SERIES	BODY	ENGINE	TRANS	TRIM	DESCRIPTION
	55175692	1							Right
	55175693	1							Left
12	06035122	6							RIVET, .187x.70 Black

CHEROKEE (XJ)

SERIES	LINE	BODY	ENGINE	TRANSMISSION
L = LOWLINE	T = JEEP - 2WD B = JEEP - 2WD (RHD) J = JEEP - 4WD U = JEEP - 4WD (RHD)	72 = SPORT UTILITY 2-DR 74 = SPORT UTILITY 4-DR	ENC = 2.5L 4 Cyl Turbo Diesel Engine EPB = 2.5L 4 Cylinder Engine EPE = Engine - 2.5L Power Tech I-4 Cyl. ERH = 4.0L Power Tech I-6 Engine	DDQ = 5-Speed Manual Transmission DGS = 4-Speed Automatic AW4 Transmission DGO = ALL AUTOMATIC TRANSMISSIONS DBB = ALL MANUAL TRANSMISSIONS

Hitch, Trailer Tow
Figure 13-610

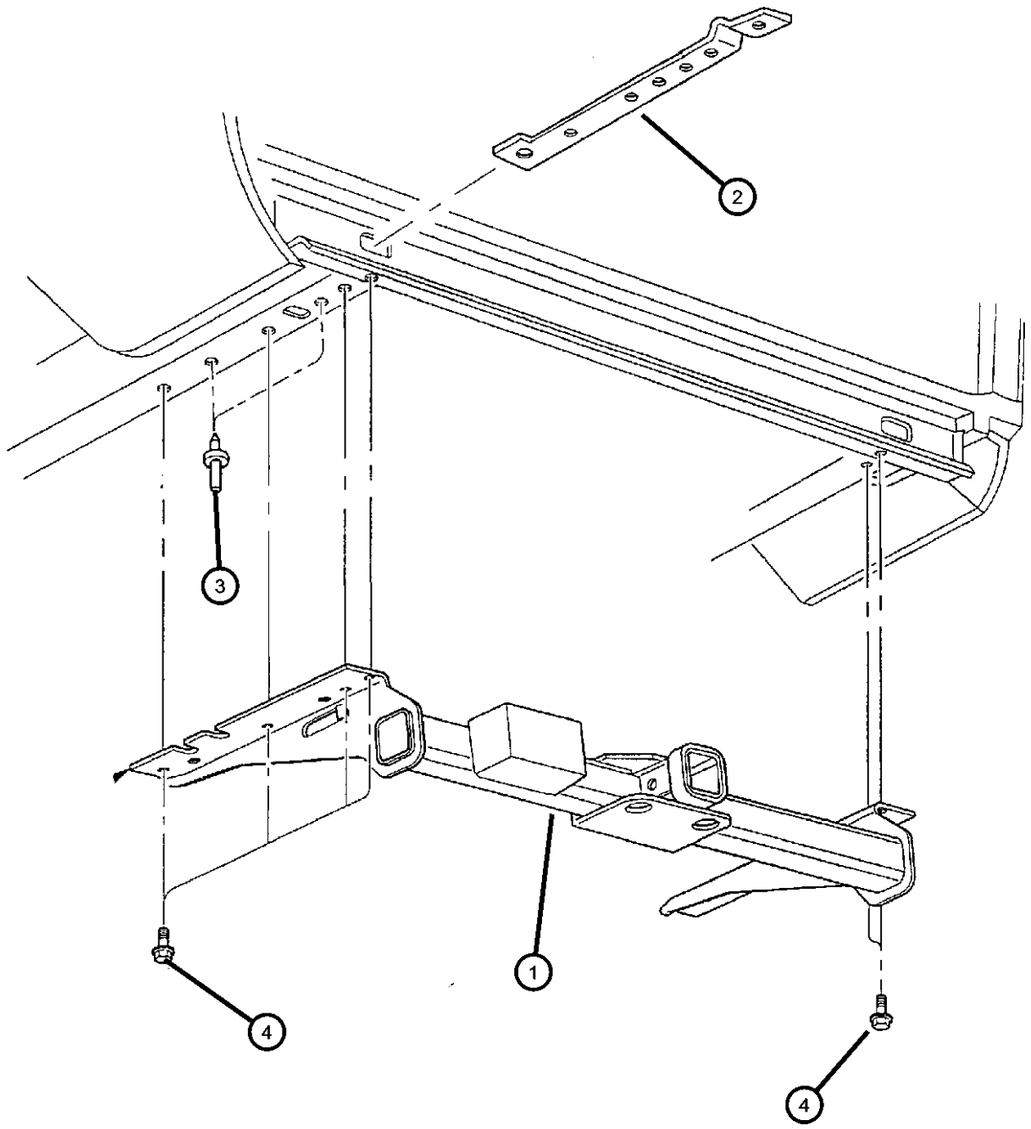

ITEM	PART NUMBER	QTY	LINE	SERIES	BODY	ENGINE	TRANS	TRIM	DESCRIPTION
1	52058266	1							HITCH, Trailer
2									REINFORCEMENT, Sill
	52001174	1							Right
	52001175	1							Left
3	34201353	4							RIVET, M6.3x14.02
4	34201964	6							BOLT, Hex Flange Head, M12x1.75x40

CHEROKEE (XJ)

SERIES	LINE	BODY	ENGINE	TRANSMISSION
L = LOWLINE	T = JEEP - 2WD B = JEEP - 2WD (RHD) J = JEEP - 4WD U = JEEP - 4WD (RHD)	72 = SPORT UTILITY 2-DR 74 = SPORT UTILITY 4-DR	ENC = 2.5L 4 Cyl Turbo Diesel Engine EPB = 2.5L 4 Cylinder Engine EPE = Engine - 2.5L Power Tech I-4 Cyl. ERH = 4.0L Power Tech I-6 Engine	DDQ = 5-Speed Manual Transmission DGS = 4-Speed Automatic AW4 Transmission DGO = ALL AUTOMATIC TRANSMISSIONS DBB = ALL MANUAL TRANSMISSIONS

AR = use ase required - = Non illustrrated part

Tow Hook and Tow Eye
Figure 13-615

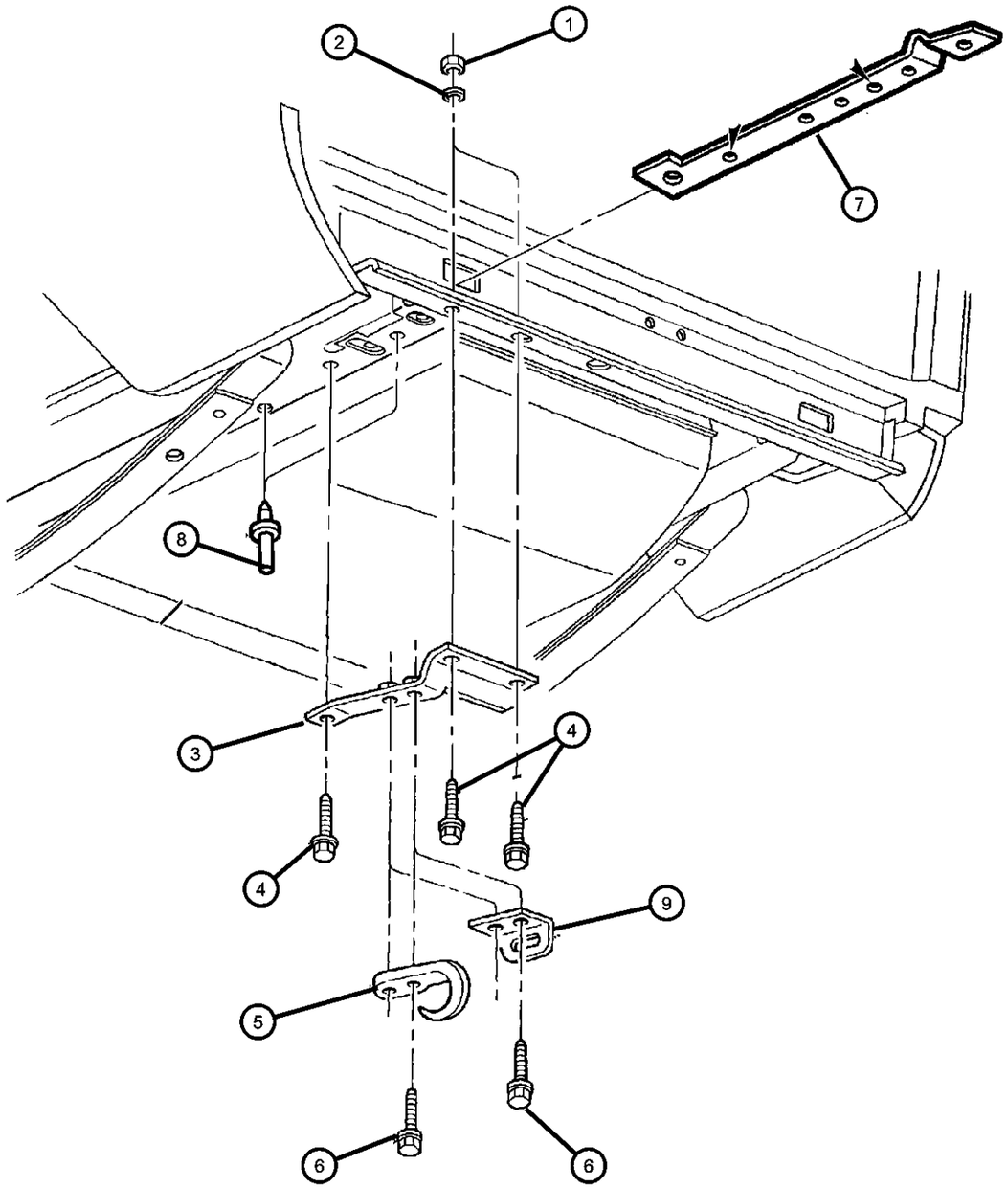

ITEM	PART NUMBER	QTY	LINE	SERIES	BODY	ENGINE	TRANS	TRIM	DESCRIPTION
Note: Sales Code ER0 = 4.0L Engine									
1	11501060	2							NUT, Hex, M12x1.75
2	11500257	2							WASHER, Flat, M12x24x2.80
3	52000712	1							BRACKET, Tow Hook
4	34201964	4							BOLT, Hex Flange Head, M12x1.75x40
5	52057999AB	2							HOOK, Tow
6	11504922	2							BOLT, Hex Head, M12x1.75x50
7									REINFORCEMENT, Sill
	52001174	1							Right
	52001175	1							Left
8	34201353	2							RIVET, M6.3x14.02
9	52001644	1							EYE, Tow

CHEROKEE (XJ)

SERIES	LINE	BODY	ENGINE	TRANSMISSION
L = LOWLINE	T = JEEP - 2WD B = JEEP - 2WD (RHD) J = JEEP - 4WD U = JEEP - 4WD (RHD)	72 = SPORT UTILITY 2-DR 74 = SPORT UTILITY 4-DR	ENC = 2.5L 4 Cyl Turbo Diesel Engine EPB = 2.5L 4 Cylinder Engine EPE = Engine - 2.5L Power Tech I-4 Cyl. ERH = 4.0L Power Tech I-6 Engine	DDQ = 5-Speed Manual Transmission DGS = 4-Speed Automatic AW4 Transmission DGO = ALL AUTOMATIC TRANSMISSIONS DBB = ALL MANUAL TRANSMISSIONS

Group - 14

Fuel

014-100 Tank, Fuel 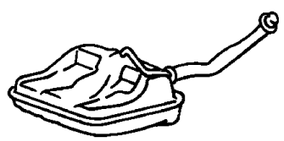	**014-1000** Speed Control 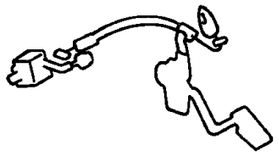	**014-1100** Accelerator Pedal 	**014-200** Fuel Tank Filler Tube 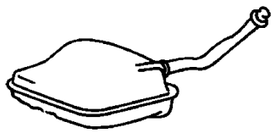
014-300 Fuel Lines 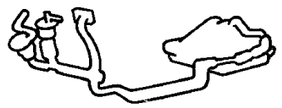	**014-400** Fuel Rail 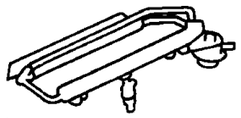	**014-500** Fuel Pump and Sending Unit 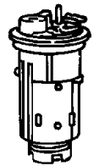	**014-600** Throttle Body
014-700 Throttle Controls 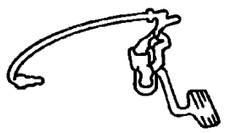	**014-800** Air Cleaner 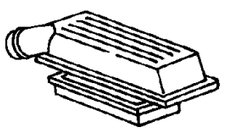	**014-900** Air Intake System 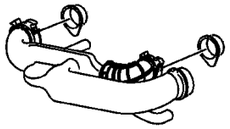	

Group - 14 Fuel

Illustration Title — Group-Fig. No.

Tank, Fuel
Fuel Tank ..... Fig. 14 - 120

Fuel Tank Filler Tube
Fuel Tank Filler Tube ..... Fig. 14 - 220

Fuel Lines
Fuel Lines, Front ..... Fig. 14 - 310
Fuel Lines, Rear ..... Fig. 14 - 320
Fuel Lines, Front ..... Fig. 14 - 325
Fuel Lines, Rear ..... Fig. 14 - 335

Fuel Rail
Fuel Injection System ..... Fig. 14 - 410
Fuel Injection System ..... Fig. 14 - 440
Fuel Injection Pump ..... Fig. 14 - 460

Fuel Pump and Sending Unit
Fuel Pump and Sending Unit ..... Fig. 14 - 520

Throttle Body
Throttle Body ..... Fig. 14 - 610
Turbocharger ..... Fig. 14 - 660

Throttle Controls
Throttle Controls ..... Fig. 14 - 720

Air Cleaner
Air Cleaner ..... Fig. 14 - 820
Air Cleaner ..... Fig. 14 - 835

Air Intake System
Air Intake System ..... Fig. 14 - 910

Speed Control
Speed Control ..... Fig. 14 - 1010

Accelerator Pedal
Accelerator Pedal ..... Fig. 14 - 1110

Fuel Tank
Figure 14-120

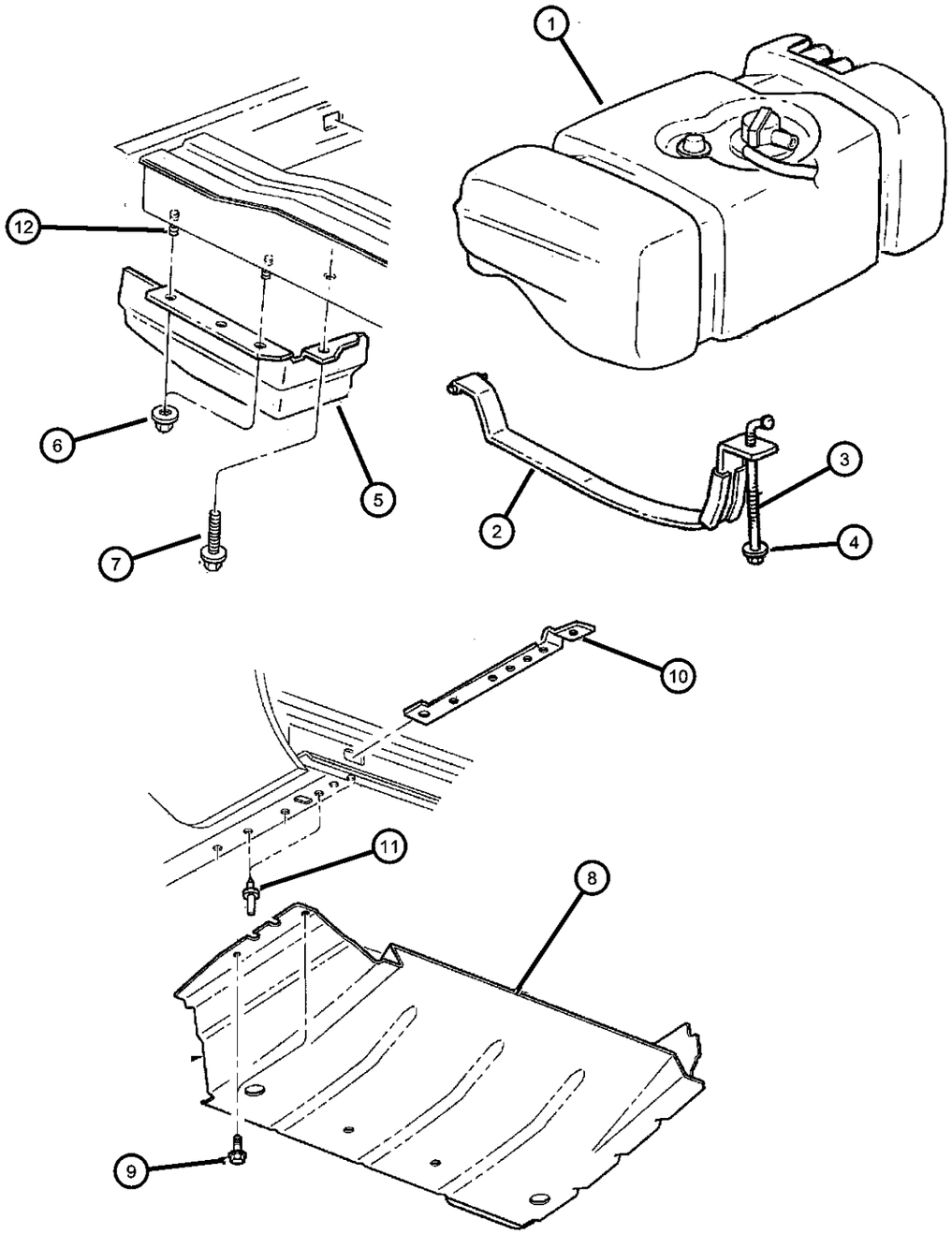

ITEM	PART NUMBER	QTY	LINE	SERIES	BODY	ENGINE	TRANS	TRIM	DESCRIPTION
NOTE: EP0=All 2.5L Gas Engines EN0=All 2.5L Diesel Engines ER0=All 4.0L Engines									
1									TANK, Fuel
	52100259	1				EP0, ER0			
		1				EN0			
2	52100009	2							STRAP, Fuel Tank
3									J BOLT, Fuel Tank Support
	J3240023	2	B		72				
		2	B		74				
		2	J		72				
		2	J		74				
		2	T		72				
		2	T		74				
		2	U		72				
		2	U		74				
4	06034955	2							NUT, Hex Flange Lock, .375-16
5	52100014	1							SHIELD, Fuel Tank
6	06100055	2							NUT AND WASHER, Hex Nut-Coned Washer, M12 x 1.75
7	06101777	4							SCREW, Hex Flange Head Tapping, M6x1.00x20.00
8	52100328AA	1							PLATE, Skid
9	34201964	2							BOLT, Hex Flange Head, M12x1.75x40
10									REINFORCEMENT, Sill
	52001174	1							Right
	52001175	1							Left
11	34201353	4							RIVET, M6.3x14.02
12	06504497	2							STUD, M12x1.75x72.00

CHEROKEE (XJ)

SERIES	LINE	BODY	ENGINE	TRANSMISSION
L = LOWLINE	T = JEEP - 2WD B = JEEP - 2WD (RHD) J = JEEP - 4WD U = JEEP - 4WD (RHD)	72 = SPORT UTILITY 2-DR 74 = SPORT UTILITY 4-DR	ENC = 2.5L 4 Cyl Turbo Diesel Engine EPB = 2.5L 4 Cylinder Engine EPE = Engine - 2.5L Power Tech I-4 Cyl. ERH = 4.0L Power Tech I-6 Engine	DDQ = 5-Speed Manual Transmission DGS = 4-Speed Automatic AW4 Transmission DGO = ALL AUTOMATIC TRANSMISSIONS DBB = ALL MANUAL TRANSMISSIONS

Fuel Tank Filler Tube
Figure 14-220

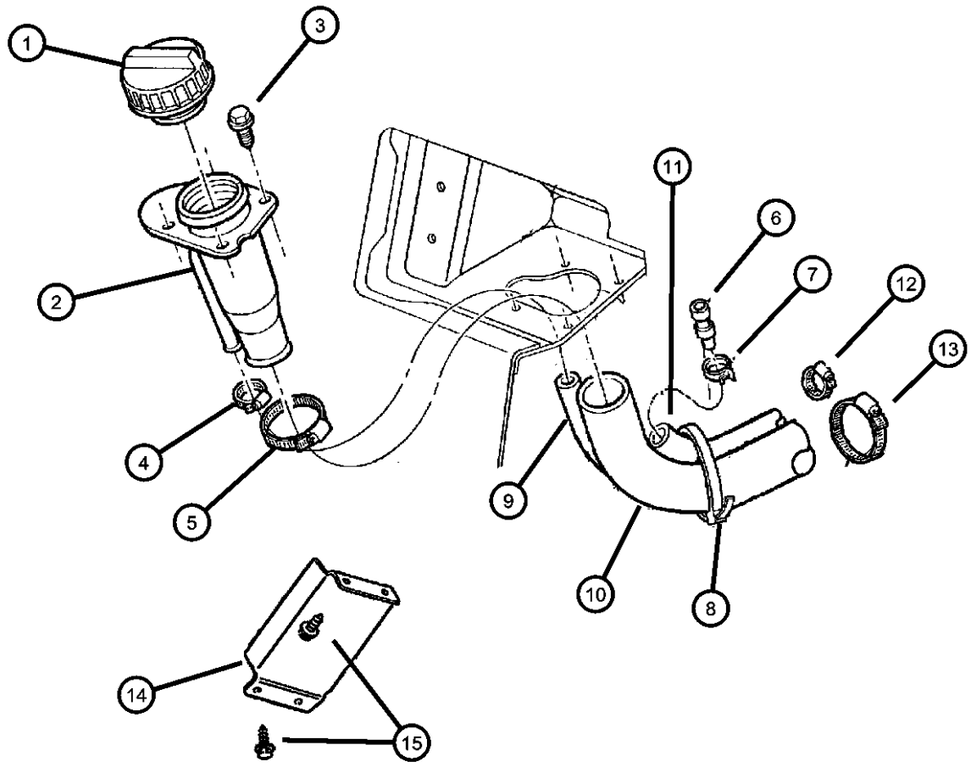

ITEM	PART NUMBER	QTY	LINE	SERIES	BODY	ENGINE	TRANS	TRIM	DESCRIPTION
NOTE: EP0=All 2.5L Gas Engines EN0=All 2.5L Diesel Engines ER0=All 4.0L Engines									
1									CAP, Fuel Filler
	52100205	1				EP0, ER0			Without Lock
	52100239	1							With Lock
2									TUBE, Fuel Filler
	52100173	1				EP0, ER0			Without Leaded Fuel
	52100174	1							With Leaded Fuel and Diesel
3	00154236	4							SCREW, Stake, .19-24
4	J3203077	1							CLAMP, Hose
5	J3203077	1							CLAMP, (NOT SERVICED)
6	J5352955	1	J, U						VENT, Axle
7									CLAMP, Oil Cooler Line
	06502081	1				EP0, ER0			
		1				EN0			
8	04641780	1				EP0, ER0			STRAP, Tie
9									HOSE, Fuel Filler Vent
	52100132	1				EN0			
		1				EP0, ER0			
10									HOSE, Fuel Filler
	52100131AB	1				EN0			
		1				EP0, ER0			
11	52018866	1				EN0			TUBE, Vent
12									CLAMP, HOSE CLAMP
	06502089	1				EP0, ER0			
		1				EN0			
13									CLAMP, HOSE CLAMP
	06502450	1				EP0, ER0			
		1				EN0			
14	55003285AB	1							SHIELD, Heat
15	34201895	2							SCREW, Hex Head Tapping, M6.3x1.81x16.00

CHEROKEE (XJ)

SERIES	LINE	BODY	ENGINE	TRANSMISSION
L = LOWLINE	T = JEEP - 2WD B = JEEP - 2WD (RHD) J = JEEP - 4WD U = JEEP - 4WD (RHD)	72 = SPORT UTILITY 2-DR 74 = SPORT UTILITY 4-DR	ENC = 2.5L 4 Cyl Turbo Diesel Engine EPB = 2.5L 4 Cylinder Engine EPE = Engine - 2.5L Power Tech I-4 Cyl. ERH = 4.0L Power Tech I-6 Engine	DDQ = 5-Speed Manual Transmission DGS = 4-Speed Automatic AW4 Transmission DGO = ALL AUTOMATIC TRANSMISSIONS DBB = ALL MANUAL TRANSMISSIONS

Fuel Lines, Front
Figure 14-310

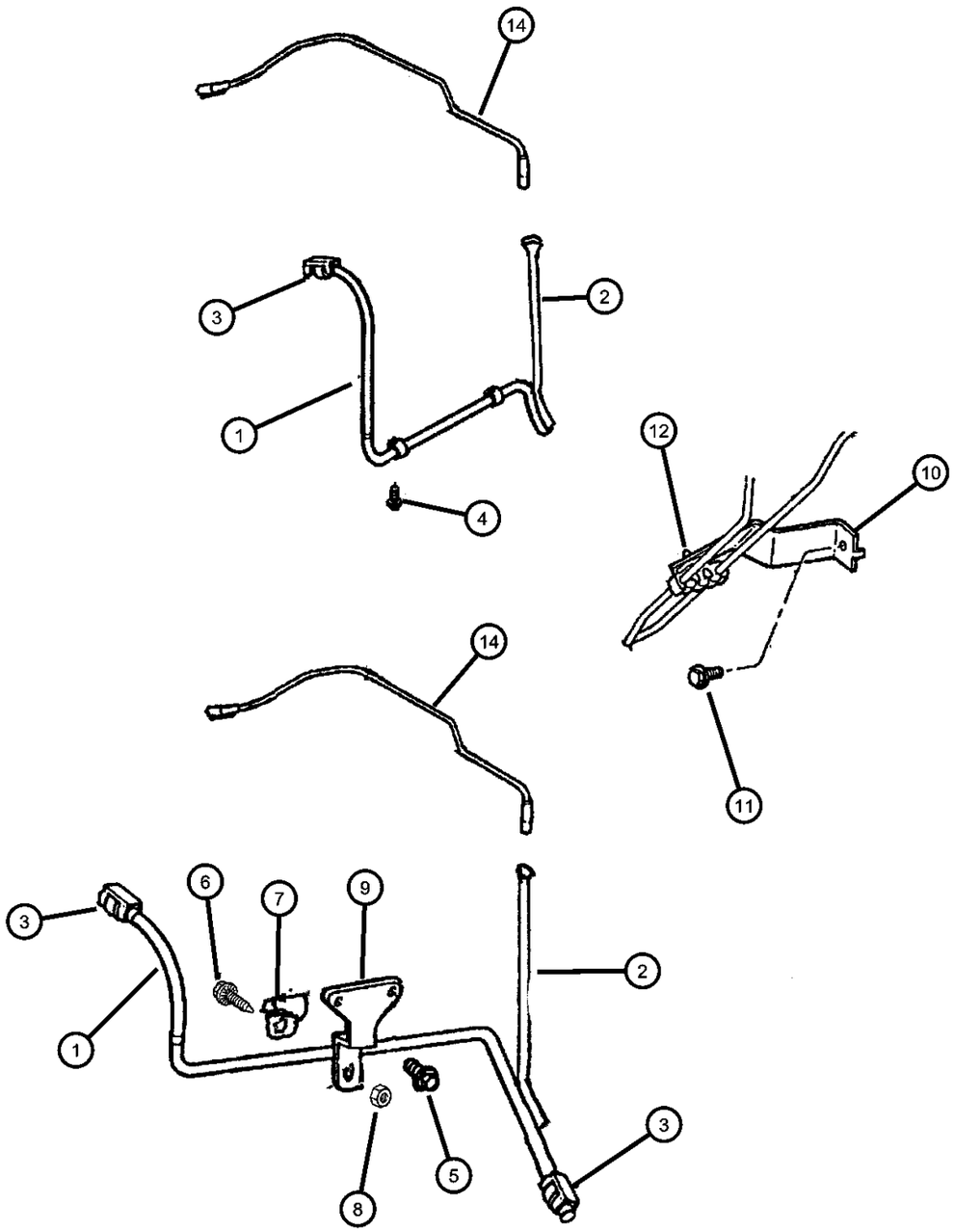

ITEM	PART NUMBER	QTY	LINE	SERIES	BODY	ENGINE	TRANS	TRIM	DESCRIPTION
NOTE: EP0=All 2.5L Gas Engines ER0=All 4.0L Engines									
1									BUNDLE, Fuel Line
	52100136AB	1				EP0			
	52100138AB	1				ER0			
2	52100162	1				EP0, ER0			TUBE, Fuel Vapor
3	52127788	2				ER0			CLIP, Fuel Line
4	06101786	2				EP0			SCREW, Self Tapping, M6x1x15
5	06503486	2				ER0			STUD
6	06501714	1				ER0			SCREW AND WASHER, Hex Head, M6x1x18
7									CLIP, Fuel Line
	06504589	2				EP0			
		1				ER0			
8									NUT AND WASHER, Hex Nut-Coned Washer, M6 x 1.00
	06100047	1				EP0			
		1				ER0			
9	52007273	1				ER0			CLIP, Fuel Line
10	52007187	1							BRACKET, Fuel Line
11	34201895	2							SCREW, Hex Head Tapping, M6.3x1.81x16.00
12	52127585	1				EP0, ER0			CLIP, Fuel Line
-13	52127585	1							CLIP, 5 Way, (NOT REQUIRED)
14	52100039	1	J, T			EP0, ER0			TUBE, Fuel Vapor

CHEROKEE (XJ)

SERIES	LINE	BODY	ENGINE	TRANSMISSION
L = LOWLINE	T = JEEP - 2WD B = JEEP - 2WD (RHD) J = JEEP - 4WD U = JEEP - 4WD (RHD)	72 = SPORT UTILITY 2-DR 74 = SPORT UTILITY 4-DR	ENC = 2.5L 4 Cyl Turbo Diesel Engine EPB = 2.5L 4 Cylinder Engine EPE = Engine - 2.5L Power Tech I-4 Cyl. ERH = 4.0L Power Tech I-6 Engine	DDQ = 5-Speed Manual Transmission DGS = 4-Speed Automatic AW4 Transmission DGO = ALL AUTOMATIC TRANSMISSIONS DBB = ALL MANUAL TRANSMISSIONS

Fuel Lines, Rear
Figure 14-320

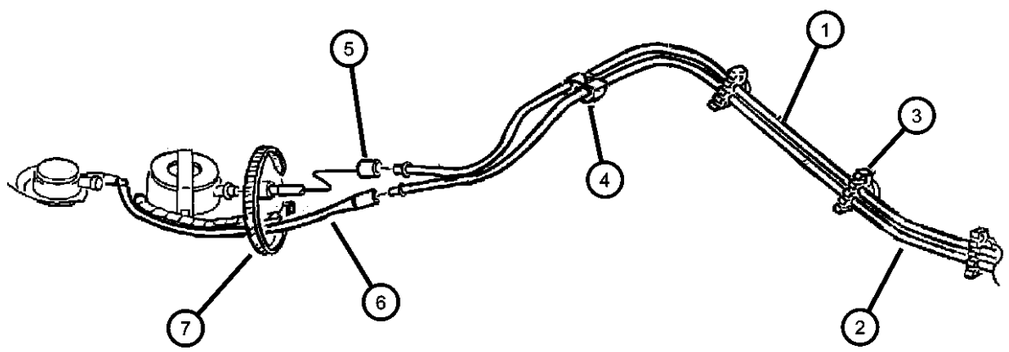

ITEM	PART NUMBER	QTY	LINE	SERIES	BODY	ENGINE	TRANS	TRIM	DESCRIPTION
NOTE: EP0=All 2.5L Gas Engines ER0=All 4.0L Engines									
1	52127896	1				EP0, ER0			TUBE, Fuel Supply
2	52100162	1				EP0, ER0			TUBE, Fuel Vapor
3	34202371	6							CLIP, 5 Way
4	04612871AB	1	J, T						CLIP, Fuel Bundle
5	52100037	1				EP0, ER0			TUBE, Fuel Supply
6	52100035	1				EP0, ER0			TUBE, Fuel Vapor
7	04641780	1				EP0, ER0			STRAP, Tie

CHEROKEE (XJ)

SERIES	LINE	BODY	ENGINE	TRANSMISSION
L = LOWLINE	T = JEEP - 2WD B = JEEP - 2WD (RHD) J = JEEP - 4WD U = JEEP - 4WD (RHD)	72 = SPORT UTILITY 2-DR 74 = SPORT UTILITY 4-DR	ENC = 2.5L 4 Cyl Turbo Diesel Engine EPB = 2.5L 4 Cylinder Engine EPE = Engine - 2.5L Power Tech I-4 Cyl. ERH = 4.0L Power Tech I-6 Engine	DDQ = 5-Speed Manual Transmission DGS = 4-Speed Automatic AW4 Transmission DGO = ALL AUTOMATIC TRANSMISSIONS DBB = ALL MANUAL TRANSMISSIONS

Fuel Lines, Front
Figure 14-325

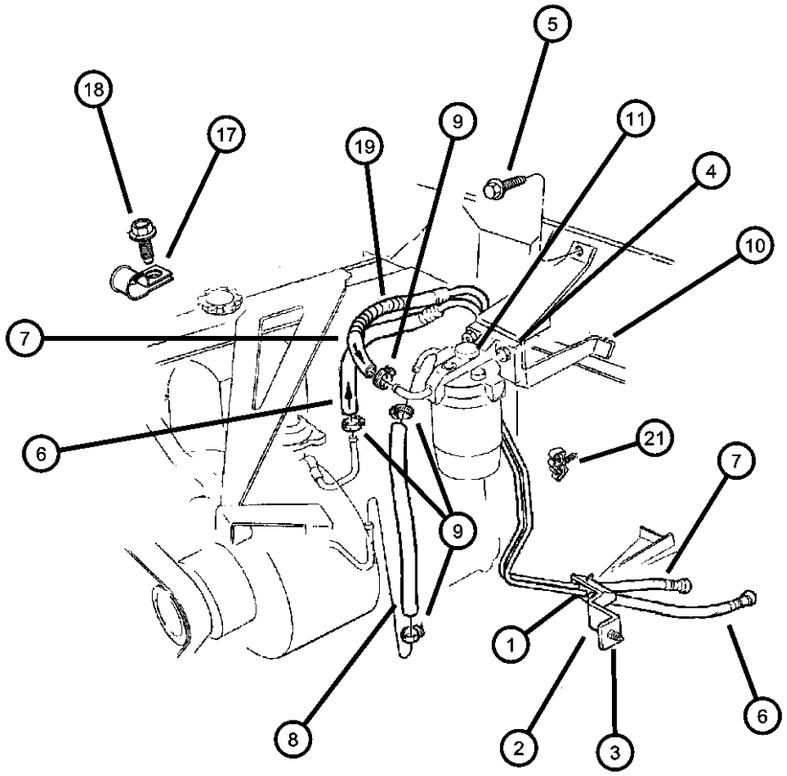

ITEM	PART NUMBER	QTY	LINE	SERIES	BODY	ENGINE	TRANS	TRIM	DESCRIPTION
NOTE: EN0=All 2.5L Diesel Engines									
1	34202371	6							CLIP, 5 Way
2	52007187	1							BRACKET, Fuel Line
3	34201381	4							SCREW, Hex Flange Head Tapping, M6x1.00x20.00
4	06101675	2				EN0			NUT, Hex Flange Lock, M8x1.25
5	06101675	2							SCREW AND WASHER, .190-16x.500, (NOT SERVICED)
6	52100079	1				EN0			TUBE, Fuel Return
7	52100107	1				EN0			TUBE, Fuel Supply
8	04443176	1							HOSE, Fuel, .31 I.D. 50 Foot Roll
9	06504502	2	J, T			EN0			CLAMP, Oil Cooler Line
10	53030927	1	J, T			EN0			BRACKET, Fuel Filter
11	53030927	1							FILTER, Fuel, Consists of: #12,13,14,15,16, (NOT SERVICED)
-12	04723899	1				EN0			HEAD, Fuel Filter
-13	04723901	1				EN0			VALVE KIT, Fuel Filter Check
-14	04723905	1				EN0			FILTER, Fuel
-15	04723906	1				EN0			BOWL, Fuel Filter
-16	04723907	1				EN0			DRAIN, Fuel Filter Bowl
17	34202997	1				EN0			CLIP, Wrap Around Sealing
18	06101777	1				EN0			SCREW, Hex Flange Head Tapping, M6x1.00x20.00
19	04592145	1				EN0			SLEEVE, Braided
-20	04546594	1				EN0			SLEEVE, Braided Expandable
21	52100077	1				EN0			CLIP, Tube, 2 Way

CHEROKEE (XJ)

SERIES	LINE	BODY	ENGINE	TRANSMISSION
L = LOWLINE	T = JEEP - 2WD B = JEEP - 2WD (RHD) J = JEEP - 4WD U = JEEP - 4WD (RHD)	72 = SPORT UTILITY 2-DR 74 = SPORT UTILITY 4-DR	ENC = 2.5L 4 Cyl Turbo Diesel Engine EPB = 2.5L 4 Cylinder Engine EPE = Engine - 2.5L Power Tech I-4 Cyl. ERH = 4.0L Power Tech I-6 Engine	DDQ = 5-Speed Manual Transmission DGS = 4-Speed Automatic AW4 Transmission DGO = ALL AUTOMATIC TRANSMISSIONS DBB = ALL MANUAL TRANSMISSIONS

Fuel Lines, Rear
Figure 14-335

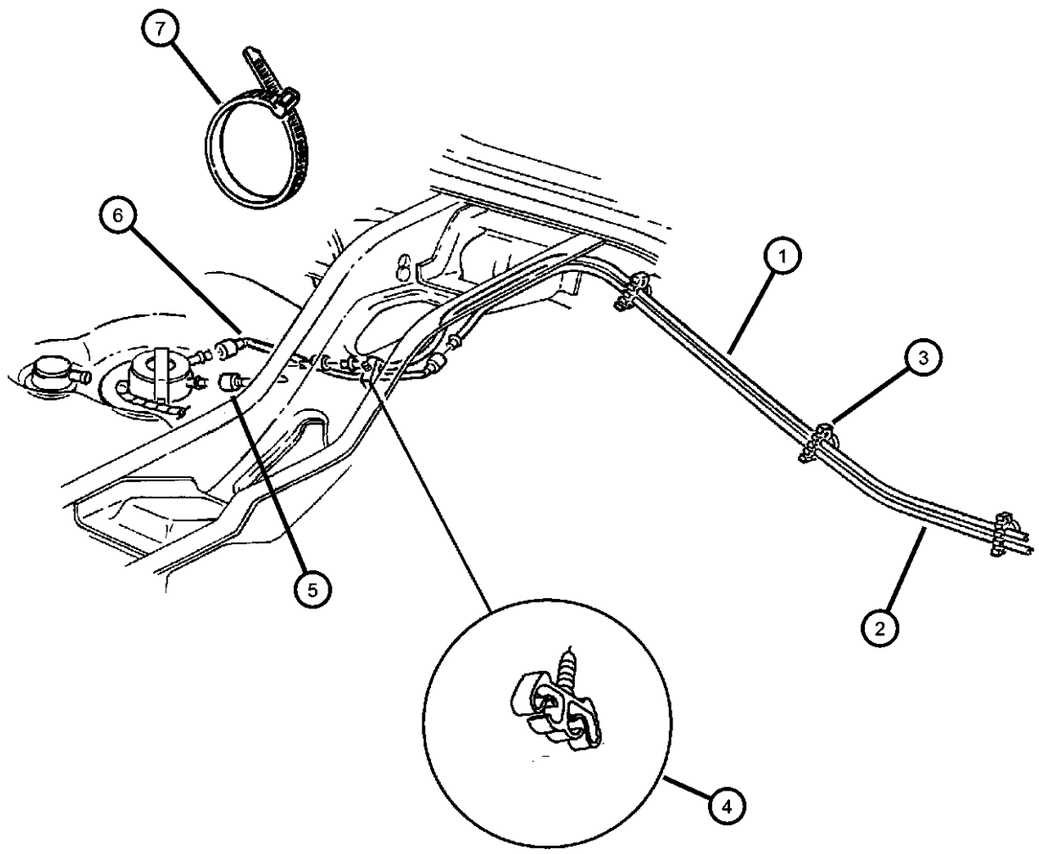

ITEM	PART NUMBER	QTY	LINE	SERIES	BODY	ENGINE	TRANS	TRIM	DESCRIPTION
NOTE: All 2.5L Diesel Engines									
1	52127896	1				EN0			TUBE, Fuel Supply
2	52127898	1				EN0			TUBE, Fuel Return
3	34202371	6							CLIP, 5 Way
4	04612871AB	1	J, T						CLIP, Fuel Bundle
5	52100037	1				EN0			TUBE, Fuel Supply
6	52100038	1				EN0			TUBE, Fuel Return
7	04641780	1				EN0			STRAP, Tie

CHEROKEE (XJ)

SERIES	LINE	BODY	ENGINE	TRANSMISSION
L = LOWLINE	T = JEEP - 2WD B = JEEP - 2WD (RHD) J = JEEP - 4WD U = JEEP - 4WD (RHD)	72 = SPORT UTILITY 2-DR 74 = SPORT UTILITY 4-DR	ENC = 2.5L 4 Cyl Turbo Diesel Engine EPB = 2.5L 4 Cylinder Engine EPE = Engine - 2.5L Power Tech I-4 Cyl. ERH = 4.0L Power Tech I-6 Engine	DDQ = 5-Speed Manual Transmission DGS = 4-Speed Automatic AW4 Transmission DGO = ALL AUTOMATIC TRANSMISSIONS DBB = ALL MANUAL TRANSMISSIONS

Fuel Injection System
Figure 14-410

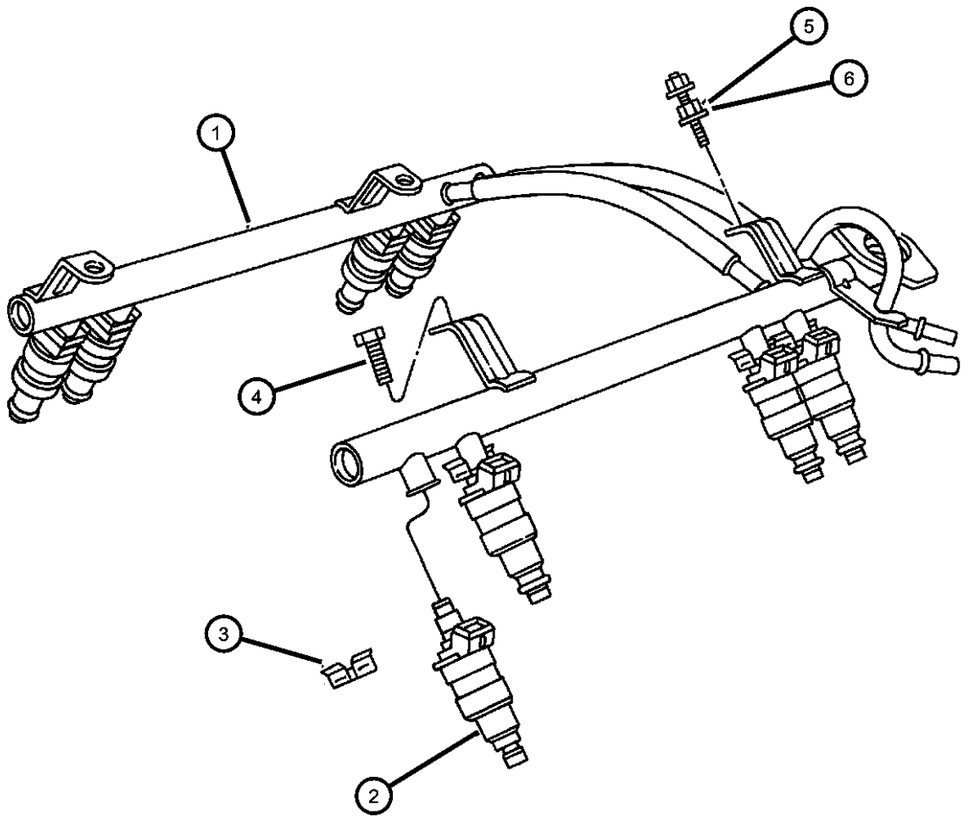

ITEM	PART NUMBER	QTY	LINE	SERIES	BODY	ENGINE	TRANS	TRIM	DESCRIPTION
NOTE: EP0=All 2.5L Gas Engines ER0=All 4.0L Engines									
1									RAIL, Fuel
	53030699	1				ER0			
	53030977	1				EP0			
2									INJECTOR, Fuel
	53030778	4				EP0			
		6				ER0			
3									CLIP, Fuel Injector
	04418257	6				ER0			
		4				EP0			
4									SCREW AND WASHER, Hex Head, M6x1x17
	06501979	3				ER0			
		2				EP0			
5	06502086	2				EP0			STUD
6	06502647	1				ER0			STUD, M6x1.00x44
-7	05018781AA	1				ER0			CAP, Diagnostic Port
-8	04897125AA	4				EP0			O RING KIT, Fuel Injector

CHEROKEE (XJ)

SERIES	LINE	BODY	ENGINE	TRANSMISSION
L = LOWLINE	T = JEEP - 2WD B = JEEP - 2WD (RHD) J = JEEP - 4WD U = JEEP - 4WD (RHD)	72 = SPORT UTILITY 2-DR 74 = SPORT UTILITY 4-DR	ENC = 2.5L 4 Cyl Turbo Diesel Engine EPB = 2.5L 4 Cylinder Engine EPE = Engine - 2.5L Power Tech I-4 Cyl. ERH = 4.0L Power Tech I-6 Engine	DDQ = 5-Speed Manual Transmission DGS = 4-Speed Automatic AW4 Transmission DGO = ALL AUTOMATIC TRANSMISSIONS DBB = ALL MANUAL TRANSMISSIONS

Fuel Injection System
Figure 14-440

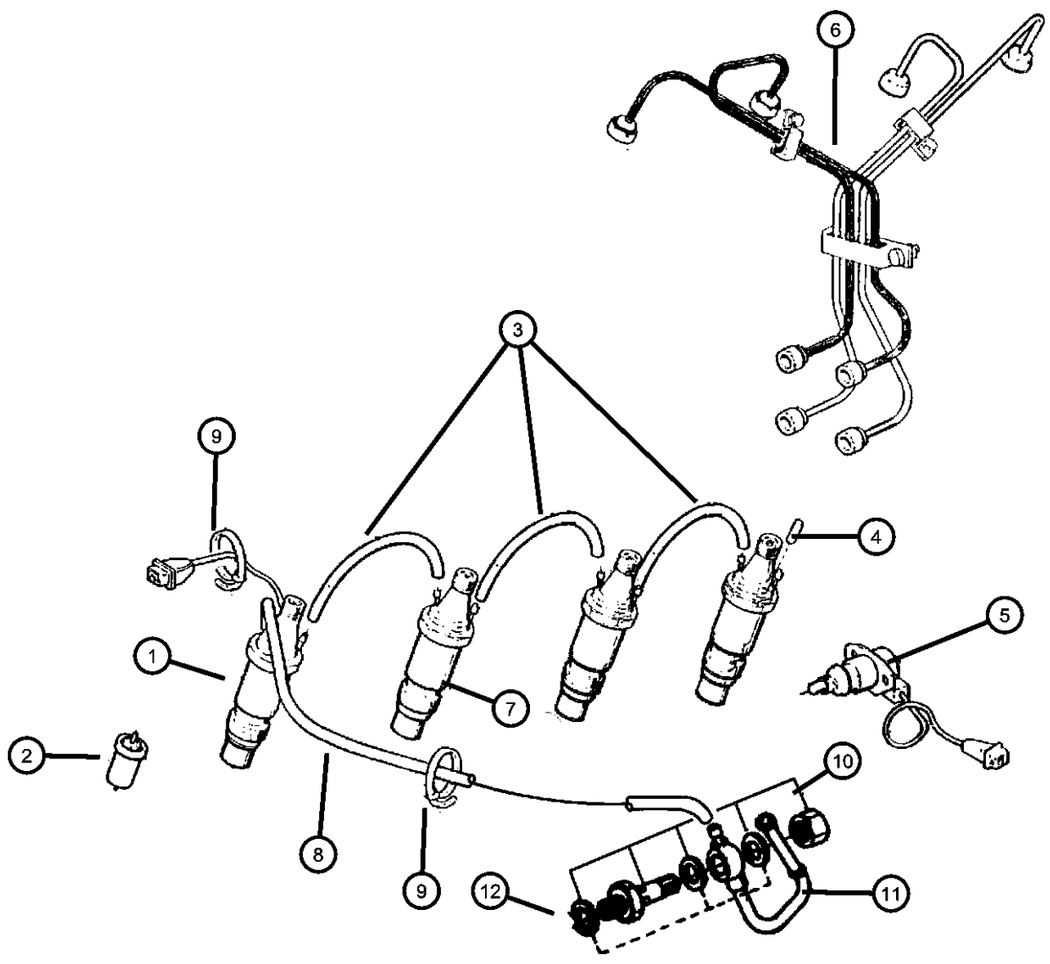

ITEM	PART NUMBER	QTY	LINE	SERIES	BODY	ENGINE	TRANS	TRIM	DESCRIPTION
NOTE: EN0=All 2.5L Diesel Engines									
1	04883456AA	1				EN0			INJECTOR, Fuel
2	04723346	4				EN0			NOZZLE, Fuel Injector
3	04720189	3				EN0			PIPE, Fuel Spill Return
4	04720197	1				EN0			PLUG, Cylinder Block Oil Hole
5	04797786	1				EN0			ADVANCE, Automatic Injection
6	04778998	1				EN0			TUBE, Fuel Injector Supply
7	04720171	3				EN0			INJECTOR, Fuel
8	04720190	1				EN0			PIPE, Fuel Spill Return
9	04728184	1				EN0			CLIP, Spill Return Pipe
10	04874444	1				EN0			VALVE, Flow Control
11	04864579	1				EN0			BANJO, Fuel
12	04720703	11				EN0			WASHER, Plain

CHEROKEE (XJ)

SERIES	LINE	BODY	ENGINE	TRANSMISSION
L = LOWLINE	T = JEEP - 2WD B = JEEP - 2WD (RHD) J = JEEP - 4WD U = JEEP - 4WD (RHD)	72 = SPORT UTILITY 2-DR 74 = SPORT UTILITY 4-DR	ENC = 2.5L 4 Cyl Turbo Diesel Engine EPB = 2.5L 4 Cylinder Engine EPE = Engine - 2.5L Power Tech I-4 Cyl. ERH = 4.0L Power Tech I-6 Engine	DDQ = 5-Speed Manual Transmission DGS = 4-Speed Automatic AW4 Transmission DGO = ALL AUTOMATIC TRANSMISSIONS DBB = ALL MANUAL TRANSMISSIONS

Fuel Injection Pump
Figure 14-460

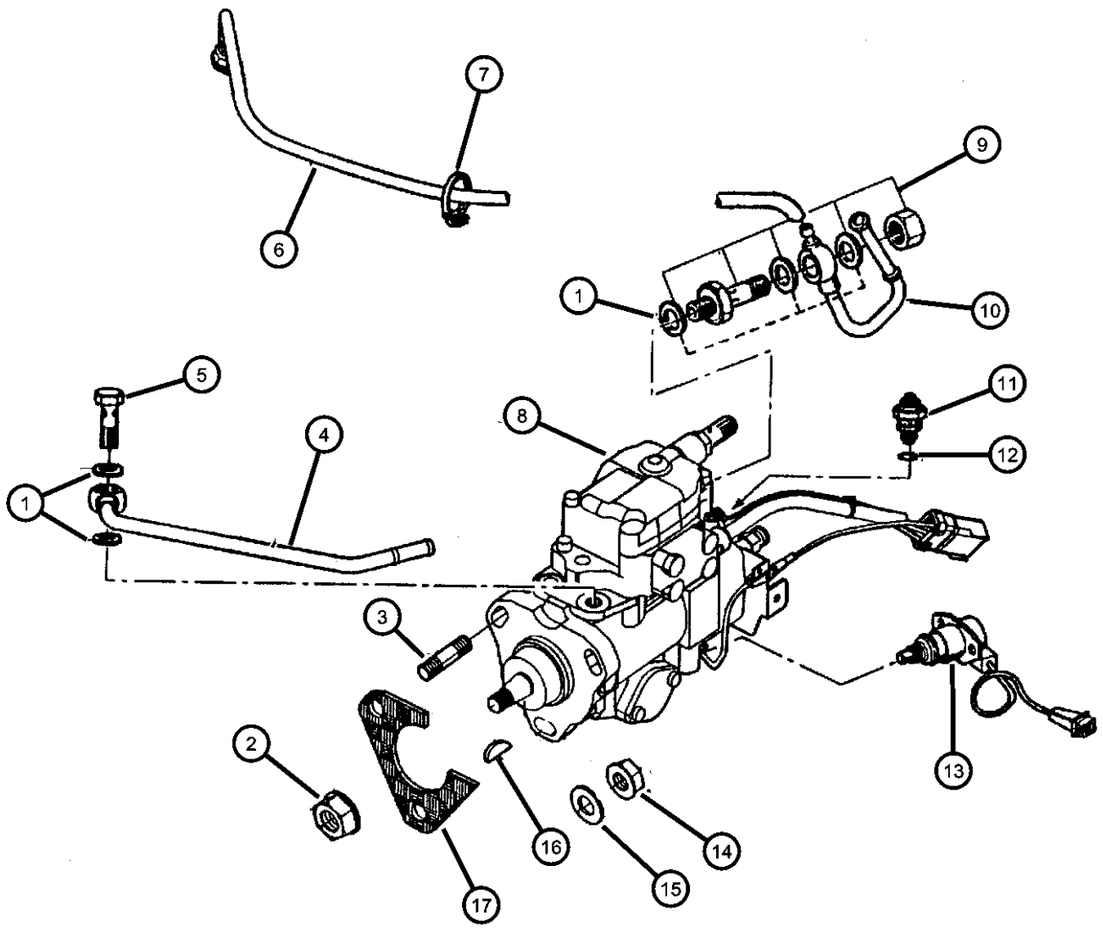

ITEM	PART NUMBER	QTY	LINE	SERIES	BODY	ENGINE	TRANS	TRIM	DESCRIPTION
NOTE: EN0=All 2.5L Diesel Engines									
1	04720703	11				EN0			WASHER, Plain
2	04883402AA	1				EN0			NUT
3	04723241	11				EN0			STUD
4	04886307AA	1				EN0			BANJO, Fuel
5	04720367	3				EN0			BOLT, Banjo
6	04720190	1				EN0			PIPE, Fuel Spill Return
7	04728184	1				EN0			CLIP, Spill Return Pipe
8	04883459AA	1				EN0			PUMP, Fuel Injection
9	04874444	1				EN0			VALVE, Flow Control
10	04864579	1				EN0			BANJO, Fuel
11	04723264	1				EN0			SOLENOID, Fuel Shut Off Valve
12	04723266	1				EN0			O RING, Fuel Solenoid
13	04797786	1				EN0			ADVANCE, Automatic Injection
14	04778961	22				EN0			NUT
15	04720193	3				EN0			WASHER, Flat
16	04720198	1				EN0			KEY, Fuel Injection Pump
17	04720196	1				EN0			GASKET, Injection Pump

CHEROKEE (XJ)

SERIES	LINE	BODY	ENGINE	TRANSMISSION
L = LOWLINE	T = JEEP - 2WD B = JEEP - 2WD (RHD) J = JEEP - 4WD U = JEEP - 4WD (RHD)	72 = SPORT UTILITY 2-DR 74 = SPORT UTILITY 4-DR	ENC = 2.5L 4 Cyl Turbo Diesel Engine EPB = 2.5L 4 Cylinder Engine EPE = Engine - 2.5L Power Tech I-4 Cyl. ERH = 4.0L Power Tech I-6 Engine	DDQ = 5-Speed Manual Transmission DGS = 4-Speed Automatic AW4 Transmission DGO = ALL AUTOMATIC TRANSMISSIONS DBB = ALL MANUAL TRANSMISSIONS

Fuel Pump and Sending Unit
Figure 14-520

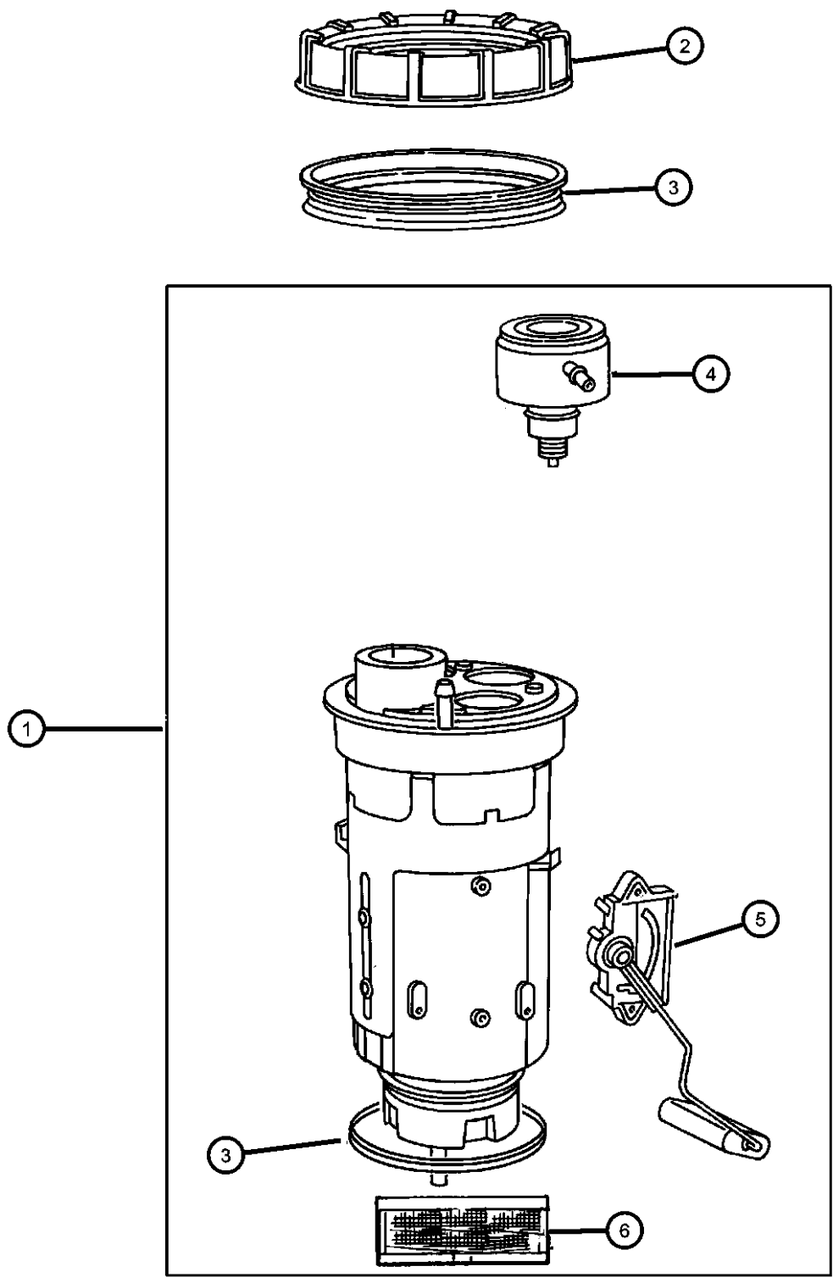

ITEM	PART NUMBER	QTY	LINE	SERIES	BODY	ENGINE	TRANS	TRIM	DESCRIPTION
NOTE: EP0=All 2.5L Gas Engines EN0=All 2.5L Diesel Engines ER0=All 4.0L Engines									
1									MODULE PACKAGE, Fuel Tank
	04874173	1				EP0, ER0			
	04874272	1				EN0			
2									NUT, Fuel Pump Module
	52005389	1				EN0			
		1				EP0, ER0			
3									SEAL, Fuel Pump and Level Unit
	52018808	1				EP0, ER0			
		1				EN0			
4	04798301	1				EP0, ER0			FILTER, Fuel
5									LEVEL UNIT, Fuel
	04856913	1				EP0, ER0			
		1				EN0			
6	04798299	1				EP0, ER0			FILTER, Fuel Module
-7	04856914	1				EN0			FILTER, Fuel Pump And Level Unit

CHEROKEE (XJ)

SERIES	LINE	BODY	ENGINE	TRANSMISSION
L = LOWLINE	T = JEEP - 2WD B = JEEP - 2WD (RHD) J = JEEP - 4WD U = JEEP - 4WD (RHD)	72 = SPORT UTILITY 2-DR 74 = SPORT UTILITY 4-DR	ENC = 2.5L 4 Cyl Turbo Diesel Engine EPB = 2.5L 4 Cylinder Engine EPE = Engine - 2.5L Power Tech I-4 Cyl. ERH = 4.0L Power Tech I-6 Engine	DDQ = 5-Speed Manual Transmission DGS = 4-Speed Automatic AW4 Transmission DGO = ALL AUTOMATIC TRANSMISSIONS DBB = ALL MANUAL TRANSMISSIONS

Throttle Body
Figure 14-610

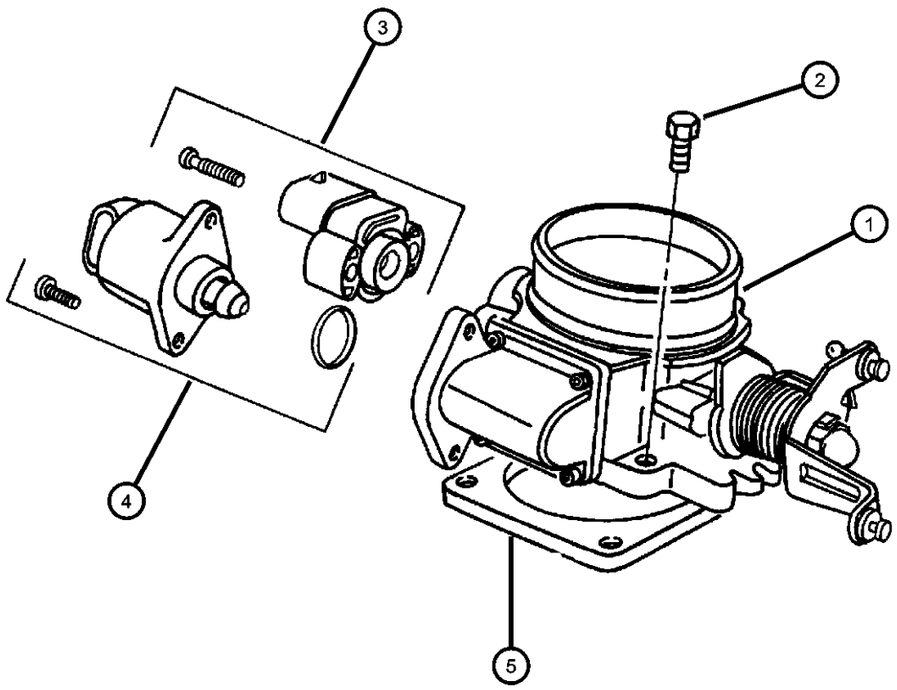

ITEM	PART NUMBER	QTY	LINE	SERIES	BODY	ENGINE	TRANS	TRIM	DESCRIPTION
NOTE: EP0=All 2.5L Gas Engines, ER0=All 4.0L Engines									
1									THROTTLE BODY
	53032016AB	1				EP0			
	53032023AB	1				ER0			
2	06503929	4				EP0, ER0			SCREW AND WASHER, Coned Pilot, M6x1x30
3	04874371	1				EP0			SENSOR, Throttle Position
4									MOTOR, Air Idle Speed
	04798376	1				EP0			
	04798377	1				ER0			
5	53007543	1				EP0, ER0			GASKET, Throttle Body
-6	53009672	1				EP0, ER0			CONNECTOR, Emission Hose

CHEROKEE (XJ)

SERIES	LINE	BODY	ENGINE	TRANSMISSION
L = LOWLINE	T = JEEP - 2WD B = JEEP - 2WD (RHD) J = JEEP - 4WD U = JEEP - 4WD (RHD)	72 = SPORT UTILITY 2-DR 74 = SPORT UTILITY 4-DR	ENC = 2.5L 4 Cyl Turbo Diesel Engine EPB = 2.5L 4 Cylinder Engine EPE = Engine - 2.5L Power Tech I-4 Cyl. ERH = 4.0L Power Tech I-6 Engine	DDQ = 5-Speed Manual Transmission DGS = 4-Speed Automatic AW4 Transmission DGO = ALL AUTOMATIC TRANSMISSIONS DBB = ALL MANUAL TRANSMISSIONS

Turbocharger
Figure 14-660

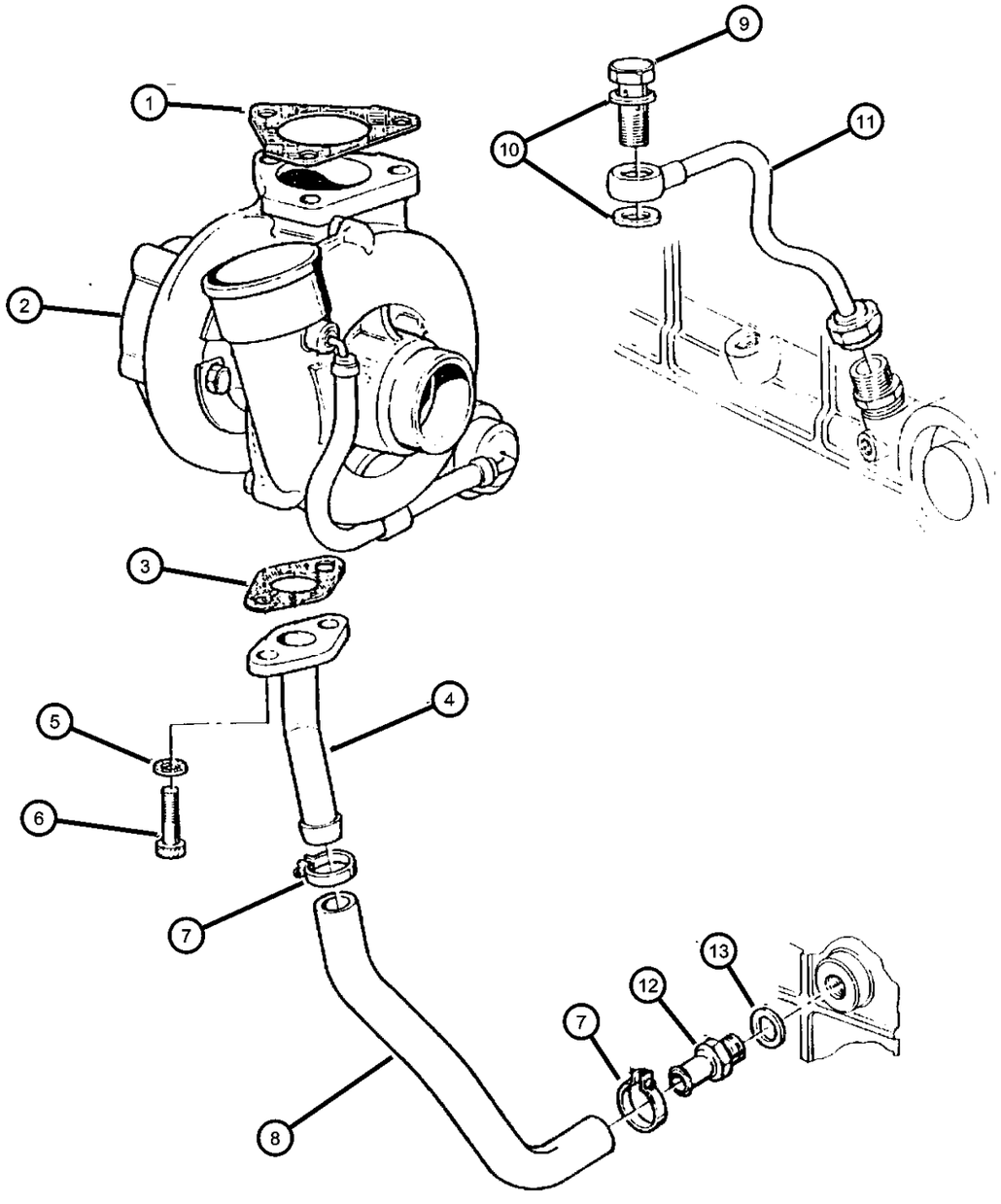

ITEM	PART NUMBER	QTY	LINE	SERIES	BODY	ENGINE	TRANS	TRIM	DESCRIPTION
NOTE: EN0=All 2.5L Diesel Engines									
1	04720203	1				EN0			GASKET, Turbocharger To Manifold
2	04864756	1				EN0			TURBOCHARGER
3	04796007	1				EN0			GASKET, Turbo Oil Return Pipe
4	04796008	1				EN0			PIPE, Oil Return
5	04720305	8				EN0			WASHER, Plain
6	04728186	2				EN0			BOLT, Oil Drain Pipe
7	04886052AA	2				EN0			CLAMP, Heater Hose
8	04796009	1				EN0			PIPE, Oil Return
9	04720367	3				EN0			BOLT, Banjo
10	04720703	11				EN0			WASHER, Plain
11	04796400	1				EN0			PIPE, Oil Feed
12	04796010	1				EN0			ADAPTER, Oil Delivery Tube
13	04797784	1				EN0			WASHER, Plain, 16.2x19.9x1.5

CHEROKEE (XJ)

SERIES	LINE	BODY	ENGINE	TRANSMISSION
L = LOWLINE	T = JEEP - 2WD B = JEEP - 2WD (RHD) J = JEEP - 4WD U = JEEP - 4WD (RHD)	72 = SPORT UTILITY 2-DR 74 = SPORT UTILITY 4-DR	ENC = 2.5L 4 Cyl Turbo Diesel Engine EPB = 2.5L 4 Cylinder Engine EPE = Engine - 2.5L Power Tech I-4 Cyl. ERH = 4.0L Power Tech I-6 Engine	DDQ = 5-Speed Manual Transmission DGS = 4-Speed Automatic AW4 Transmission DGO = ALL AUTOMATIC TRANSMISSIONS DBB = ALL MANUAL TRANSMISSIONS

Throttle Controls
Figure 14-720

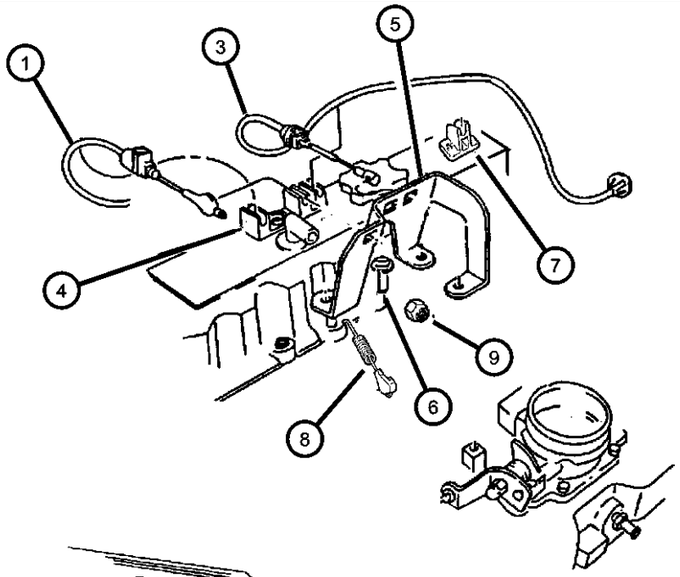

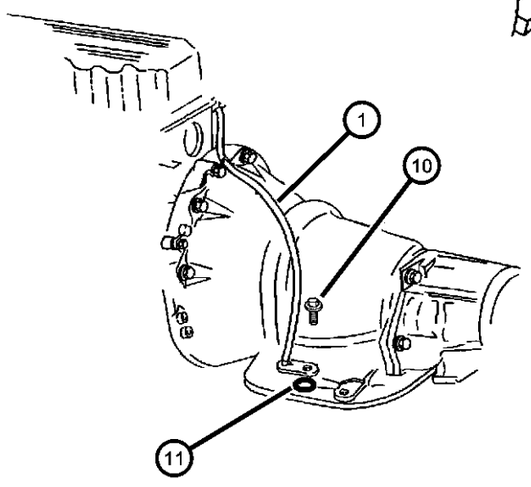

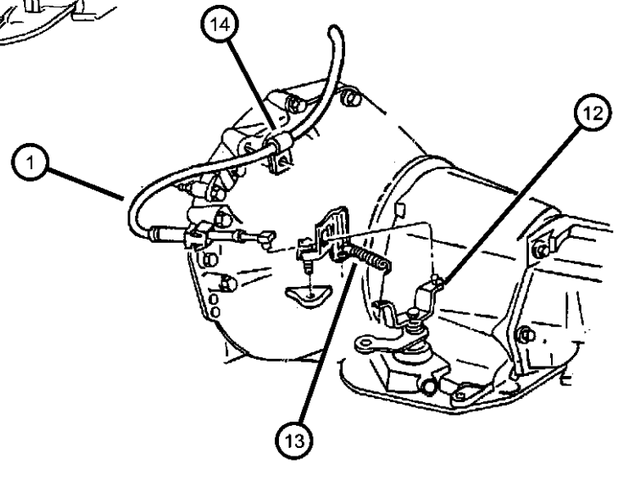

ITEM	PART NUMBER	QTY	LINE	SERIES	BODY	ENGINE	TRANS	TRIM	DESCRIPTION
NOTE: EP0=All 2.5L Gas Engine ER0=All 4.0L Engines									
1	52078171	1	J, T			EP0	DG0		CABLE, Throttle Valve
-2									CABLE, Throttle Control
	52077578	1	B, T			ER0	DGS		
		1	J, U			ER0	DGS		
3									CABLE, Accelerator
	04854087	1	B, U			EP0			
	52079504	1	J, T			EP0, ER0			
4									GUIDE, Accelerator Cable
	52079029	1				ER0			
	53007620	1				EP0			
5									BRACKET, Accelerator Cable
	53007485	1				EP0			
	53007486	1				ER0			
6									SCREW AND WASHER, Hex Head, M6x1x17
	06501979	3				ER0			
		2				EP0			
7	52078987	1	J, T			ER0			GUIDE, Accelerator Cable
8									SPRING, Throttle Return
	52078102AB	1				EP0, ER0	DBB		
	53007985	1	J, T			EP0	DG0		
9	06100047	1				ER0			NUT AND WASHER, Hex Nut-Coned Washer, M6 x 1.00
10									SCREW AND CONED WASHER, Hex Head, M6x1.00x16.00
	34201808	2				EN0, EP0			
		1	B			ER0	DGS		
		1	J			ER0	DGS		
11									O RING, Throttle Cable
	83503708	1	B, T			ER0	DGS		
		1	J, U			ER0	DGS		
12	53007983	1	J, T			EP0	DG0		LEVER, Throttle Valve
13	53007985	1	J, T			EP0	DG0		SPRING, Throttle Return
14	52078465	1				EP0	DGD		CLIP, Cable

CHEROKEE (XJ)

SERIES	LINE	BODY	ENGINE	TRANSMISSION
L = LOWLINE	T = JEEP - 2WD B = JEEP - 2WD (RHD) J = JEEP - 4WD U = JEEP - 4WD (RHD)	72 = SPORT UTILITY 2-DR 74 = SPORT UTILITY 4-DR	ENC = 2.5L 4 Cyl Turbo Diesel Engine EPB = 2.5L 4 Cylinder Engine EPE = Engine - 2.5L Power Tech I-4 Cyl. ERH = 4.0L Power Tech I-6 Engine	DDQ = 5-Speed Manual Transmission DGS = 4-Speed Automatic AW4 Transmission DGO = ALL AUTOMATIC TRANSMISSIONS DBB = ALL MANUAL TRANSMISSIONS

Air Cleaner
Figure 14-820

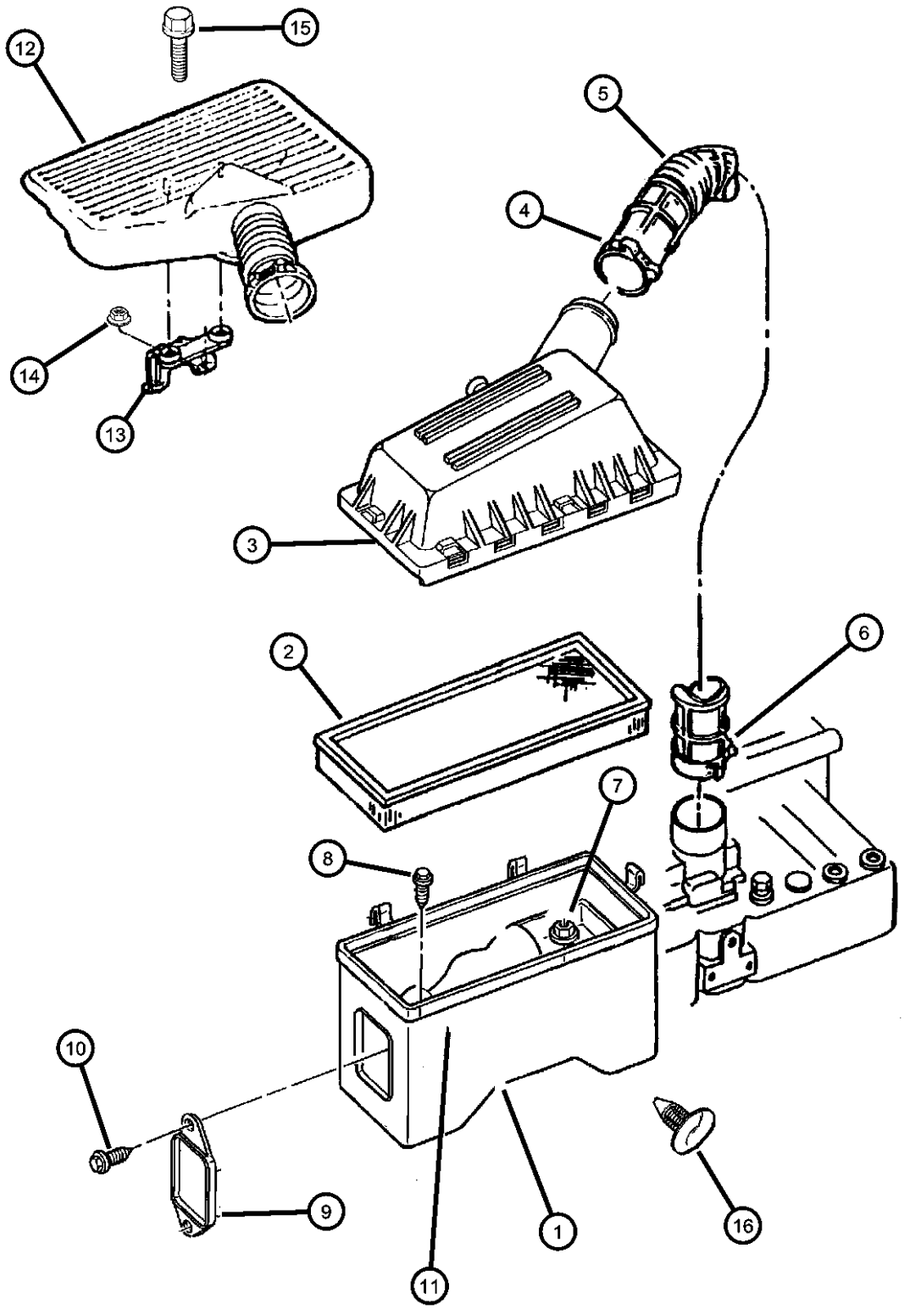

ITEM	PART NUMBER	QTY	LINE	SERIES	BODY	ENGINE	TRANS	TRIM	DESCRIPTION
NOTE: EP0=All 2.5L Gas Engines ER0=All 4.0L Engines									
1									BODY, Air Cleaner
	04854153	1				ER0			
		1				EP0			Federal, California, Leaded Fuel
	04854153AB	1				EP0			Europe
2	53004383	1				EP0, ER0			FILTER, Air
3	53030707	1				EP0, ER0			COVER, Air Cleaner
4									CLAMP, Hose to Air Cleaner
	53006584	1				ER0			
		1				EP0			
5	53006275	1				ER0			HOSE, Air Cleaner to T/Body
6									CLAMP, Air Cleaner Duct
	53006273	1				ER0			
		1				EP0			
7	06501291	1				EP0, ER0			NUT AND WASHER, Hex Nut-Coned Washer, M8 x 1.25
8	06501291	1							SCREW, M8x1.25x30, (NOT SERVICED)
9	53030740	1				EP0, ER0			COVER, Radiator Baffle
10	53030740	1							SCREW, Tapping, .164-18x.437, (NOT SERVICED)
11	04854154	1				EP0			INSERT, Air Cleaner Noise
12									RESONATOR, Air Cleaner
	53030797	1				ER0			
	53030982	1				EP0			
13	53030796	1				ER0			BRACKET, Resonator
14	06033560	2				EP0, ER0			NUT AND WASHER, Hex Nut-Coned Washer, .25-20
15	06100288	2				EP0			BOLT AND CONED WASHER, Hex Head, M6x30x20
16	06030441	2							PIN, Retainer

CHEROKEE (XJ)

SERIES	LINE	BODY	ENGINE	TRANSMISSION
L = LOWLINE	T = JEEP - 2WD B = JEEP - 2WD (RHD) J = JEEP - 4WD U = JEEP - 4WD (RHD)	72 = SPORT UTILITY 2-DR 74 = SPORT UTILITY 4-DR	ENC = 2.5L 4 Cyl Turbo Diesel Engine EPB = 2.5L 4 Cylinder Engine EPE = Engine - 2.5L Power Tech I-4 Cyl. ERH = 4.0L Power Tech I-6 Engine	DDQ = 5-Speed Manual Transmission DGS = 4-Speed Automatic AW4 Transmission DGO = ALL AUTOMATIC TRANSMISSIONS DBB = ALL MANUAL TRANSMISSIONS

Air Cleaner
Figure 14-835

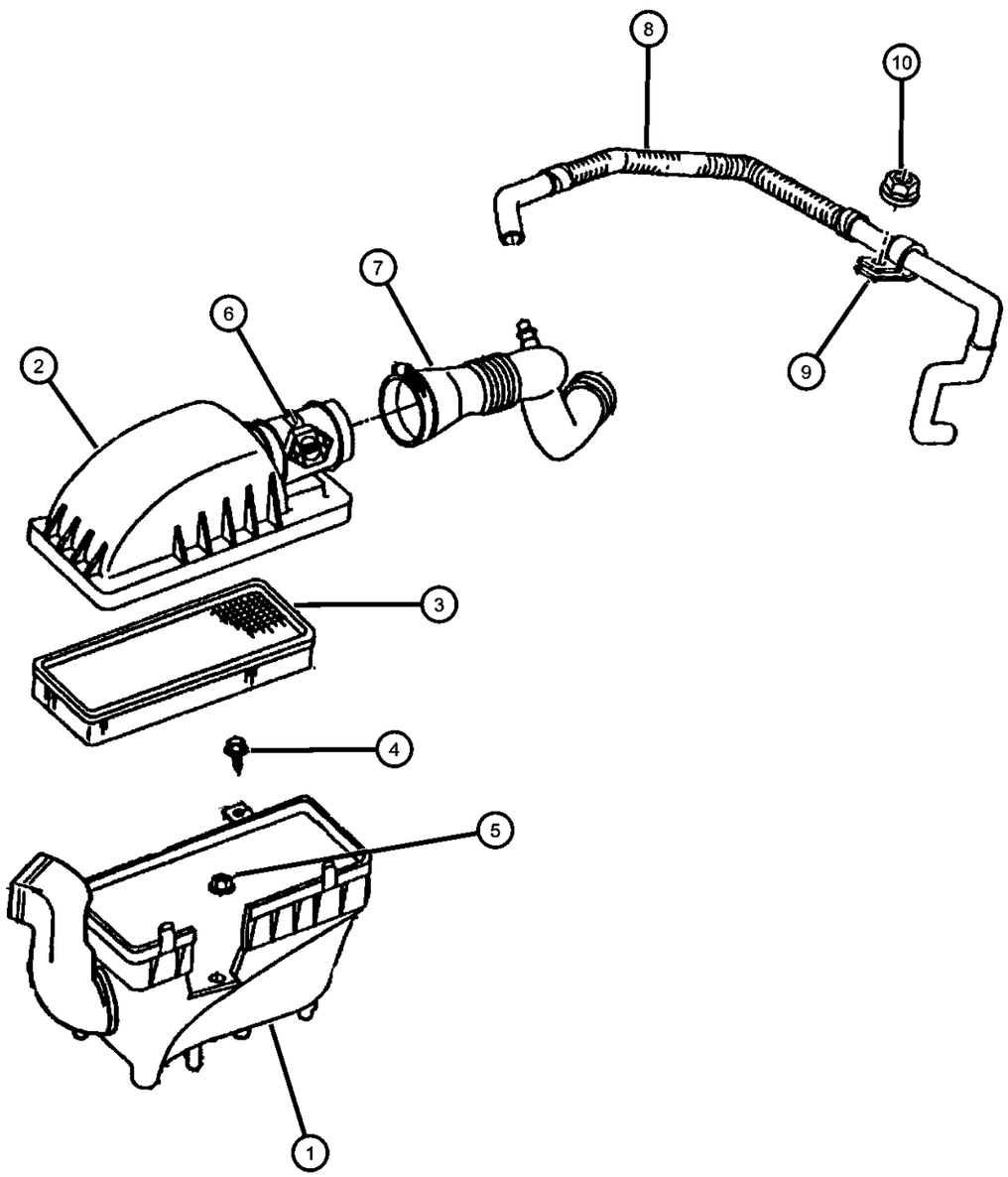

ITEM	PART NUMBER	QTY	LINE	SERIES	BODY	ENGINE	TRANS	TRIM	DESCRIPTION
NOTE: All 2.5L Diesel Engines									
1	53031036	1				EN0			BODY, Air Cleaner
2	53031037	1				EN0			COVER, Air Cleaner
3	53030730	1				EN0			ELEMENT, Air Cleaner
4	06035668	1				EN0			SCREW AND WASHER, Hex Head Tapping, .25-14x1
5	06501291	1				EN0			NUT AND WASHER, Hex Nut-Coned Washer, M8 x 1.25
6	04883258	1				EN0			SENSOR PACKAGE, Air Flow Meter
7	53030696	1				EN0			HOSE, Air Induction
8	04854047	1				EN0			TUBE, Oil Separator Drain
9	J4007577	1				EN0			CLIP
10	34201358	1				EN0			NUT AND WASHER, Hex Nut-Sealing Washer, M6 x 1.00

CHEROKEE (XJ)

SERIES	LINE	BODY	ENGINE	TRANSMISSION
L = LOWLINE	T = JEEP - 2WD B = JEEP - 2WD (RHD) J = JEEP - 4WD U = JEEP - 4WD (RHD)	72 = SPORT UTILITY 2-DR 74 = SPORT UTILITY 4-DR	ENC = 2.5L 4 Cyl Turbo Diesel Engine EPB = 2.5L 4 Cylinder Engine EPE = Engine - 2.5L Power Tech I-4 Cyl. ERH = 4.0L Power Tech I-6 Engine	DDQ = 5-Speed Manual Transmission DGS = 4-Speed Automatic AW4 Transmission DGO = ALL AUTOMATIC TRANSMISSIONS DBB = ALL MANUAL TRANSMISSIONS

Air Intake System
Figure 14-910

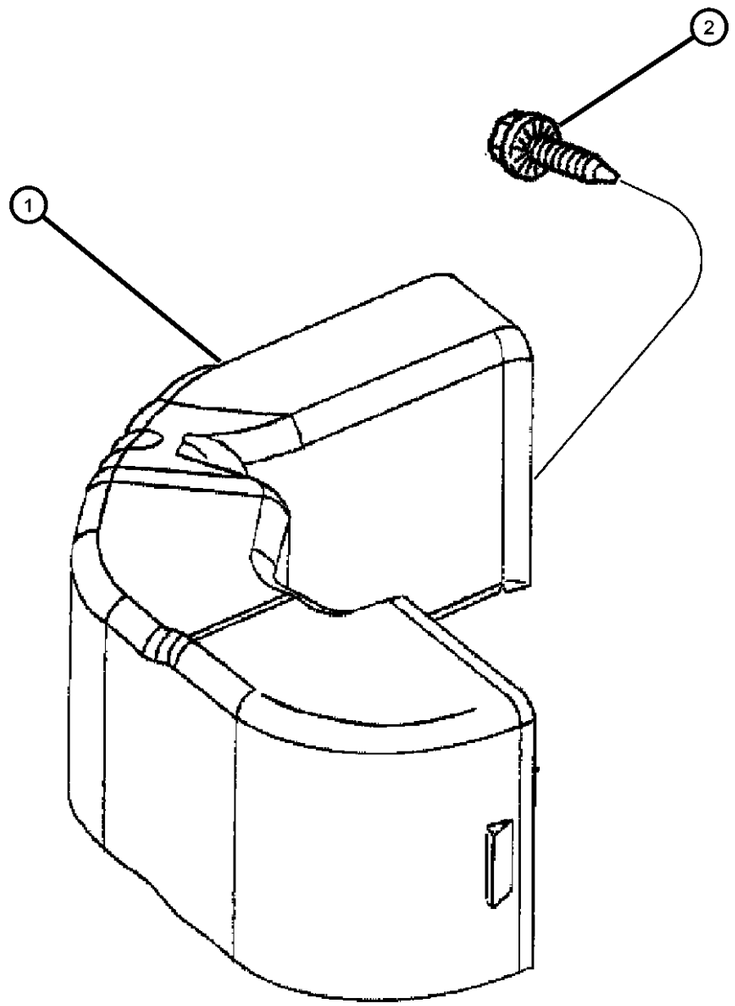

ITEM	PART NUMBER	QTY	LINE	SERIES	BODY	ENGINE	TRANS	TRIM	DESCRIPTION
NOTE: All 2.5L Gas Engines									
1	53030983	1				EP0			ADAPTER, Ambient Air
2	06030441	1				EP0			PIN, Retainer

CHEROKEE (XJ)

SERIES	LINE	BODY	ENGINE	TRANSMISSION
L = LOWLINE	T = JEEP - 2WD B = JEEP - 2WD (RHD) J = JEEP - 4WD U = JEEP - 4WD (RHD)	72 = SPORT UTILITY 2-DR 74 = SPORT UTILITY 4-DR	ENC = 2.5L 4 Cyl Turbo Diesel Engine EPB = 2.5L 4 Cylinder Engine EPE = Engine - 2.5L Power Tech I-4 Cyl. ERH = 4.0L Power Tech I-6 Engine	DDQ = 5-Speed Manual Transmission DGS = 4-Speed Automatic AW4 Transmission DGO = ALL AUTOMATIC TRANSMISSIONS DBB = ALL MANUAL TRANSMISSIONS

Speed Control
Figure 14-1010

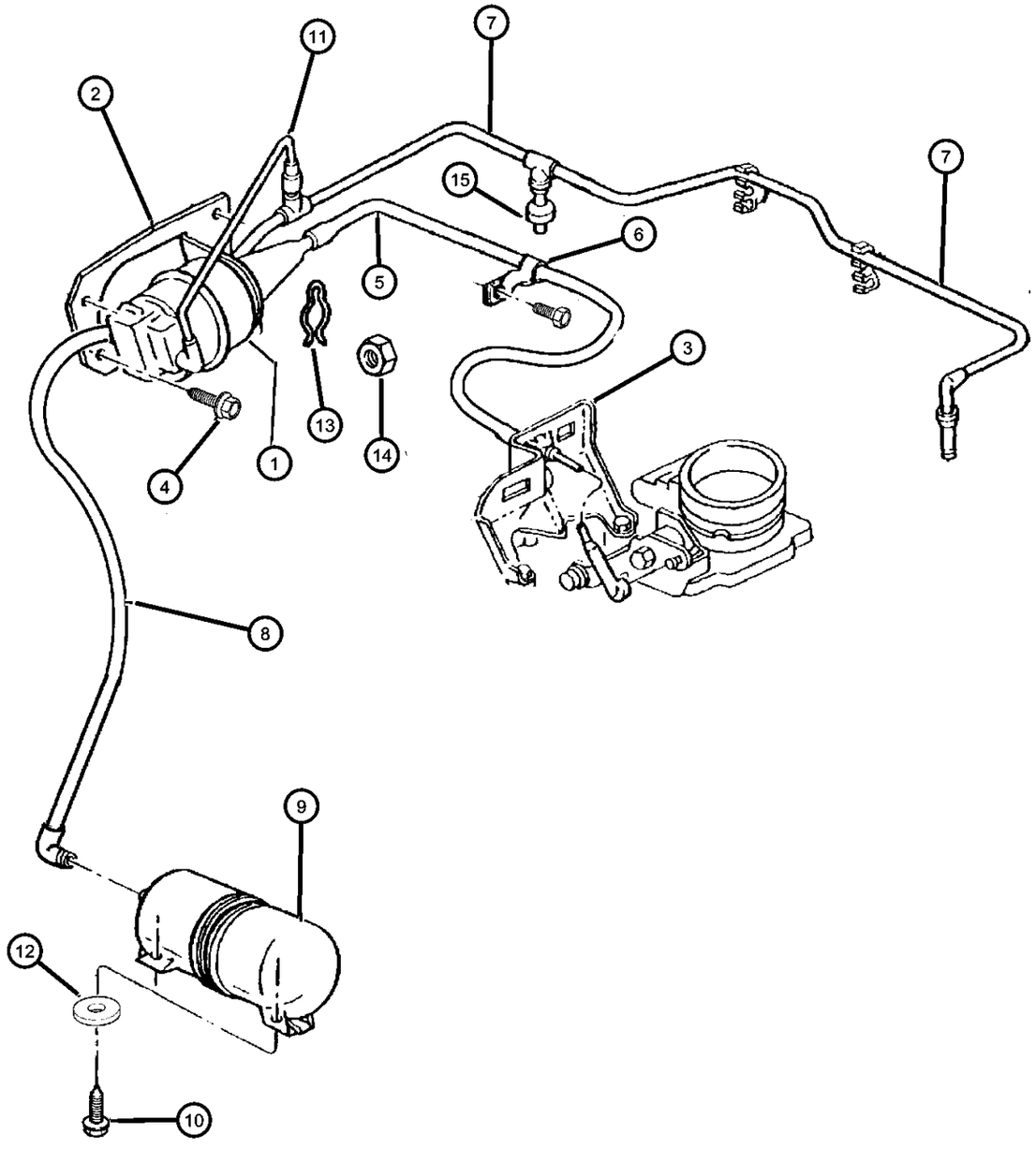

ITEM	PART NUMBER	QTY	LINE	SERIES	BODY	ENGINE	TRANS	TRIM	DESCRIPTION
NOTE: EP0=All 2.5L Gas Engines ER0=All 4.0L Engines									
1									SERVO, Speed Control
	04669979	1	J, T			EPE, ERH			
		1	B, U			EPE, ERH			
2	53007958	1	J, T			EPE, ERH			BRACKET, Speed Control Servo
3									BRACKET, Accelerator Cable
	53007485	1				EP0			
	53007486	1				ER0			
4	06035322	3	J, T			EPE, ERH			SCREW
5	04854001	1	J, T			EPE, ERH			CABLE, Speed Control
6	53009375	1	J, T			EPE, ERH			CLIP, Cable
7	53009375	1							VACUUM HARNESS, Heater and A/C, (NOT REQUIRED)
8									HOSE AND VALVE, Vacuum
	55036909	1	J, T			EP0			
	55036912AB	1	J, T			ER0			
	55036917AB	1	B, U			EP0			
	55036918AB	1	B, U			ER0			
9	55035902	1				EP0, ER0			RESERVOIR, Speed Control Vacuum
10	34201895	2							SCREW, Hex Head Tapping, M6.3x1.81x16.00
11	52078082	1	J, T			EPE, ERH			HARNESS, Speed Control Vacuum
12	52078082	1							WASHER, (NOT SERVICED)
13									CLIP, Cable
	06025867	1	J, T			EPE, ERH			
		1	B, U			EPE, ERH			
14									NUT, Hex Flange Serration, M6x1
	06502493	2	J, T			EPE, ERH			
		2	B, U			EPE, ERH			
15		2							VALVE, Check, 1/4, Serviced in Hose Assembly, (NOT SERVICED)
-16	04549209	1	B, U			EP0			VALVE PACKAGE, Check

CHEROKEE (XJ)

SERIES	LINE	BODY	ENGINE	TRANSMISSION
L = LOWLINE	T = JEEP - 2WD B = JEEP - 2WD (RHD) J = JEEP - 4WD U = JEEP - 4WD (RHD)	72 = SPORT UTILITY 2-DR 74 = SPORT UTILITY 4-DR	ENC = 2.5L 4 Cyl Turbo Diesel Engine EPB = 2.5L 4 Cylinder Engine EPE = Engine - 2.5L Power Tech I-4 Cyl. ERH = 4.0L Power Tech I-6 Engine	DDQ = 5-Speed Manual Transmission DGS = 4-Speed Automatic AW4 Transmission DGO = ALL AUTOMATIC TRANSMISSIONS DBB = ALL MANUAL TRANSMISSIONS

Accelerator Pedal
Figure 14-1110

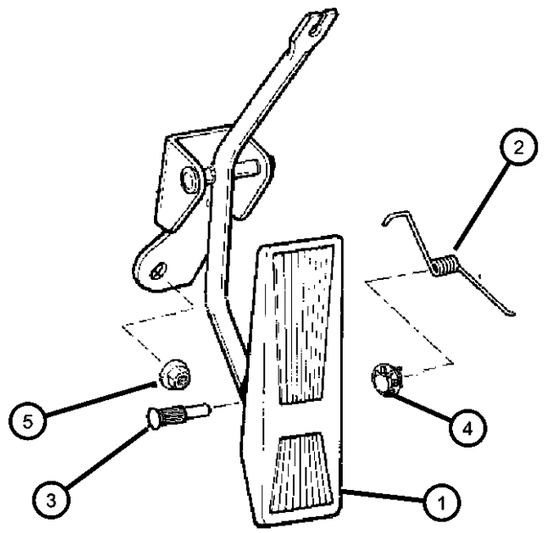

ITEM	PART NUMBER	QTY	LINE	SERIES	BODY	ENGINE	TRANS	TRIM	DESCRIPTION
NOTE: EP0=All 2.5L Gas Engines EN0=2.5L Diesel Engines ER0=All 4.0L Engines									
1									PEDAL, Accelerator
	52079117	1	B, U			EN0			No Components Available
	52079206	1	J, T			EP0, ER0			
	52079207	1	B, U			EP0, ER0			
	52079216	1	J, T			EN0			No Components Available
2									SPRING, Torsion
	53030874	1	J, T			EP0, ER0			
		1	B, U			EP0, ER0			
3									PIN, Accelerator Pedal Mtg.
	52079019	1	J, T			EP0, ER0			
		1	B, U			EP0, ER0			
4									BUSHING, Accelerator Pedal
	52078653	2	J, T			EP0, ER0			
		2	B, U			EP0, ER0			
5	11503745	2							NUT, Hex, M6x1

CHEROKEE (XJ)

SERIES	LINE	BODY	ENGINE	TRANSMISSION
L = LOWLINE	T = JEEP - 2WD B = JEEP - 2WD (RHD) J = JEEP - 4WD U = JEEP - 4WD (RHD)	72 = SPORT UTILITY 2-DR 74 = SPORT UTILITY 4-DR	ENC = 2.5L 4 Cyl Turbo Diesel Engine EPB = 2.5L 4 Cylinder Engine EPE = Engine - 2.5L Power Tech I-4 Cyl. ERH = 4.0L Power Tech I-6 Engine	DDQ = 5-Speed Manual Transmission DGS = 4-Speed Automatic AW4 Transmission DGO = ALL AUTOMATIC TRANSMISSIONS DBB = ALL MANUAL TRANSMISSIONS

Group - 16

Propeller Shafts and U-Joints

016-100 Propeller Shaft 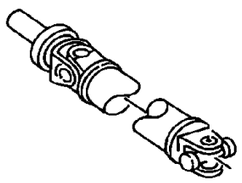			

Group - 16 Propeller Shafts and U-Joints

Illustration Title — Group-Fig. No.

Propeller Shaft

Propeller Shaft,Front ..... Fig. 16 - 110
Propeller Shaft,Rear ..... Fig. 16 - 120

Propeller Shaft,Front
Figure 16-110

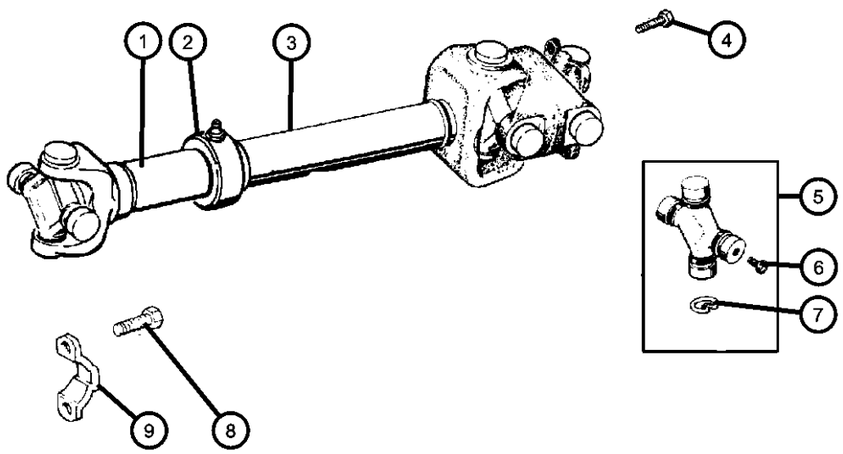

ITEM	PART NUMBER	QTY	LINE	SERIES	BODY	ENGINE	TRANS	TRIM	DESCRIPTION
Note: Sales Codes;									
DBB= Transmissions - All Manual									
DG0 = Transmissions - All Automatic									
EN0=Engines - All 4/5 Cylinder Turbo Diesel									
EP0=Engines -All 2.5L 4 Cylinder Gas									
ER0=Engines - All 4.0L 6 Cylinder Gas									
1									YOKE, Drive Shaft
	83501594	1	J, U			EN0			
		1	J, U			EP0			
		1	J, U			ER0	DG0		
		1	J, U			ER0	DBB		
2									SEAL, Drive Shaft Yoke
	83501595	1	J, U			EN0			
		1	J, U			EP0			
		1	J, U			ER0	DG0		
		1	J, U			ER0	DBB		
3									SHAFT, Front Drive
	52098208	1	J, U			EN0			
	53005541	1	J, U			EP0			
	53005542	1	J, U			ER0	DG0		
	53005543	1	J, U			ER0	DBB		
4	06034966	4	J, U						BOLT, .312-24x1.170, Drive Shaft to Transfer Case Yoke, Mounting
5									U-JOINT
	04882793	3	J, U			EN0			As Required
		1	J, U			EP0			As Required
		1	J, U			ER0	DG0		As Required
		1	J, U			ER0	DBB		As Required
6	83507064	1	J, T						FITTING PACKAGE, Grease, As Required
7									RING, U Joint
	J3207886	4	J, U			EN0			
		4	J, U			EP0			
		4	J, U			ER0	DG0		
		4	J, U			ER0	DBB		

CHEROKEE (XJ)

SERIES	LINE	BODY	ENGINE	TRANSMISSION
L = LOWLINE	T = JEEP - 2WD B = JEEP - 2WD (RHD) J = JEEP - 4WD U = JEEP - 4WD (RHD)	72 = SPORT UTILITY 2-DR 74 = SPORT UTILITY 4-DR	ENC = 2.5L 4 Cyl Turbo Diesel Engine EPB = 2.5L 4 Cylinder Engine EPE = Engine - 2.5L Power Tech I-4 Cyl. ERH = 4.0L Power Tech I-6 Engine	DDQ = 5-Speed Manual Transmission DGS = 4-Speed Automatic AW4 Transmission DGO = ALL AUTOMATIC TRANSMISSIONS DBB = ALL MANUAL TRANSMISSIONS

Propeller Shaft,Front
Figure 16-110

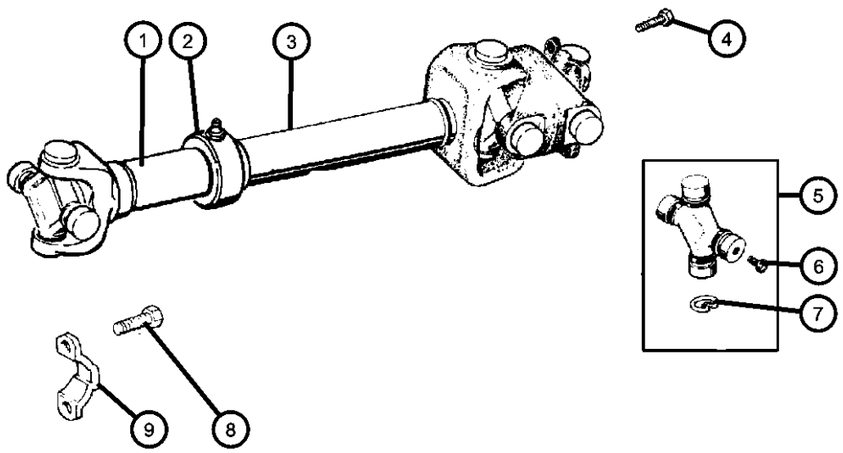

ITEM	PART NUMBER	QTY	LINE	SERIES	BODY	ENGINE	TRANS	TRIM	DESCRIPTION
8	J4006928	4							BOLT, Drive Shaft to Front Axle Yoke, Mounting
9	J3240553	2	J, U						STRAP, Prop Shaft, Drive Shaft to Front Axle Yoke, Mounting

CHEROKEE (XJ)

SERIES	LINE	BODY	ENGINE	TRANSMISSION
L = LOWLINE	T = JEEP - 2WD B = JEEP - 2WD (RHD) J = JEEP - 4WD U = JEEP - 4WD (RHD)	72 = SPORT UTILITY 2-DR 74 = SPORT UTILITY 4-DR	ENC = 2.5L 4 Cyl Turbo Diesel Engine EPB = 2.5L 4 Cylinder Engine EPE = Engine - 2.5L Power Tech I-4 Cyl. ERH = 4.0L Power Tech I-6 Engine	DDQ = 5-Speed Manual Transmission DGS = 4-Speed Automatic AW4 Transmission DGO = ALL AUTOMATIC TRANSMISSIONS DBB = ALL MANUAL TRANSMISSIONS

Propeller Shaft,Rear
Figure 16-120

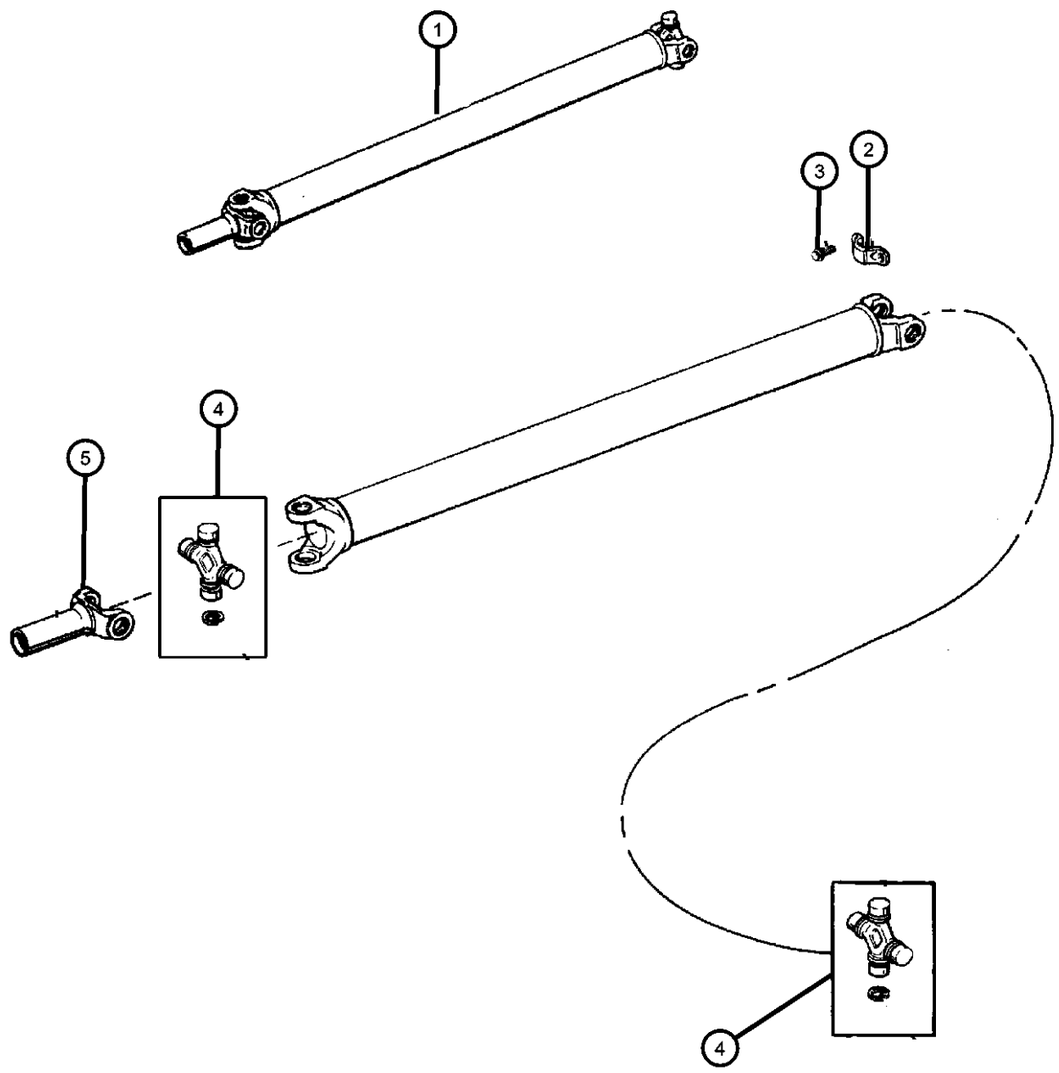

ITEM	PART NUMBER	QTY	LINE	SERIES	BODY	ENGINE	TRANS	TRIM	DESCRIPTION
Note: Sales Codes;									
DHN =Command-Trac Part Time 4WD System									
DRA= Axle - Rear, Corporate 8.25									
DRJ= Axle - Rear, Dana M35/194MM RBI									
DRM= Axle - Rear, Dana 35C/194MM									
EN0=Engines - All 4/5 Cylinder Turbo Diesel									
EP0=Engines -All 2.5L 4 Cylinder Gas									
ER0=Engines - All 4.0L 6 Cylinder Gas									
1									SHAFT, Drive
	52098731	1	J, U			ER0	DG0		[DRJ,DRM]
	52098732	1	J, U			ER0	DBB		[DRA]
	52098744	1	J, U			EP0			[DRA]
	52098814	1	J, U			ER0	DG0		[DRA]
	52099056	1	B			ER0	DG0		[DRA]
	52099057	1	B, T			EP0	DBB		[DRA]
	52099422	1	J, U			EN0	DBB		[DRJ,DRM,DHN]
	52111067	1	B, T			ER0	DBB		[DRA]
	52111068	1	B, T			ER0	DBB		[DRJ,DRM]
	52111070	1	B, T			EP0	DBB		[DRJ]
2	J3240553	2	J, U						STRAP, Prop Shaft
3	J4006928	4	J, U						BOLT
4									U-JOINT
	04746936	1	J, U			EN0	DBB		[DRJ,DRM,DHN], Front
		1	B, T			ER0	DBB		[DRJ,DRM], Front
		1	B, T			EP0	DBB		[DRJ], Front
	04882793	1	J, U			ER0	DG0		[DRJ,DRM], Front or Rear
		1	J, U			EP0			[DRA], Front or Rear
		1	J, U			EN0	DBB		[DRJ,DRM,DHN], Rear
		1	B, T			ER0	DBB		[DRJ,DRM], Rear
		1	B, T			EP0	DBB		[DRJ], Rear
		2	B, T			ER0	DG0		[DRA], Front or Rear
		2	B, T			EP0	DBB		[DRA], Front or Rear
		1	J, U			ER0	DBB		[DRA], Front or Rear
		1	J, U			ER0	DG0		[DRA], Front or Rear
		1	B, T			ER0	DBB		[DRA], Front or Rear

CHEROKEE (XJ)

SERIES	LINE	BODY	ENGINE	TRANSMISSION
L = LOWLINE	T = JEEP - 2WD B = JEEP - 2WD (RHD) J = JEEP - 4WD U = JEEP - 4WD (RHD)	72 = SPORT UTILITY 2-DR 74 = SPORT UTILITY 4-DR	ENC = 2.5L 4 Cyl Turbo Diesel Engine EPB = 2.5L 4 Cylinder Engine EPE = Engine - 2.5L Power Tech I-4 Cyl. ERH = 4.0L Power Tech I-6 Engine	DDQ = 5-Speed Manual Transmission DGS = 4-Speed Automatic AW4 Transmission DGO = ALL AUTOMATIC TRANSMISSIONS DBB = ALL MANUAL TRANSMISSIONS

Propeller Shaft,Rear
Figure 16-120

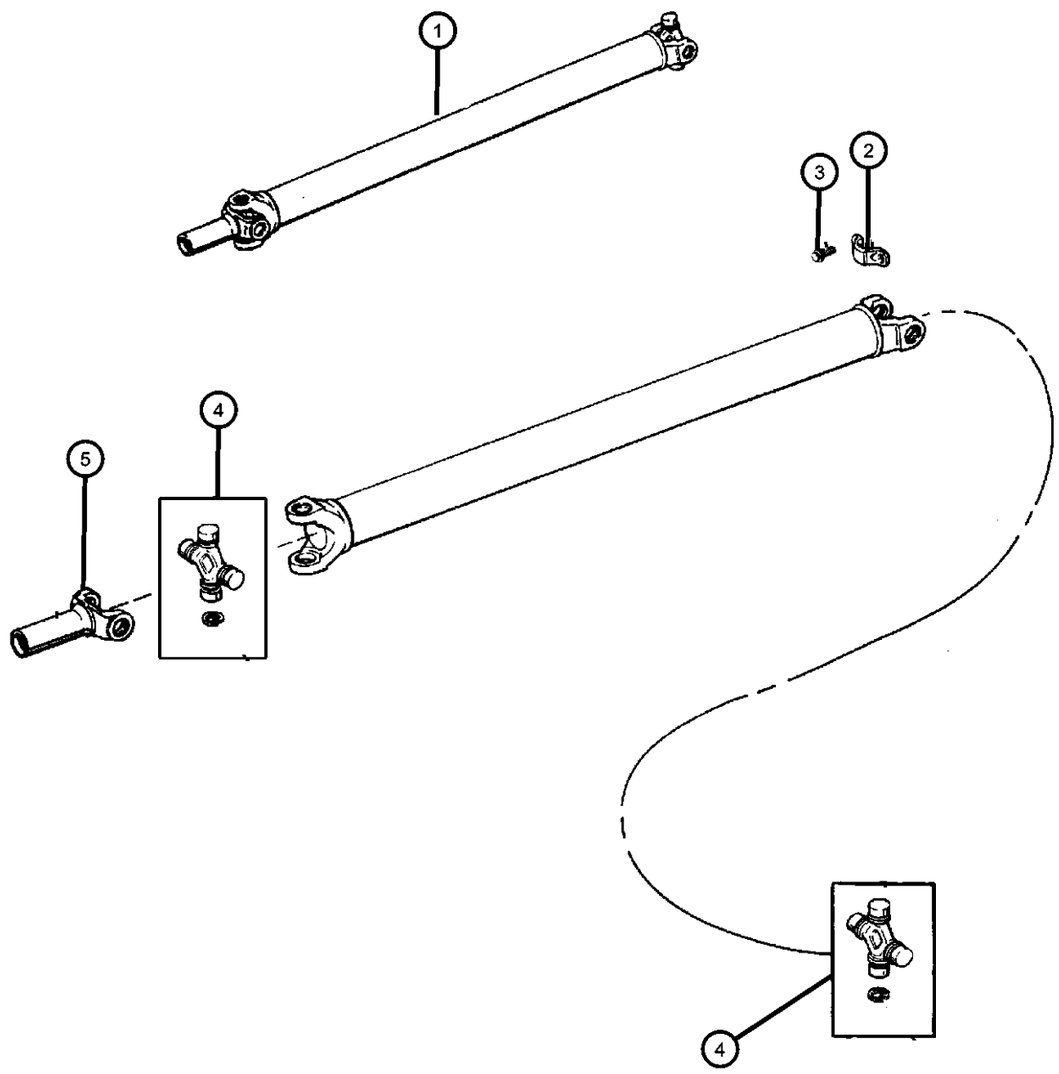

ITEM	PART NUMBER	QTY	LINE	SERIES	BODY	ENGINE	TRANS	TRIM	DESCRIPTION
5									YOKE, Drive Shaft
	04882714	1	J, U			EP0			[DRA]
		1	J, U			ER0	DG0		[DRJ,DRM]
		1	J, U			ER0	DBB		[DRA]
		1	J, U			ER0	DG0		[DRA]
	05012918AA	1	J, U			EN0	DBB		[DRJ,DRM]
	05013471AA	1	B, T			ER0	DBB		[DRA]
		1	B, T			ER0	DBB		[DRJ,DRM]
	53001987	1	B, T			EP0	DBB		[DRA]
		1	B, T			EP0	DBB		[DRJ]
	83503593	1	B, T			ER0	DG0		[DRA]

CHEROKEE (XJ)

SERIES	LINE	BODY	ENGINE	TRANSMISSION
L = LOWLINE	T = JEEP - 2WD B = JEEP - 2WD (RHD) J = JEEP - 4WD U = JEEP - 4WD (RHD)	72 = SPORT UTILITY 2-DR 74 = SPORT UTILITY 4-DR	ENC = 2.5L 4 Cyl Turbo Diesel Engine EPB = 2.5L 4 Cylinder Engine EPE = Engine - 2.5L Power Tech I-4 Cyl. ERH = 4.0L Power Tech I-6 Engine	DDQ = 5-Speed Manual Transmission DGS = 4-Speed Automatic AW4 Transmission DGO = ALL AUTOMATIC TRANSMISSIONS DBB = ALL MANUAL TRANSMISSIONS

Group - 17

Rear Suspension

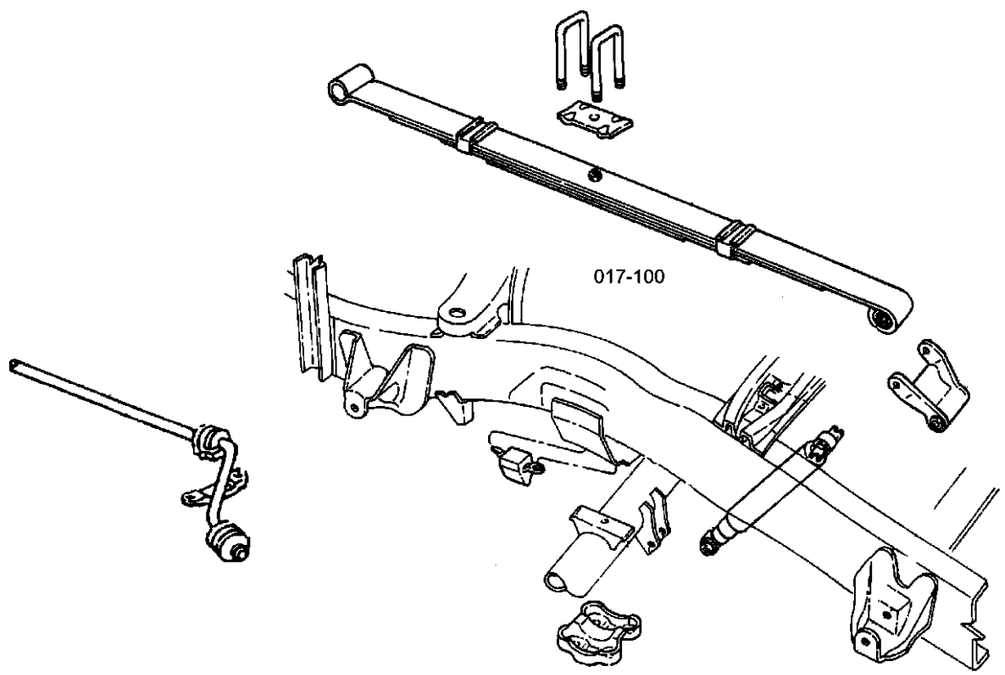

017-100 Rear Suspension 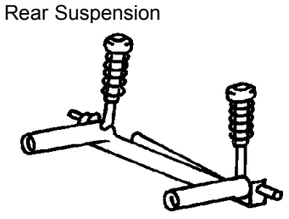			

Group - 17 Rear Suspension

Illustration Title — Group-Fig. No.

Rear Suspension

Suspension, Rear and Shock Absorber ..... Fig. 17 - 110

Suspension, Rear and Shock Absorber
Figure 17-110

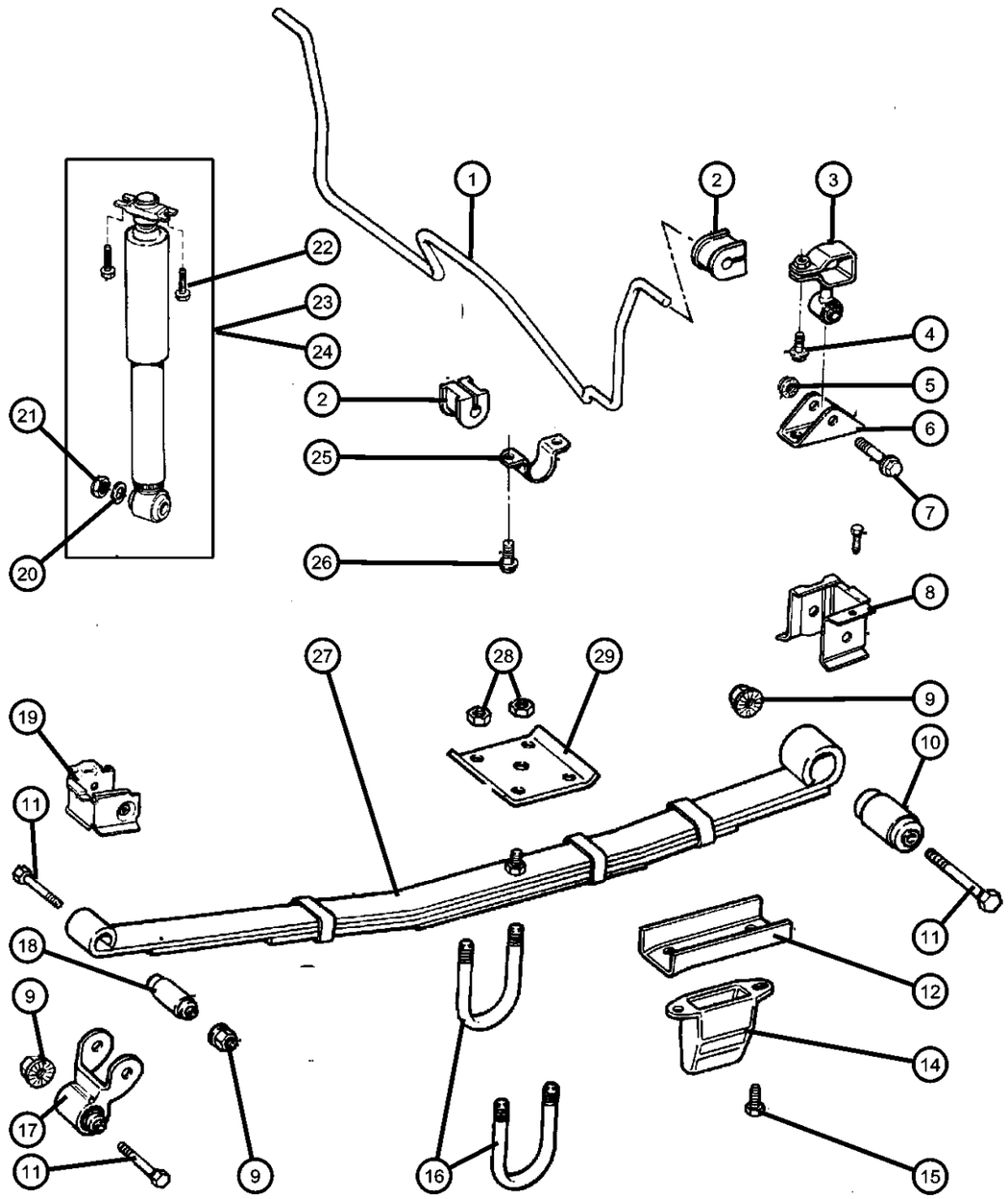

ITEM	PART NUMBER	QTY	LINE	SERIES	BODY	ENGINE	TRANS	TRIM	DESCRIPTION

Note:Sales Codes:
[DRA]=Axle - Rear,Corportate 8.25
[DRJ]=Axle - Rear,Dana M35/194MM
[DRM]=Axle - Rear,Dana 35C /194MM
[SDA]=Suspension - Normal Duty
[SDB]=Suspension - Heavy Duty
[SDU]=Shocks - High Pressure Gas Charged
Check VIN Number for The Type of 'Z' Code Springs are on The Truck

ITEM	PART NUMBER	QTY	LINE	SERIES	BODY	ENGINE	TRANS	TRIM	DESCRIPTION
1	52001135	1							BAR, Rear Sway, Without [SDU]
2	52001145	4							CUSHION, Sway Eliminator, Without [SDU]
3	52001094	2							LINK, Sway Eliminator, Without [SDU]
4	34201686	2							BOLT, Hex Flange Head, M12x1.18x35, Without [SDU]
5	06502697	2							NUT, Hex Flange Lock, M12x1.75, Without [SDU]
6	52006450	2							BRACKET, Stabilizer Bar, Without [SDU]
7	11505098	2							BOLT, Hex Flange Head, M12x1.75x60, Without [SDU]
8									BRACKET, Spring
	55001100	1							Right Front
	55001101	1							Left Front
9									NUT, Hex Flange Lock, M14z2
	11502814	4							Rear Spring Rear, Mounting
		2							Rear Spring Front, Mounting
10	52000503	1							BUSHING, Spring, Rear Spring Front
11	34202118	6							BOLT, Hex Flange Head, M14x2.0x120, Rear Spring Front and Rear
12	52002386	2	J, U						REINFORCEMENT, Jounce Bumper, [SDU], Mounting
-13	J4005293	2	J, U						RETAINER, Push In Type M6.3 Hole, [SDU], Mounting
14									BUMPER, Jounce
	52002393	2	J, U						[SDU]
	52004297	2							Without [SDU]
15	J4001933	2							SCREW, Hex Flange Head, .312-x18x.875, Jounce Bumper, Mounting

CHEROKEE (XJ)

SERIES	LINE	BODY	ENGINE	TRANSMISSION
L = LOWLINE	T = JEEP - 2WD B = JEEP - 2WD (RHD) J = JEEP - 4WD U = JEEP - 4WD (RHD)	72 = SPORT UTILITY 2-DR 74 = SPORT UTILITY 4-DR	ENC = 2.5L 4 Cyl Turbo Diesel Engine EPB = 2.5L 4 Cylinder Engine EPE = Engine - 2.5L Power Tech I-4 Cyl. ERH = 4.0L Power Tech I-6 Engine	DDQ = 5-Speed Manual Transmission DGS = 4-Speed Automatic AW4 Transmission DGO = ALL AUTOMATIC TRANSMISSIONS DBB = ALL MANUAL TRANSMISSIONS

Suspension, Rear and Shock Absorber
Figure 17-110

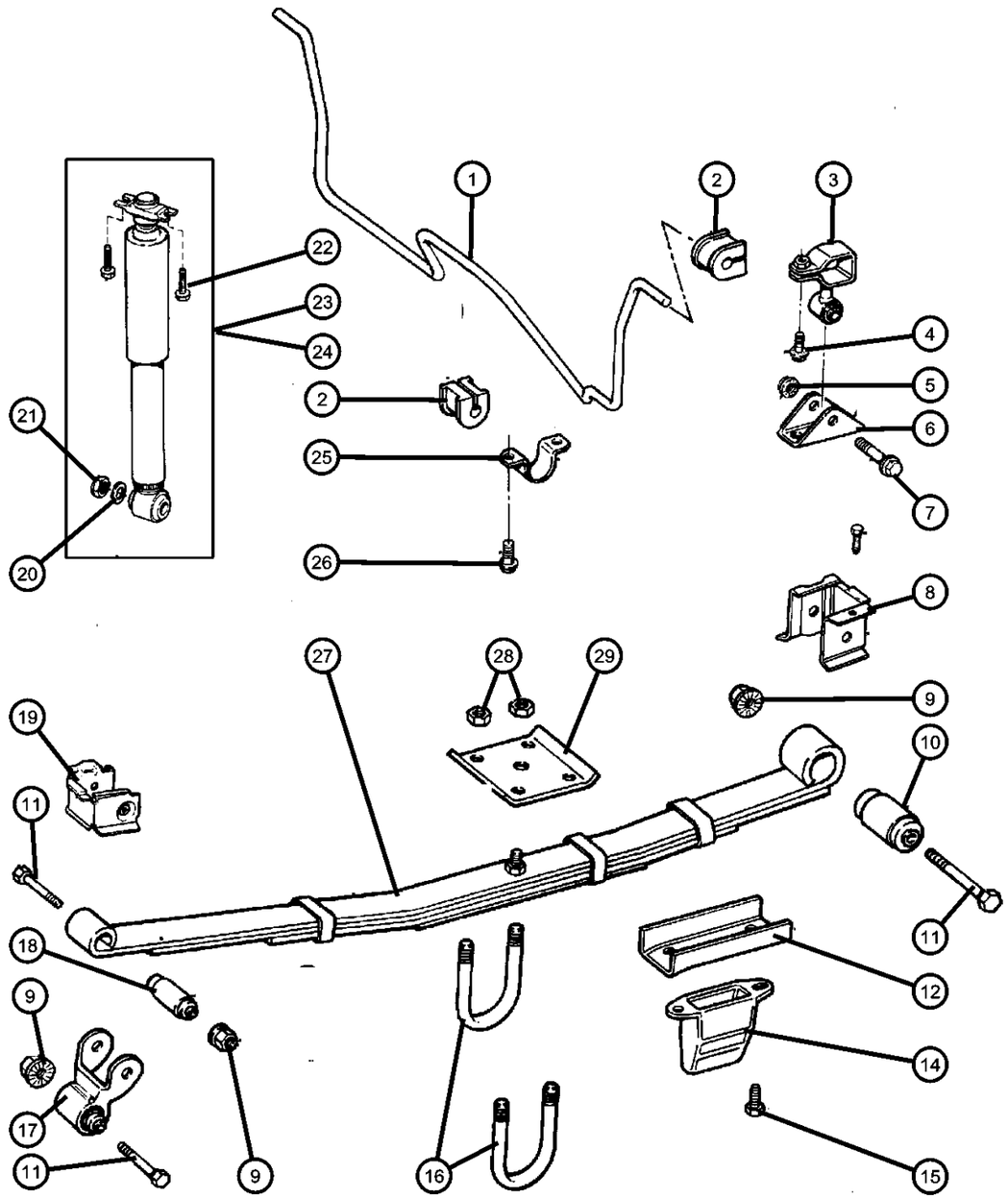

ITEM	PART NUMBER	QTY	LINE	SERIES	BODY	ENGINE	TRANS	TRIM	DESCRIPTION
16									U-BOLT, Rear Spring
	52004010	4							[DRA]
	52006440	4							[DRJ,DRM]
17	52000507	2							SHACKLE, Spring
18	52000504	1							BUSHING, Spring, Rear Spring Rear
19									BRACKET, Spring
	55001102	1							Right Rear
	55001103	1							Left Rear
20	55001103	1							WASHER, Shock Absorber, Order shock, (NOT SERVICED)
21	06101688	2							NUT, Hex Lock, M12x1.75, Shock, Mounting
22	J4001933	4							SCREW, Hex Flange Head, .312-x18x.875, Shock, Mounting
23									SHOCK ABSORBER, Suspension
	52087777	2							[SDA]
	52087948	2							[SDB]
24	04886509AA	2	J, U						SHOCK ABSORBER PACKAGE, Suspension, [SDU]
25	52087865	2							RETAINER, Stabilizer Bar GrommetMounting
26	34201540	4							BOLT AND WASHER, Implement Attaching, Sway Bar Retainer, Mounting
27									SPRING, Rear Leaf
	52000050AB	1							[ZFS,ZUS]
	52000051AB	1							[ZFT,ZUT]
	52000544AB	1							[ZGS,ZVS]
	52000545AB	1							[ZGT,ZVT]
	52000706AB	1							[ZFU,ZUU]
	52000707AB	1							[ZGU,ZVU]
	52002390AB	1							[ZGV,ZVV]
	52002392AB	1							[ZGW,ZVW]
28	06502697	8							NUT, Hex Flange Lock, M12x1.75, U-Bolt, Mounting
29	52006449	2							PLATE, U BoltMounting

CHEROKEE (XJ)

SERIES	LINE	BODY	ENGINE	TRANSMISSION
L = LOWLINE	T = JEEP - 2WD B = JEEP - 2WD (RHD) J = JEEP - 4WD U = JEEP - 4WD (RHD)	72 = SPORT UTILITY 2-DR 74 = SPORT UTILITY 4-DR	ENC = 2.5L 4 Cyl Turbo Diesel Engine EPB = 2.5L 4 Cylinder Engine EPE = Engine - 2.5L Power Tech I-4 Cyl. ERH = 4.0L Power Tech I-6 Engine	DDQ = 5-Speed Manual Transmission DGS = 4-Speed Automatic AW4 Transmission DGO = ALL AUTOMATIC TRANSMISSIONS DBB = ALL MANUAL TRANSMISSIONS

Group - 19

Steering

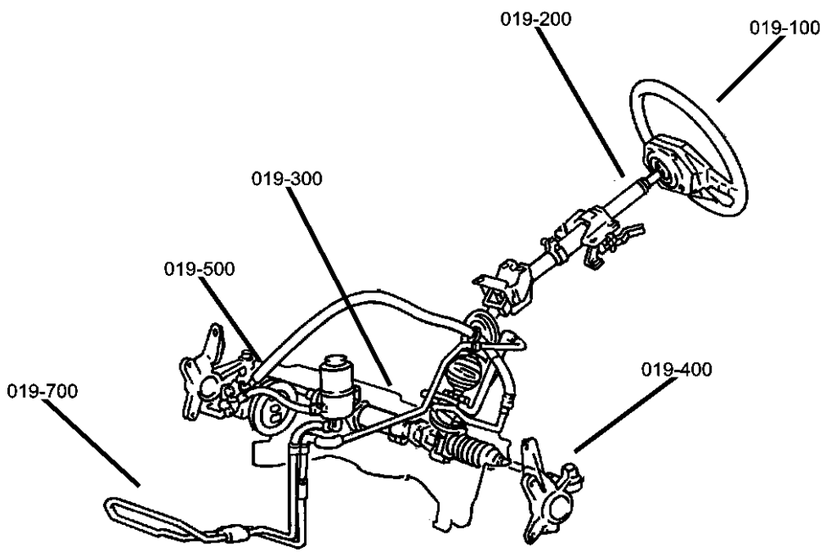

019-100 Steering Wheel 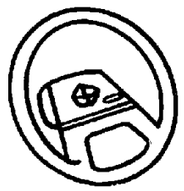	**019-200** Steering Column 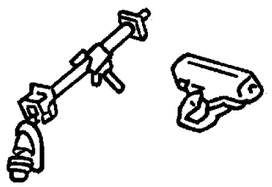	**019-300** Steering Gear 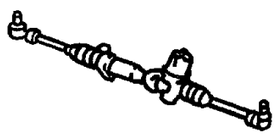	**019-400** Steering Linkage 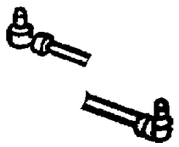
019-500 Power Steering Pump 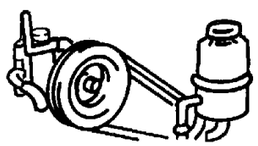	**019-700** Power Steering Hoses 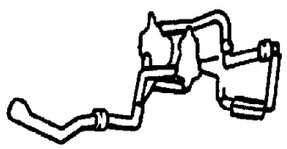		

Group - 19 Steering

Illustration Title — Group-Fig. No.

Steering Wheel
Wheel Steering ..... Fig. 19 - 110

Steering Column
Column,Steering,Upper and Lower ..... Fig. 19 - 210

Steering Gear
Gear, Steering ..... Fig. 19 - 320

Steering Linkage
Linkage and Damper ..... Fig. 19 - 410

Power Steering Pump
Pump and Mounting, with 2.5L Gas Engine ..... Fig. 19 - 530
Pump and Mounting, with 4.0L Engine ..... Fig. 19 - 535
Pump and Mounting, with 2.5L Diesel Engine ..... Fig. 19 - 545

Power Steering Hoses
Hose and Reservoir, with 2.5L Gas Engine, Left Hand Drive ..... Fig. 19 - 720
Hoses and Reservoir, with 2.5L Gas Engine, Right Hand Drive ..... Fig. 19 - 730
Hoses and Reservoir, with 4.0L Engine ..... Fig. 19 - 740
Hoses and Reservoir, with 2.5L Diesel Engine ..... Fig. 19 - 750

Wheel Steering
Figure 19-110

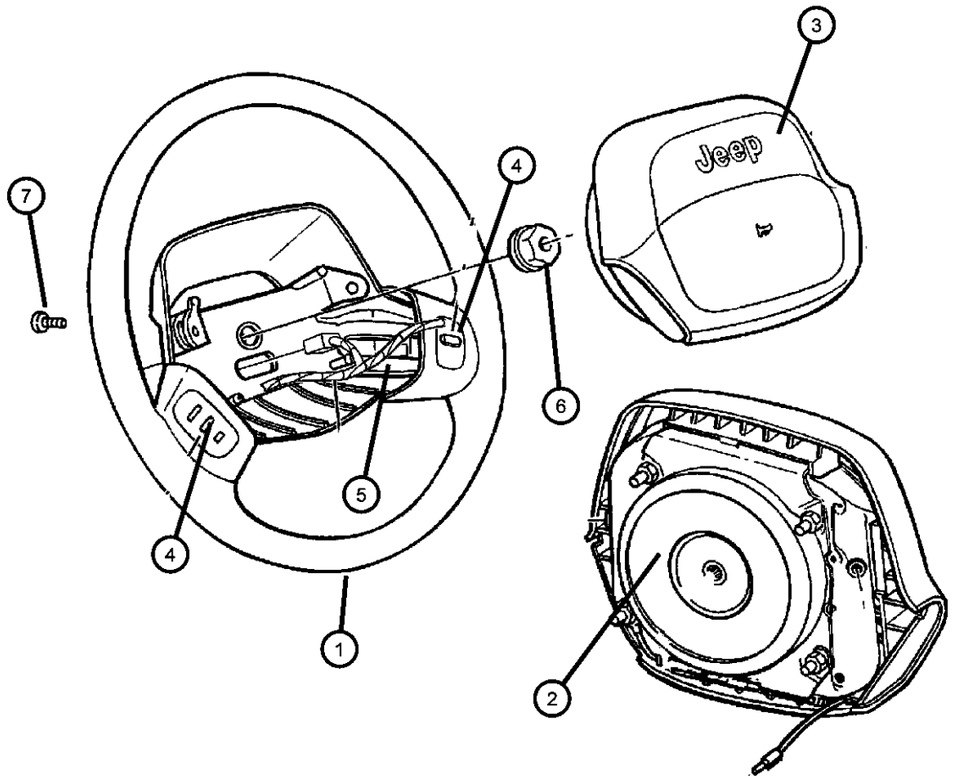

ITEM	PART NUMBER	QTY	LINE	SERIES	BODY	ENGINE	TRANS	TRIM	DESCRIPTION
Note:If Horn Switch is defective, you must replace the AIR BAG COVER WITH SWITCH and not the AIR BAG MODULE ASSEMBLY itself.									
1									WHEEL, Steering
	5DY22LAZ	1							[SCG,NHM]
	5DR10TAZ	1							[SCG]
	5DR11TAZ	1							[SCD]
2									AIR BAG, Driver
	5EA02LAZ	1							With [NHM]
	5DS48TAZ	1							Without [NHM]
3									COVER, Air Bag Module
	04798182	1							Without [NHM] With Horn Switch
	04798297	1							With [NHM] With Horn Switch
4									SWITCH, Speed Control
	56007530AB	1							With [NHM], Right
	56007531AB	1							With [NHM], Left
5	56009437	1							WIRING, Steering Wheel, With [NHM]
6	04690339	1					DG0		NUT, Hex Lock, M14x1.5, Steering Wheel, Mounting
7	06503262	2							SCREW, Hex Flange Head, M6x1.00x20.00, Air Bag Module, Mounting

CHEROKEE (XJ)

SERIES	LINE	BODY	ENGINE	TRANSMISSION
L = LOWLINE	T = JEEP - 2WD B = JEEP - 2WD (RHD) J = JEEP - 4WD U = JEEP - 4WD (RHD)	72 = SPORT UTILITY 2-DR 74 = SPORT UTILITY 4-DR	ENC = 2.5L 4 Cyl Turbo Diesel Engine EPB = 2.5L 4 Cylinder Engine EPE = Engine - 2.5L Power Tech I-4 Cyl. ERH = 4.0L Power Tech I-6 Engine	DDQ = 5-Speed Manual Transmission DGS = 4-Speed Automatic AW4 Transmission DGO = ALL AUTOMATIC TRANSMISSIONS DBB = ALL MANUAL TRANSMISSIONS

Column,Steering,Upper and Lower
Figure 19-210

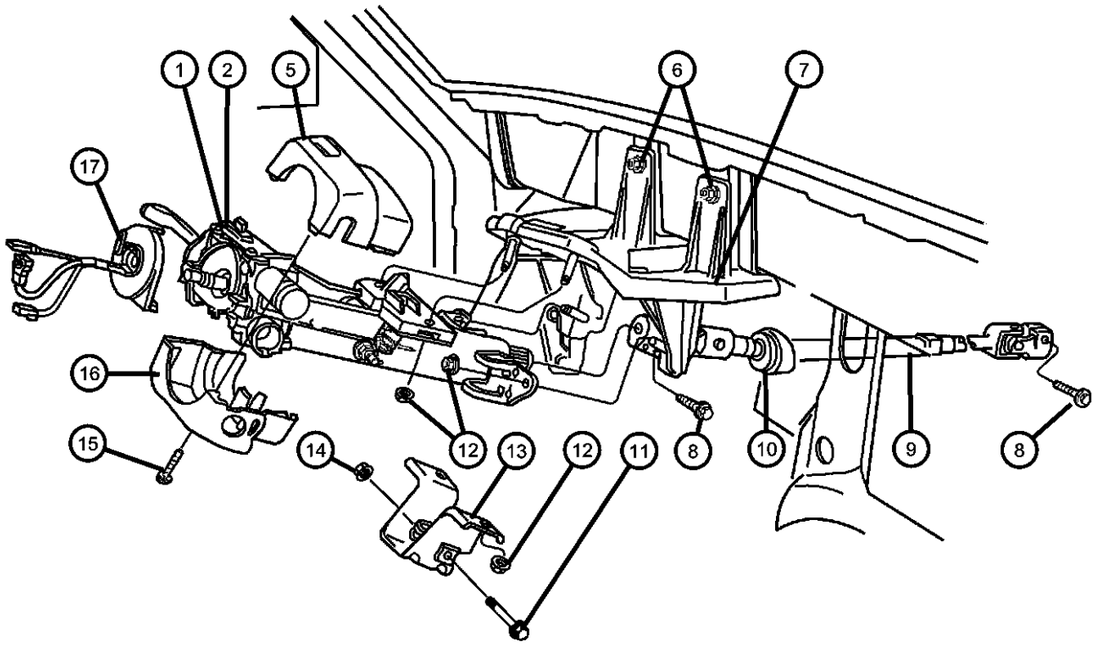

ITEM	PART NUMBER	QTY	LINE	SERIES	BODY	ENGINE	TRANS	TRIM	DESCRIPTION
Note:Sales Codes; [DBB]=Transmissions - All Manual [DG0]=Transmissions - All Automatic [NHM]= Speed Control [SUA]=Steering Column - Tilt									
1									COLUMN, Steering, Non tilt
	04874810	1					DG0		
	04874811	1					DBB		
2									COLUMN, Steering, Tilt
	04874814	1					DG0		
	04874815	1					DBB		
-3									LEVER, Tilt Column Release
	04690372AB	1					DG0		
		1					DBB		
-4									SHIELD, Steering Column
	52079332	1					DG0		
		1					DBB		
5									SHROUD, Steering Column
	5FV71LAZ	1					DG0		with [SUA], Upper
		1					DBB		with [SUA], Upper
	5FV74LAZ	1					DG0		without [SUA], Upper
		1					DBB		without [SUA], Upper
6	06501279	2							NUT, Hex Flange Lock, M8x1.25, Bracket to Body, Mounting
7									BRACKET, Steering Column
	52078853	1	J, T						
	52078930	1	B, U						
8	06503210	2							SCREW, Hex Flange Head, M10x1.5x35.
9	52079010	1							SHAFT, Intermediate
10	55314949AB	1							SEAL, Steering Column Shaft
11	06504698	1							SCREW AND WASHER
12	06501279	4							NUT, Hex Flange Lock, M8x1.25, Column to Bracket, Mounting
13	55314962	1							BRACKET, Steering Column, without [SUA], Upper

CHEROKEE (XJ)

SERIES	LINE	BODY	ENGINE	TRANSMISSION
L = LOWLINE	T = JEEP - 2WD B = JEEP - 2WD (RHD) J = JEEP - 4WD U = JEEP - 4WD (RHD)	72 = SPORT UTILITY 2-DR 74 = SPORT UTILITY 4-DR	ENC = 2.5L 4 Cyl Turbo Diesel Engine EPB = 2.5L 4 Cylinder Engine EPE = Engine - 2.5L Power Tech I-4 Cyl. ERH = 4.0L Power Tech I-6 Engine	DDQ = 5-Speed Manual Transmission DGS = 4-Speed Automatic AW4 Transmission DGO = ALL AUTOMATIC TRANSMISSIONS DBB = ALL MANUAL TRANSMISSIONS

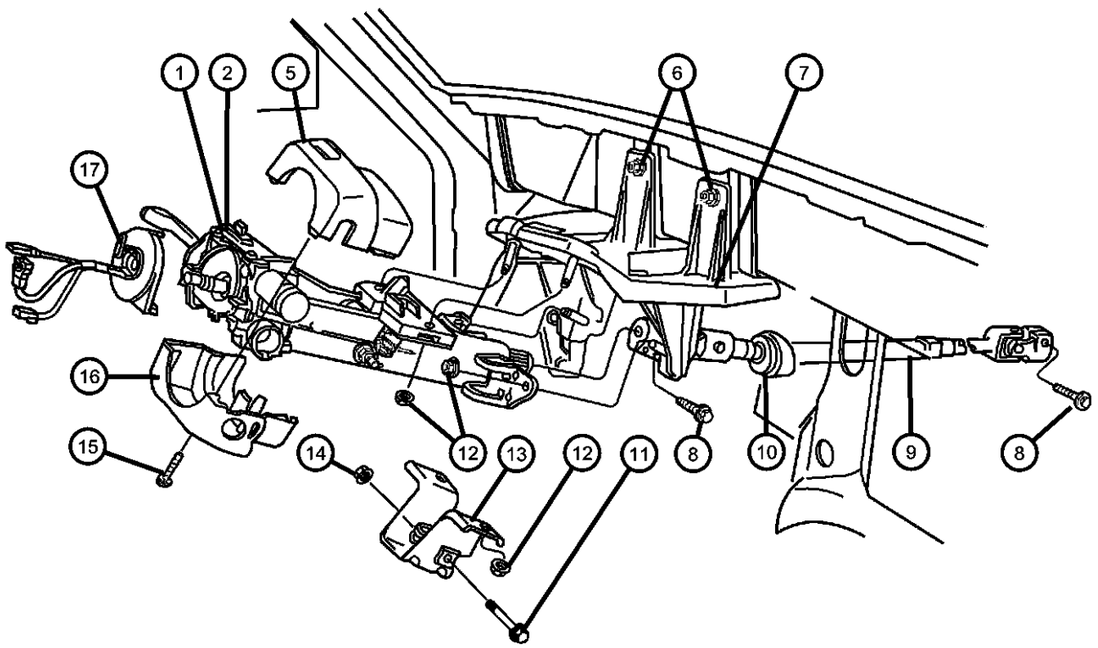

ITEM	PART NUMBER	QTY	LINE	SERIES	BODY	ENGINE	TRANS	TRIM	DESCRIPTION
14	06503182	1							NUT AND WASHER, Hex Lock Nut-Coned Teeth Washer, M8 x 1.25
15	06035434	3							SCREW AND WASHER, Pan Head, Upper to Lower Shroud, Mounting
16									SHROUD, Steering Column
	5FV70LAZ	1					DG0		without [SUA], Lower
		1					DG0		with [SUA], Lower
	5FV76LAZ	1					DBB		with [SUA], Lower
		1					DBB		without [SUA], Lower
17									CLOCKSPRING
	56009070	1							without [NHM]
	56009071	1							with [NHM]
-18									BRACKET, Instrument Panel Wiring
	56009146	1	J, T						
	56009147	1	B, U						

CHEROKEE (XJ)

SERIES	LINE	BODY	ENGINE	TRANSMISSION
L = LOWLINE	T = JEEP - 2WD B = JEEP - 2WD (RHD) J = JEEP - 4WD U = JEEP - 4WD (RHD)	72 = SPORT UTILITY 2-DR 74 = SPORT UTILITY 4-DR	ENC = 2.5L 4 Cyl Turbo Diesel Engine EPB = 2.5L 4 Cylinder Engine EPE = Engine - 2.5L Power Tech I-4 Cyl. ERH = 4.0L Power Tech I-6 Engine	DDQ = 5-Speed Manual Transmission DGS = 4-Speed Automatic AW4 Transmission DGO = ALL AUTOMATIC TRANSMISSIONS DBB = ALL MANUAL TRANSMISSIONS

Gear, Steering
Figure 19-320

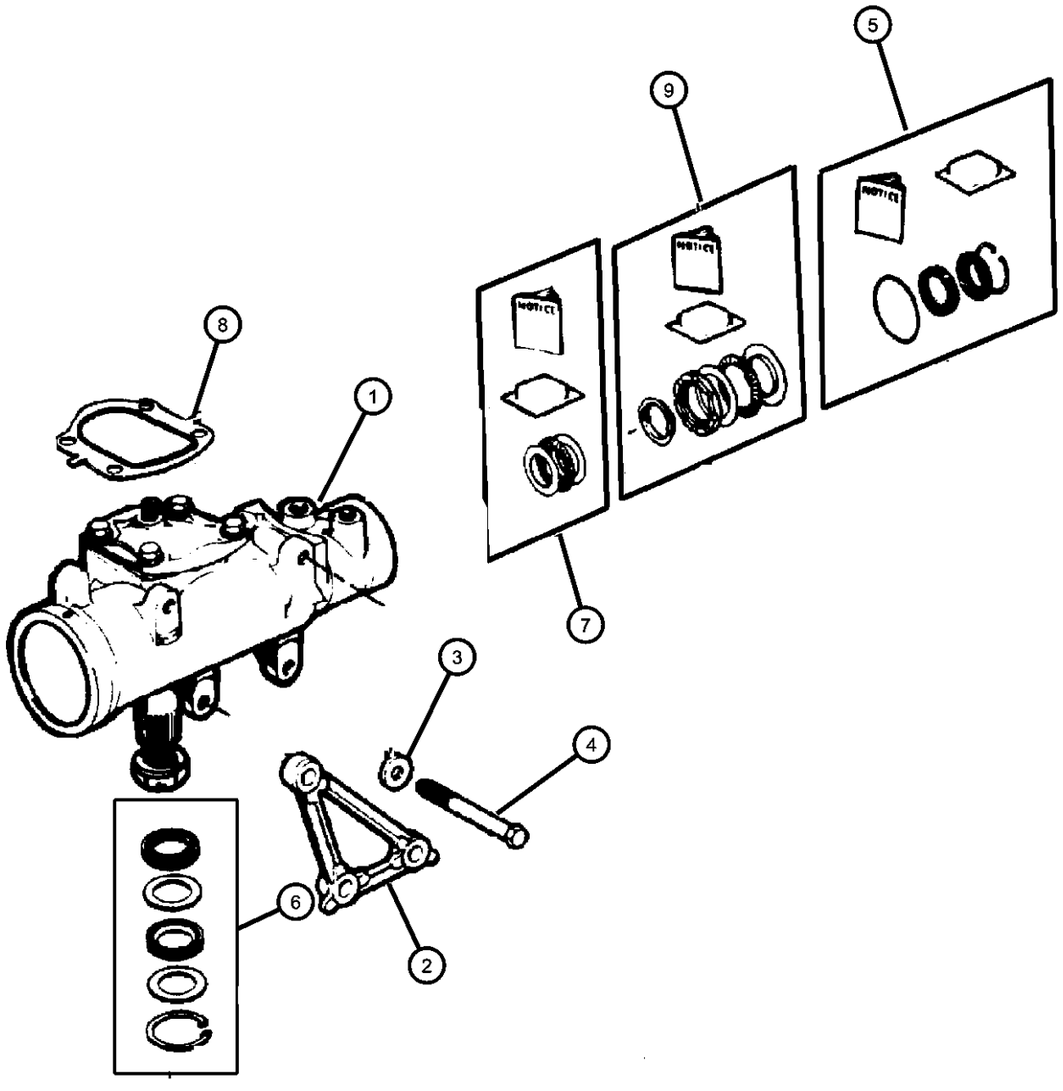

ITEM	PART NUMBER	QTY	LINE	SERIES	BODY	ENGINE	TRANS	TRIM	DESCRIPTION
1									GEAR, Power Steering
	52088386	1	J						Left Hand Drive
	52088532	1	B, U						Right Hand Drive
2									ADAPTER, Steering Gear
	52000090	1	J, T						Left Hand Drive
	52006512	1	B, U						Right Hand Drive
3	J4003926	3							WASHER, Flat, .437x.875x.135
4	06035939AA	3							SCREW, Hex Head
5	03893557	1	J, T						SEAL KIT, Steering gear end plug
6	04470365	1	J, T						SEAL KIT, Steering gear pitman shaft
7									REPAIR KIT, Thrust Bearing, Steering Gear
	04897000AA	1	J, T						
		1	B, U						
8	03893558	1	J, T						SEAL, Steering Gear Cover
9									SEAL KIT, Steering gear adjuster plug
	04886349AA	1	J, T						
		1	B, U						

CHEROKEE (XJ)

SERIES	LINE	BODY	ENGINE	TRANSMISSION
L = LOWLINE	T = JEEP - 2WD B = JEEP - 2WD (RHD) J = JEEP - 4WD U = JEEP - 4WD (RHD)	72 = SPORT UTILITY 2-DR 74 = SPORT UTILITY 4-DR	ENC = 2.5L 4 Cyl Turbo Diesel Engine EPB = 2.5L 4 Cylinder Engine EPE = Engine - 2.5L Power Tech I-4 Cyl. ERH = 4.0L Power Tech I-6 Engine	DDQ = 5-Speed Manual Transmission DGS = 4-Speed Automatic AW4 Transmission DGO = ALL AUTOMATIC TRANSMISSIONS DBB = ALL MANUAL TRANSMISSIONS

Linkage and Damper
Figure 19-410

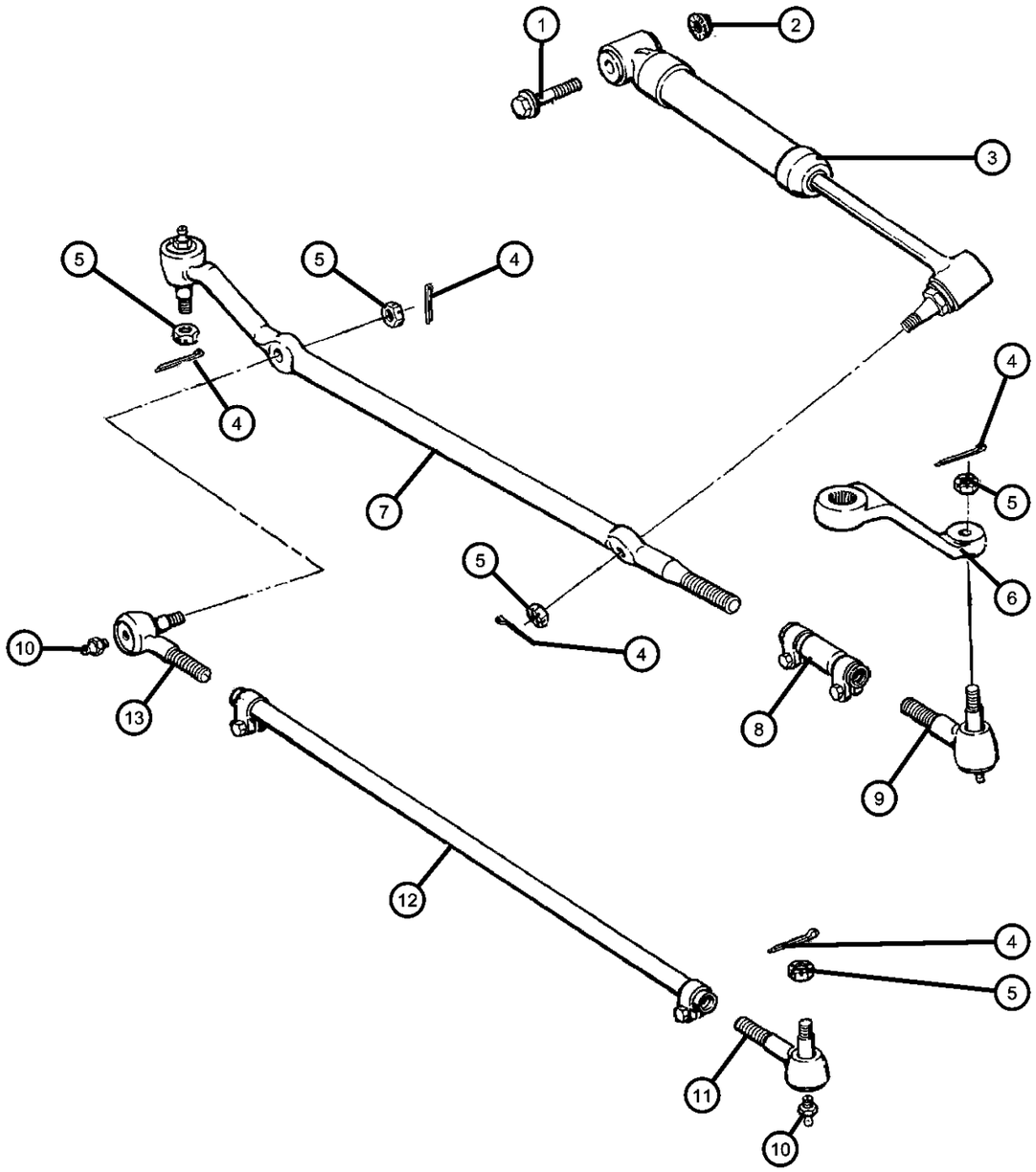

ITEM	PART NUMBER	QTY	LINE	SERIES	BODY	ENGINE	TRANS	TRIM	DESCRIPTION
1	11505098	1							BOLT, Hex Flange Head, M12x1.75x60
2	06502697	1							NUT, Hex Flange Lock, M12x1.75
3									DAMPER, Steering Linkage
	52037506	1	B, U						
	52087827	1	J, T						
4	34202101	1							PIN, Cotter
5	J0274428	1							NUT, Hex Slotted
6									ARM, Pitman
	52000615	1	J, T						
	52006505	1	B, U						
7									SOCKET, Drag Link
	52006582	1	B, U						Outer
	52006592	1	J, T						Outer
8									TUBE, Tie Rod
	52005742	1	B, U						
		1	J, T						
9									SOCKET
	52005739	1	J, T						Drag Link, Inner
		1	B, U						Drag Link, Inner
10									FITTING PACKAGE, Grease
	83507064	1	J, T						
		1	B, U						
11									SOCKET, Tie Rod, Outer
	52005741	1	J, T						
		1	B, U						
12									TUBE, Tie Rod
	52087674	1	J, T						
		1	B, U						
13									SOCKET, Tie Rod, Inner
	52005740	1	J, T						
		1	B, U						

CHEROKEE (XJ)

SERIES	LINE	BODY	ENGINE	TRANSMISSION
L = LOWLINE	T = JEEP - 2WD B = JEEP - 2WD (RHD) J = JEEP - 4WD U = JEEP - 4WD (RHD)	72 = SPORT UTILITY 2-DR 74 = SPORT UTILITY 4-DR	ENC = 2.5L 4 Cyl Turbo Diesel Engine EPB = 2.5L 4 Cylinder Engine EPE = Engine - 2.5L Power Tech I-4 Cyl. ERH = 4.0L Power Tech I-6 Engine	DDQ = 5-Speed Manual Transmission DGS = 4-Speed Automatic AW4 Transmission DGO = ALL AUTOMATIC TRANSMISSIONS DBB = ALL MANUAL TRANSMISSIONS

Pump and Mounting, with 2.5L Gas Engine
Figure 19-530

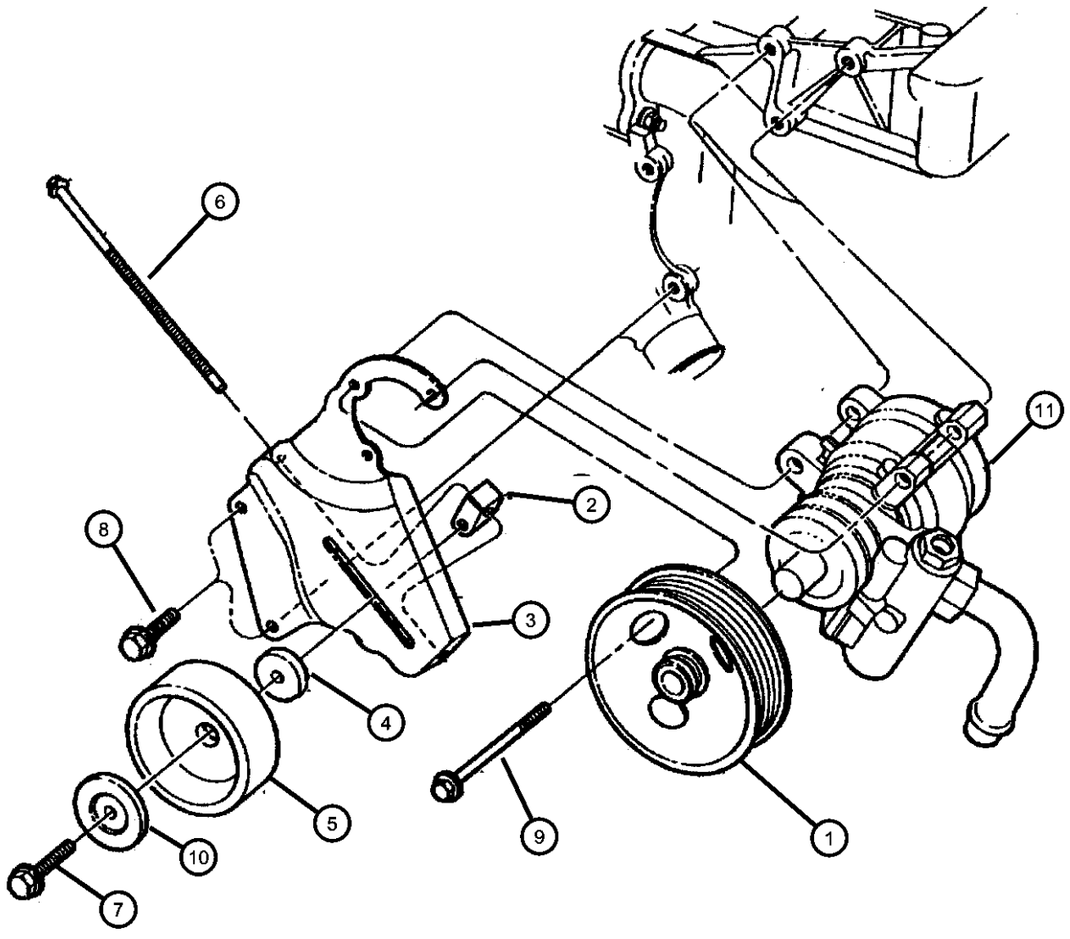

ITEM	PART NUMBER	QTY	LINE	SERIES	BODY	ENGINE	TRANS	TRIM	DESCRIPTION
NOTES; SALES CODE EPO= ALL 2.5L 14 GAS. ERO=ALL 4.0L 6CYL GAS									
1	53010258	1				EP0, ER0			PULLEY, Power Steering Pump
2									COLLAR, Tensioner Adjustment
	53010149	1	J, T			EP0			
		1	B, U			EP0			
3									BRACKET, Tensioner
	53010148	1	J, T			EP0			
		1	B, U			EP0			
4									SPACER, Belt Tensioner
	06503230	1	J, T			EP0			
		1	B, U			EP0			
5									PULLEY, Idler
	04792112	1	J, T			EP0			
		1	B, U			EP0			
6									BOLT
	06503198	1	J, T			EP0			
		1	B, U			EP0			
7									BOLT, Hex Flange Head, M10x1.50x50
	34202029	1	J, T			EP0			
		1	B, U			EP0			
8	00181112	1							SCREW AND WASHER, .375-16x1.00
9									SCREW AND WASHER, Hex Head, M8x1.25x95
	06502425	3	B, U			ER0			
		3	J, T			EP0			
10	33002201	1				EP0			BUSHING, Idler Pulley
11	52088018	1				EP0			PUMP, Power Steering

CHEROKEE (XJ)

SERIES	LINE	BODY	ENGINE	TRANSMISSION
L = LOWLINE	T = JEEP - 2WD B = JEEP - 2WD (RHD) J = JEEP - 4WD U = JEEP - 4WD (RHD)	72 = SPORT UTILITY 2-DR 74 = SPORT UTILITY 4-DR	ENC = 2.5L 4 Cyl Turbo Diesel Engine EPB = 2.5L 4 Cylinder Engine EPE = Engine - 2.5L Power Tech I-4 Cyl. ERH = 4.0L Power Tech I-6 Engine	DDQ = 5-Speed Manual Transmission DGS = 4-Speed Automatic AW4 Transmission DGO = ALL AUTOMATIC TRANSMISSIONS DBB = ALL MANUAL TRANSMISSIONS

AR = use ase required - = Non illustrrated part

Pump and Mounting, with 4.0L Engine
Figure 19-535

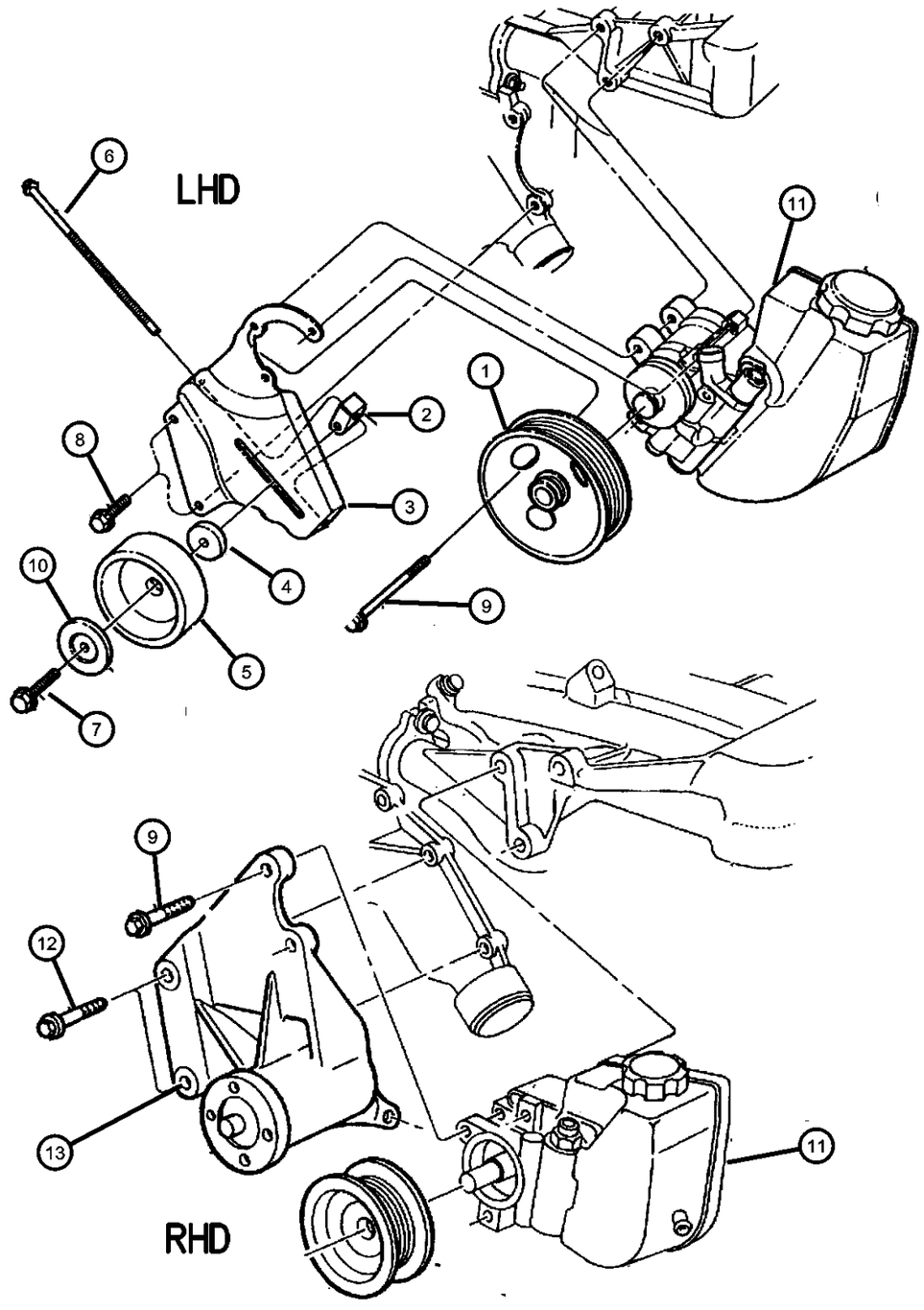

ITEM	PART NUMBER	QTY	LINE	SERIES	BODY	ENGINE	TRANS	TRIM	DESCRIPTION
NOTES; SALES CODE EPO= ALL 2.5L I4 GAS, ERO=ALL 4.0L 6CYL GAS									
NOTES; SALES CODE ERO= ALL 4.0L 6CYL GAS									
1	53010258	1				EP0, ER0			PULLEY, Power Steering Pump
2									COLLAR, Tensioner Adjustment
	53010149	1	J, T			EP0			
		1	B, U			EP0			
3									BRACKET, Tensioner
	53010148	1	J, T			EP0			
		1	B, U			EP0			
4									SPACER, Belt Tensioner
	06503230	1	J, T			EP0			
		1	B, U			EP0			
5									PULLEY, Idler
	04792112	1	J, T			EP0			
		1	B, U			EP0			
6	06503198	1	B, U			EP0			BOLT
7									BOLT, Hex Flange Head, M10x1.50x50
	34202029	1	J, T			EP0			
		1	B, U			EP0			
8	00181112	1							SCREW AND WASHER, .375-16x1.00
9									SCREW AND WASHER, Hex Head, M8x1.25x95
	06502425	3	B, U			ER0			
		3	J, T			EP0			
10									BUSHING, Idler Pulley
	33002201	1	J, T			EP0			
		1	J, T			ER0			
11									PUMP, Power Steering
	52087871AB	1	J, T			ER0			Cap, 04897287AA
	52088327	1	B, U			ER0			Cap, 04897287AA
12	J4007073	2							SCREW AND WASHER, .375-16x1.125
13	53010243	1	B, U			ER0			BRACKET, Power Steering Pump

CHEROKEE (XJ)

SERIES	LINE	BODY	ENGINE	TRANSMISSION
L = LOWLINE	T = JEEP - 2WD B = JEEP - 2WD (RHD) J = JEEP - 4WD U = JEEP - 4WD (RHD)	72 = SPORT UTILITY 2-DR 74 = SPORT UTILITY 4-DR	ENC = 2.5L 4 Cyl Turbo Diesel Engine EPB = 2.5L 4 Cylinder Engine EPE = Engine - 2.5L Power Tech I-4 Cyl. ERH = 4.0L Power Tech I-6 Engine	DDQ = 5-Speed Manual Transmission DGS = 4-Speed Automatic AW4 Transmission DGO = ALL AUTOMATIC TRANSMISSIONS DBB = ALL MANUAL TRANSMISSIONS

Pump and Mounting, with 2.5L Diesel Engine
Figure 19-545

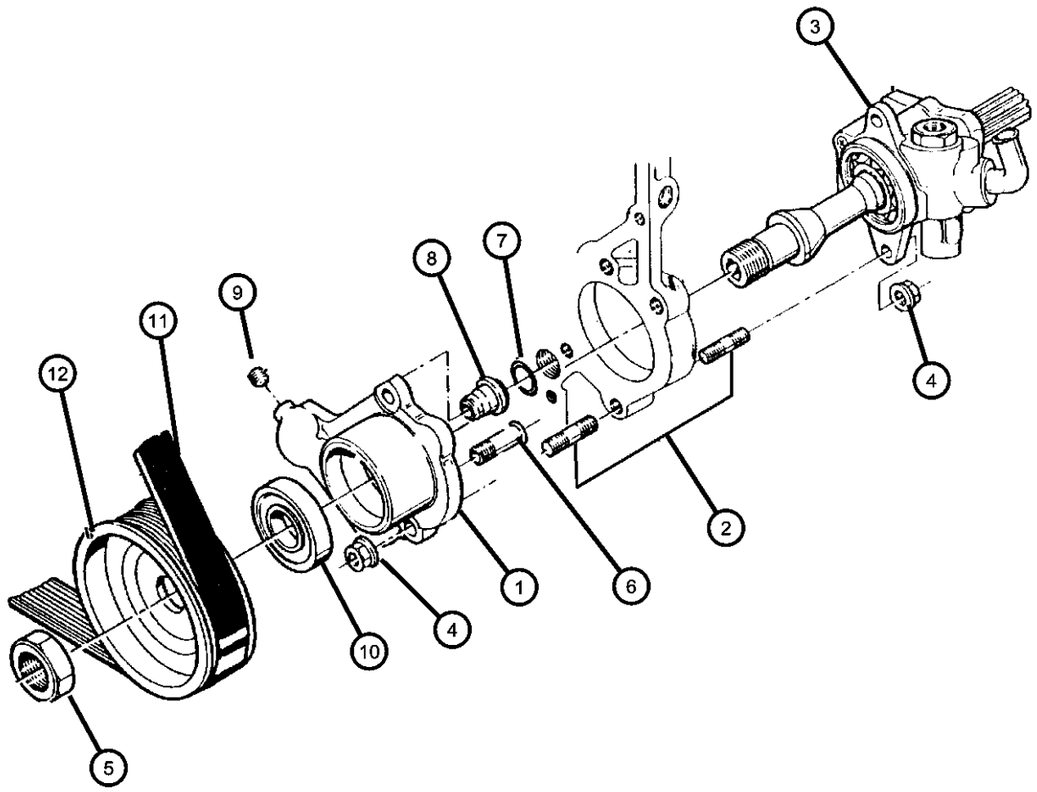

ITEM	PART NUMBER	QTY	LINE	SERIES	BODY	ENGINE	TRANS	TRIM	DESCRIPTION
NOTES; SALES CODE ENO = ALL 4 CYL DIESELS									
1	04883461AA	1				EN0			SUPPORT, Power Steering Pump
2	04723331	5				EN0			STUD, M8x25
3	04883460AA	1				EN0			PUMP, Power Steering
4	04883460AA	1							NUT, Hex Lock, M8, (NOT SERVICED)
5	04723344	1				EN0			NUT, Power Steering Pump Pulley
6	04886315AA	1				EN0			PIPE, Vacuum Pump
7	04723334	2				EN0			GASKET, Valve
8	04723335	1				EN0			VALVE, Vacuum Pump
9	04883425AA	2				EN0			PLUG
10	04723339	1				EN0			BEARING, Power Steering Pump Shaft
11	04796033	1				EN0			BELT, Accessory Drive
12	04796034	1				EN0			PULLEY, Power Steering Pump

CHEROKEE (XJ)

SERIES	LINE	BODY	ENGINE	TRANSMISSION
L = LOWLINE	T = JEEP - 2WD B = JEEP - 2WD (RHD) J = JEEP - 4WD U = JEEP - 4WD (RHD)	72 = SPORT UTILITY 2-DR 74 = SPORT UTILITY 4-DR	ENC = 2.5L 4 Cyl Turbo Diesel Engine EPB = 2.5L 4 Cylinder Engine EPE = Engine - 2.5L Power Tech I-4 Cyl. ERH = 4.0L Power Tech I-6 Engine	DDQ = 5-Speed Manual Transmission DGS = 4-Speed Automatic AW4 Transmission DGO = ALL AUTOMATIC TRANSMISSIONS DBB = ALL MANUAL TRANSMISSIONS

Hose and Reservoir, with 2.5L Gas Engine, Left Hand Drive
Figure 19-720

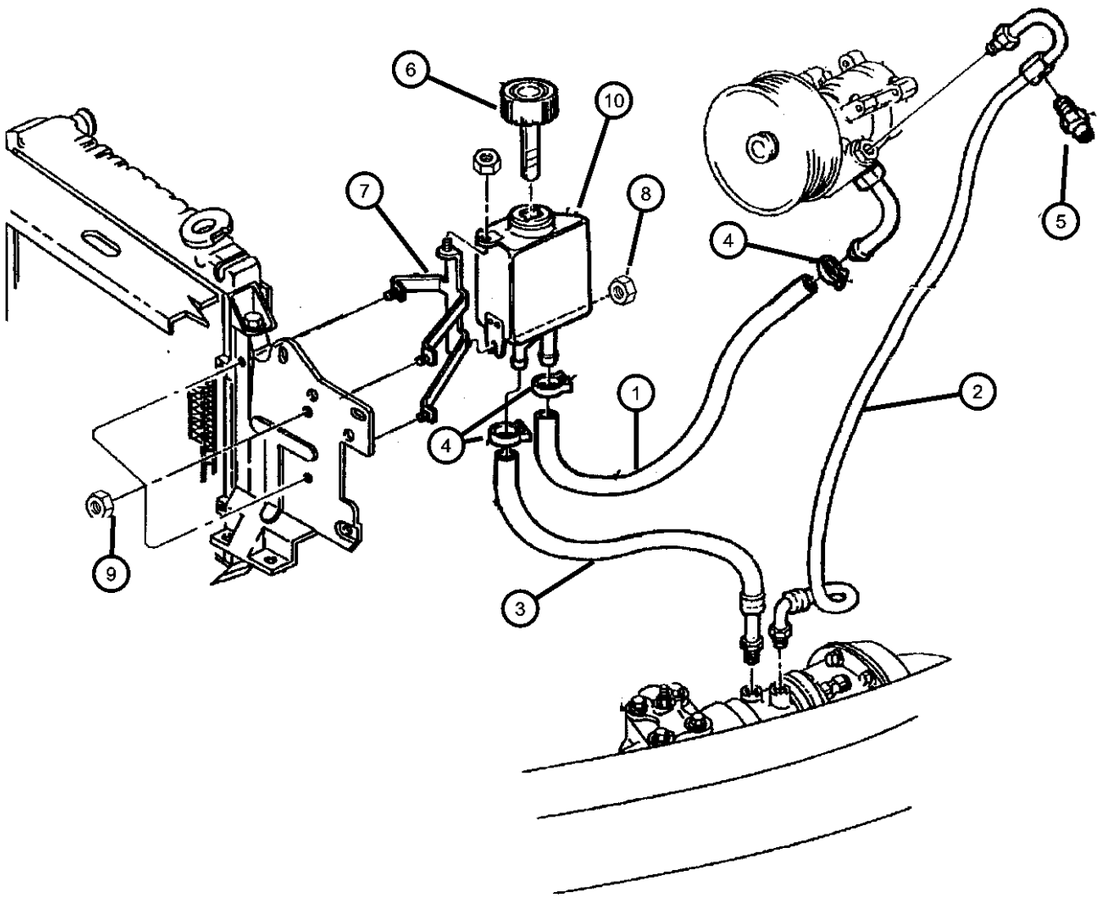

ITEM	PART NUMBER	QTY	LINE	SERIES	BODY	ENGINE	TRANS	TRIM	DESCRIPTION
Note: EPO = ALL 2.5L 4 Cylinder Gas— EPE =Magnum 2.5L SMPI Inline 4 Cylinder Gas— ENO = ALL 4 CYL DIESELS—ENC=2.5L 4 Cylinder Tu									
1	52088137	1	J, T			EP0			HOSE, Pump Supply
2	52088387AB	1	J			EPE			HOSE, Power Steering Pressure
3	52003135	1	J			EP0			HOSE, Power Steering Return
4	02448770	2				EP0			CLAMP, Hose
5	56027906AB	1	J			EPE			SWITCH, Power Steering
6	04694766	1				ENC, EP0			CAP, Power Steering Pump
7	52003224	1	J			EP0			BRACKET, Power Steering Reservoir
8	11503745	2				EN0			NUT, Hex, M6x1
9	11502722	2				ER0			NUT, Hex Flange, M5x.8
10	52006395	1				EP0			RESERVOIR, Power Steering Pump

CHEROKEE (XJ)

SERIES	LINE	BODY	ENGINE	TRANSMISSION
L = LOWLINE	T = JEEP - 2WD B = JEEP - 2WD (RHD) J = JEEP - 4WD U = JEEP - 4WD (RHD)	72 = SPORT UTILITY 2-DR 74 = SPORT UTILITY 4-DR	ENC = 2.5L 4 Cyl Turbo Diesel Engine EPB = 2.5L 4 Cylinder Engine EPE = Engine - 2.5L Power Tech I-4 Cyl. ERH = 4.0L Power Tech I-6 Engine	DDQ = 5-Speed Manual Transmission DGS = 4-Speed Automatic AW4 Transmission DGO = ALL AUTOMATIC TRANSMISSIONS DBB = ALL MANUAL TRANSMISSIONS

Hoses and Reservoir, with 2.5L Gas Engine, Right Hand Drive
Figure 19-730

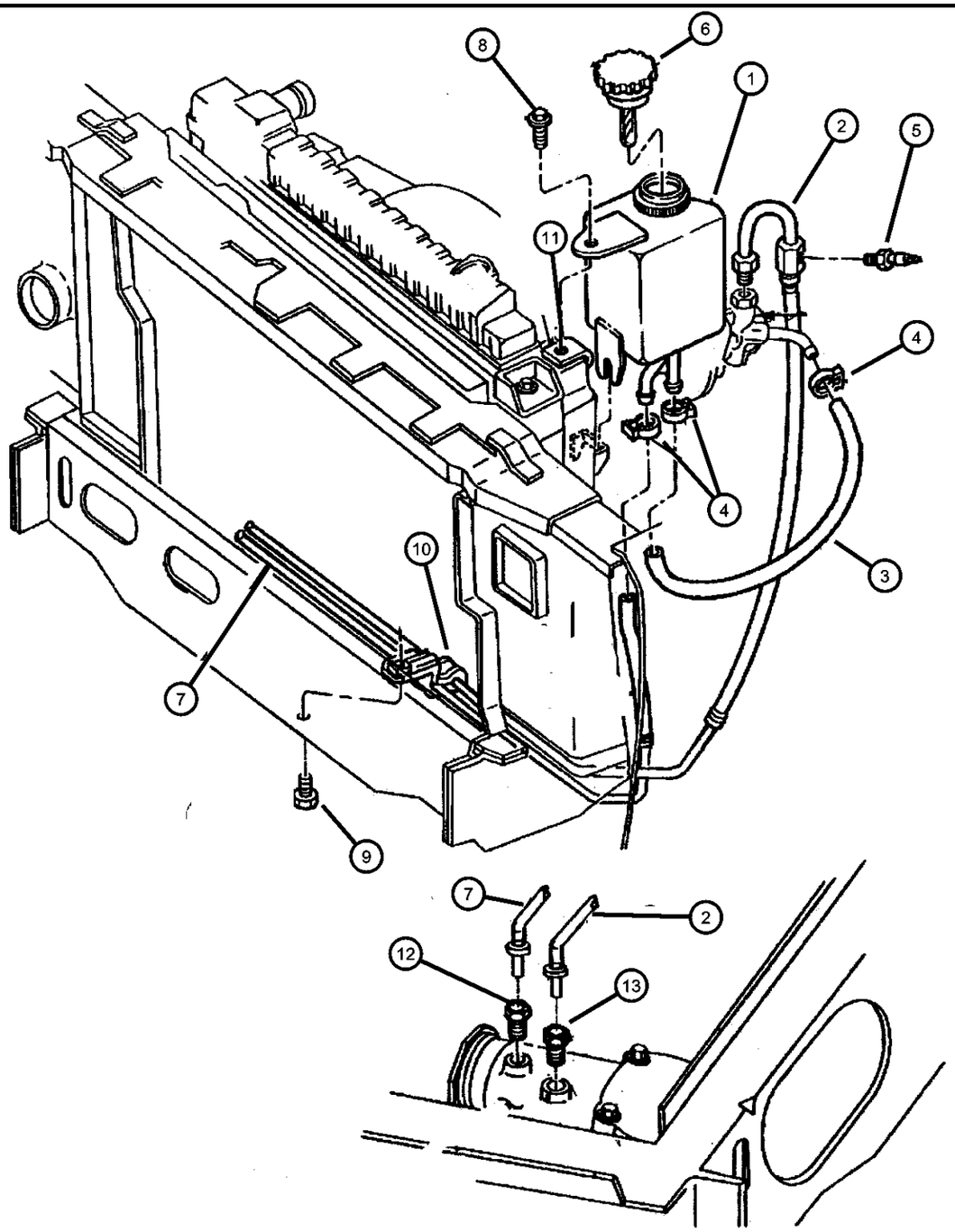

ITEM	PART NUMBER	QTY	LINE	SERIES	BODY	ENGINE	TRANS	TRIM	DESCRIPTION
NOTES; SALES CODE EPE = 2.5L I4 (MPI) GAS. EPO = ALL 2.5L I4 GAS, ENC = 2.5L CYL TURBO I/COOLED DIESEL									
1	52006395	1				EP0			RESERVOIR, Power Steering Pump
2	52088388AB	1	B			EPE			HOSE, Power Steering Pressure
3	52088159	1	B			EPE			HOSE, Pump Supply
4	02448770	2				EP0			CLAMP, Hose
5	56027906AB	1	B, U			EPE			SWITCH, Power Steering
6	04694766	1				ENC, EP0			CAP, Power Steering Pump
7	52088166	1	B, U			EP0			HOSE, Power Steering Return
8	34202575	1	B, U			EP0			SCREW AND WASHER, Hex Head
9	34202467	7							SCREW, Hex Head, M8x1.25x30
10	04333457	2	B			EP0			BRACKET, Power Steering Hose
11	06101308	1	B			EP0			NUT, U, M6x1
12	52088116	1	B			ENC, EPE			FITTING, Power Steering, Quick Connect
13	52037556	1	B			ENC, EPE			FITTING, Power Steering, Quick Connect

CHEROKEE (XJ)

SERIES	LINE	BODY	ENGINE	TRANSMISSION
L = LOWLINE	T = JEEP - 2WD B = JEEP - 2WD (RHD) J = JEEP - 4WD U = JEEP - 4WD (RHD)	72 = SPORT UTILITY 2-DR 74 = SPORT UTILITY 4-DR	ENC = 2.5L 4 Cyl Turbo Diesel Engine EPB = 2.5L 4 Cylinder Engine EPE = Engine - 2.5L Power Tech I-4 Cyl. ERH = 4.0L Power Tech I-6 Engine	DDQ = 5-Speed Manual Transmission DGS = 4-Speed Automatic AW4 Transmission DGO = ALL AUTOMATIC TRANSMISSIONS DBB = ALL MANUAL TRANSMISSIONS

Hoses and Reservoir, with 4.0L Engine
Figure 19-740

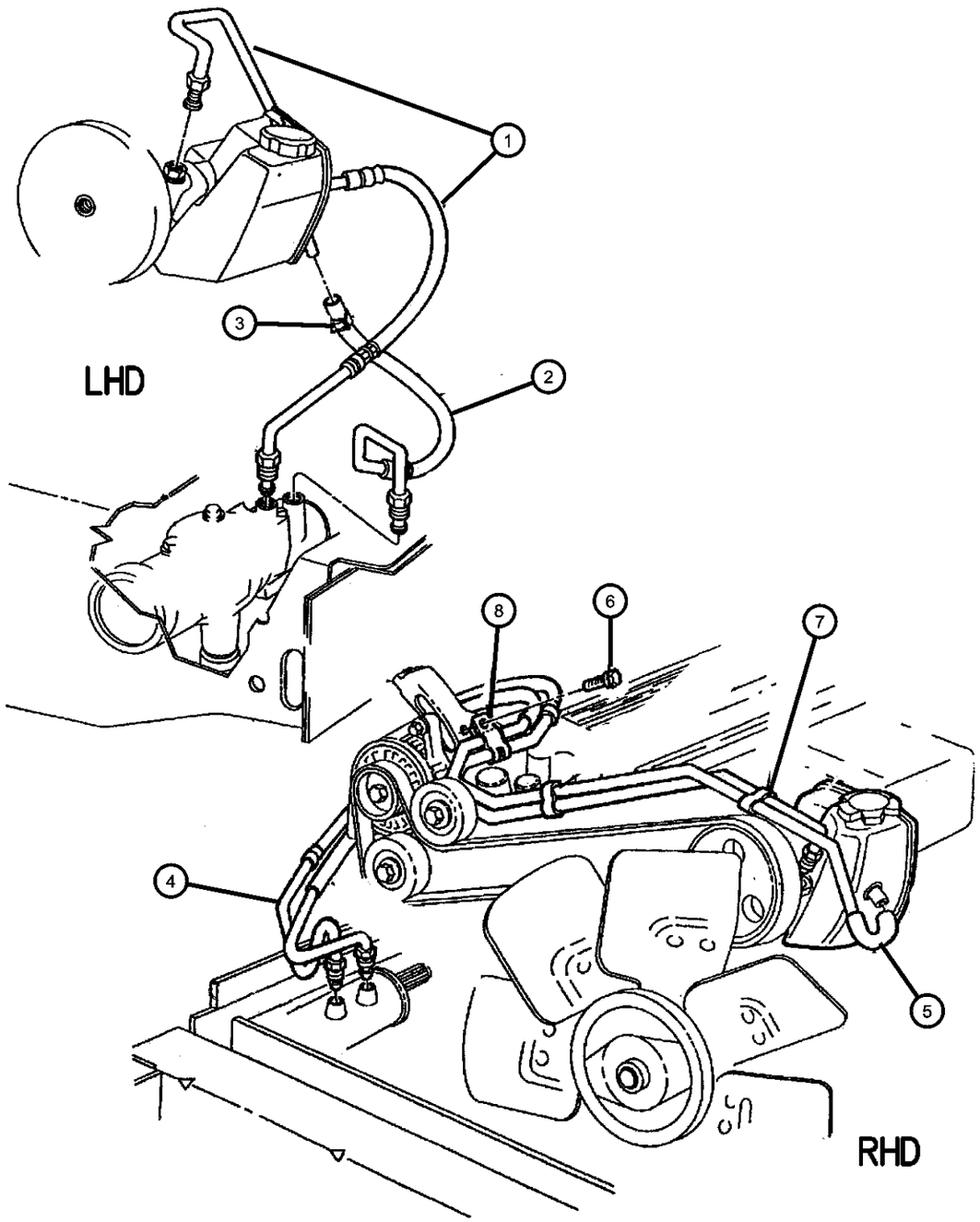

ITEM	PART NUMBER	QTY	LINE	SERIES	BODY	ENGINE	TRANS	TRIM	DESCRIPTION
NOTES; SALES CODE ERO = ALL 4.0L 6CYL GAS, ENC = 2.5L 4CYL TURBO I/COOLED DIESEL, EPO = ALL 2.5L I4 GAS									
1	52088489	1	J, T			ER0			HOSE, Power Steering Pressure
2	52037645	1	J, T			ER0			HOSE, Power Steering Return
3	02448770	1				ENC, EP0			CLAMP, Hose
4	52088021	1	B, U			ER0			HOSE, Power Steering Pressure
5	52087975	1	B, U			ER0			HOSE, Power Steering Return
6	06502946	1	B, U			ER0			SCREW, Heat Shield, M6x1.00x13.00
7	06502946	1							CLIP, Power Steering Hose, (NOT SERVICED)
8	52087977	1	B, U			ER0			CLIP, Power Steering Hose

CHEROKEE (XJ)

SERIES	LINE	BODY	ENGINE	TRANSMISSION
L = LOWLINE	T = JEEP - 2WD B = JEEP - 2WD (RHD) J = JEEP - 4WD U = JEEP - 4WD (RHD)	72 = SPORT UTILITY 2-DR 74 = SPORT UTILITY 4-DR	ENC = 2.5L 4 Cyl Turbo Diesel Engine EPB = 2.5L 4 Cylinder Engine EPE = Engine - 2.5L Power Tech I-4 Cyl. ERH = 4.0L Power Tech I-6 Engine	DDQ = 5-Speed Manual Transmission DGS = 4-Speed Automatic AW4 Transmission DGO = ALL AUTOMATIC TRANSMISSIONS DBB = ALL MANUAL TRANSMISSIONS

Hoses and Reservoir, with 2.5L Diesel Engine
Figure 19-750

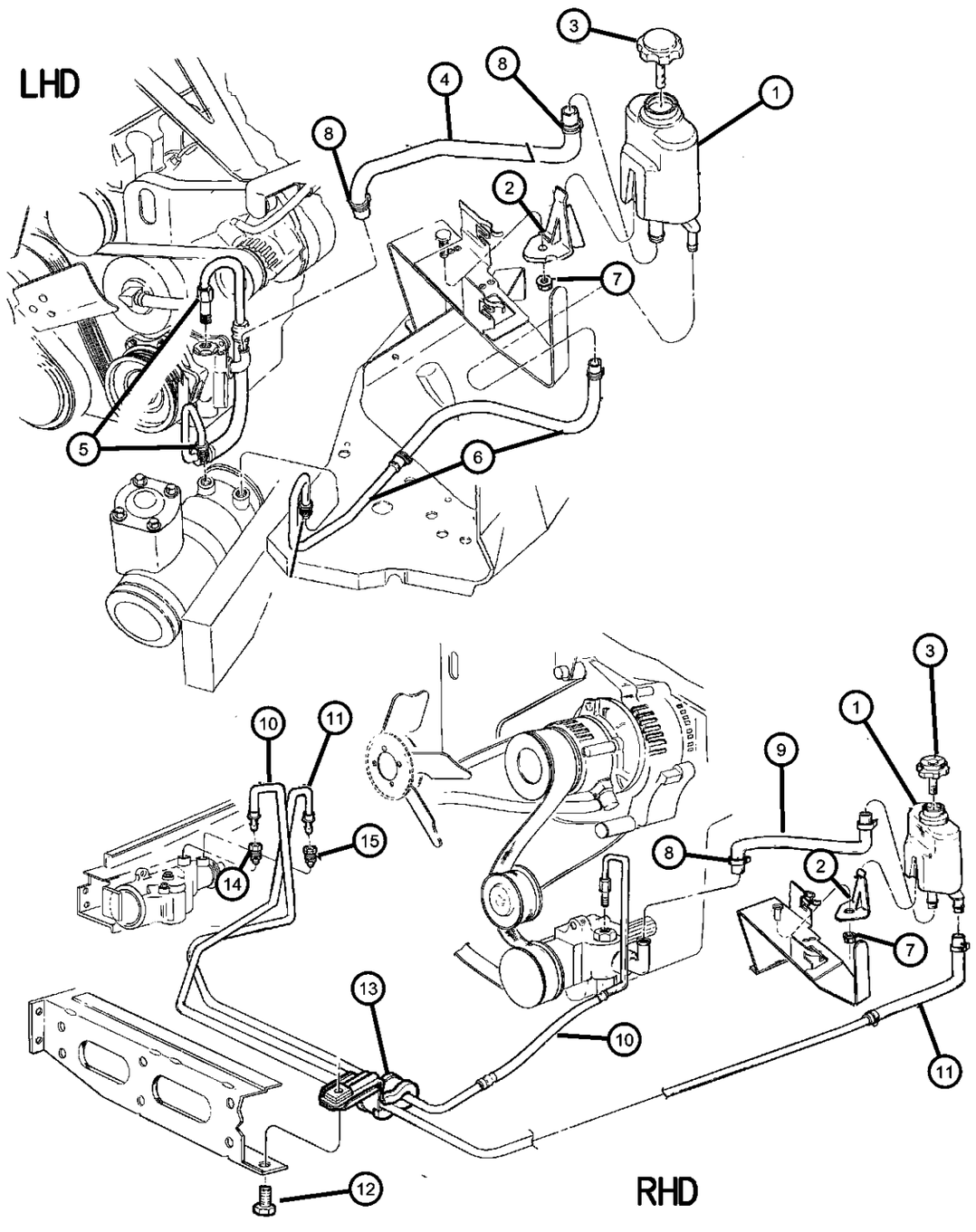

ITEM	PART NUMBER	QTY	LINE	SERIES	BODY	ENGINE	TRANS	TRIM	DESCRIPTION
NOTES; SALES CODE ENC = 2.5L 4CYL TURBO I/COOLED DIESEL, EPO = ALL 2.5L I4 GAS, EPE = 2.5L I4 (MPI) GAS									
1	52087713AB	1				ENC			RESERVOIR, Power Steering Pump
2	52087766	1				ENC			BRACKET, Power Steering Reservoir
3	04694766	1				ENC, EP0			CAP, Power Steering Pump
4	52088216	1				ENC			HOSE, Pump Supply
5	52087783	1	J, T			ENC			HOSE, Power Steering Pressure
6	52088184	1	J, T			ENC			HOSE, Power Steering Return
7	06100516	2							NUT, Hex Flange Lock, M6 Phosphate
8	02448770	2				EP0			CLAMP, Hose
9	52088216	1				ENC			HOSE, Pump Supply
10	52087886	1	B, U			ENC			HOSE, Power Steering Pressure
11	52087892	1	B, U			ENC			HOSE, Power Steering Return
12	06501648	1	B, U			ENC			SCREW, Hex Flange Head, M8x1.25x25.00
13	52088109	1	B, U			ENC			BRACKET, Power Steering Hose
14	52037556	1	B, U			ENC, EPE			FITTING, Power Steering, Quick Connect
15	52088116	1	B, U			ENC, EPE			FITTING, Power Steering, Quick Connect

CHEROKEE (XJ)

SERIES	LINE	BODY	ENGINE	TRANSMISSION
L = LOWLINE	T = JEEP - 2WD B = JEEP - 2WD (RHD) J = JEEP - 4WD U = JEEP - 4WD (RHD)	72 = SPORT UTILITY 2-DR 74 = SPORT UTILITY 4-DR	ENC = 2.5L 4 Cyl Turbo Diesel Engine EPB = 2.5L 4 Cylinder Engine EPE = Engine - 2.5L Power Tech I-4 Cyl. ERH = 4.0L Power Tech I-6 Engine	DDQ = 5-Speed Manual Transmission DGS = 4-Speed Automatic AW4 Transmission DGO = ALL AUTOMATIC TRANSMISSIONS DBB = ALL MANUAL TRANSMISSIONS

Group - AW4

Automatic Transmission 4 Speed

AW4-100 Transmission Assembly 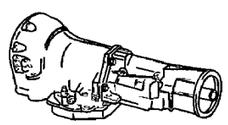	**AW4-1200** Gearshift Controls 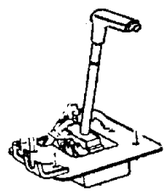	**AW4-200** Case and Extension 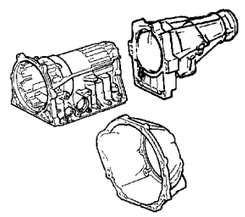	**AW4-300** Oil Pump
AW4-400 Gear Train 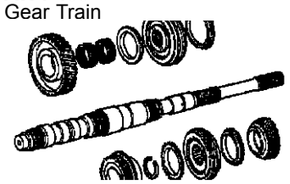	**AW4-500** Bands, Reverse and Kickdown 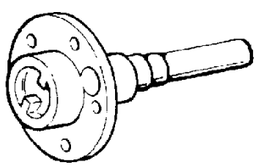	**AW4-700** Valve Body 	

Group - AW4 Automatic Transmission 4 Speed

Illustration Title — Group-Fig. No.

Transmission Assembly
Transmission AW4 (DGS) ..... Fig. AW4 - 110

Case and Extension
Case and Related Parts AW4 (DGS) ..... Fig. AW4 - 210
Linkage AW4 (DGS) ..... Fig. AW4 - 220

Oil Pump
Oil Pump AW4 (DGS) ..... Fig. AW4 - 310

Gear Train
Overdrive Clutch AW4 (DGS) ..... Fig. AW4 - 410
Clutches, Forward and Direct AW4 (DGS) ..... Fig. AW4 - 420
Clutch and Sun Gear AW4 (DGS) ..... Fig. AW4 - 430
Gear Train AW4 (DGS) ..... Fig. AW4 - 440

Bands, Reverse and Kickdown
Bands AW4 (DGS) ..... Fig. AW4 - 510

Valve Body
Valve Body AW4 (DGS) ..... Fig. AW4 - 710
Accumulator Piston AW4 (DGS) ..... Fig. AW4 - 720
Lock, Parking AW4 (DGS) ..... Fig. AW4 - 730

Gearshift Controls
Gearshift Controls AW4 (DGS) ..... Fig. AW4 - 1210

Transmission AW4 (DGS)
Figure AW4-110

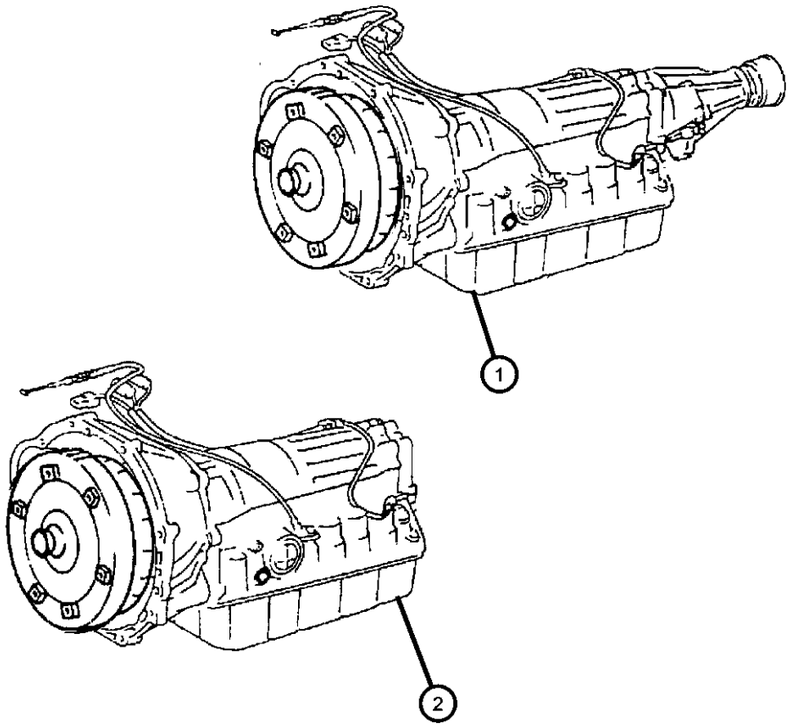

ITEM	PART NUMBER	QTY	LINE	SERIES	BODY	ENGINE	TRANS	TRIM	DESCRIPTION
Notes: ER0 = All 4.0L 6 Cylinder Gas Engines DGS = Aisin Warner 4 Speed Automatic Transmission									
1	52104180	1	B, T			ER0	DGS		TRANSMISSION, TWO WHEEL DRIVE
2	52104210	1	J, U			ER0	DGS		TRANSMISSION, FOUR WHEEL DRIVE

CHEROKEE (XJ)

SERIES	LINE	BODY	ENGINE	TRANSMISSION
L = LOWLINE	T = JEEP - 2WD B = JEEP - 2WD (RHD) J = JEEP - 4WD U = JEEP - 4WD (RHD)	72 = SPORT UTILITY 2-DR 74 = SPORT UTILITY 4-DR	ENC = 2.5L 4 Cyl Turbo Diesel Engine EPB = 2.5L 4 Cylinder Engine EPE = Engine - 2.5L Power Tech I-4 Cyl. ERH = 4.0L Power Tech I-6 Engine	DDQ = 5-Speed Manual Transmission DGS = 4-Speed Automatic AW4 Transmission DGO = ALL AUTOMATIC TRANSMISSIONS DBB = ALL MANUAL TRANSMISSIONS

Case and Related Parts AW4 (DGS)
Figure AW4-210

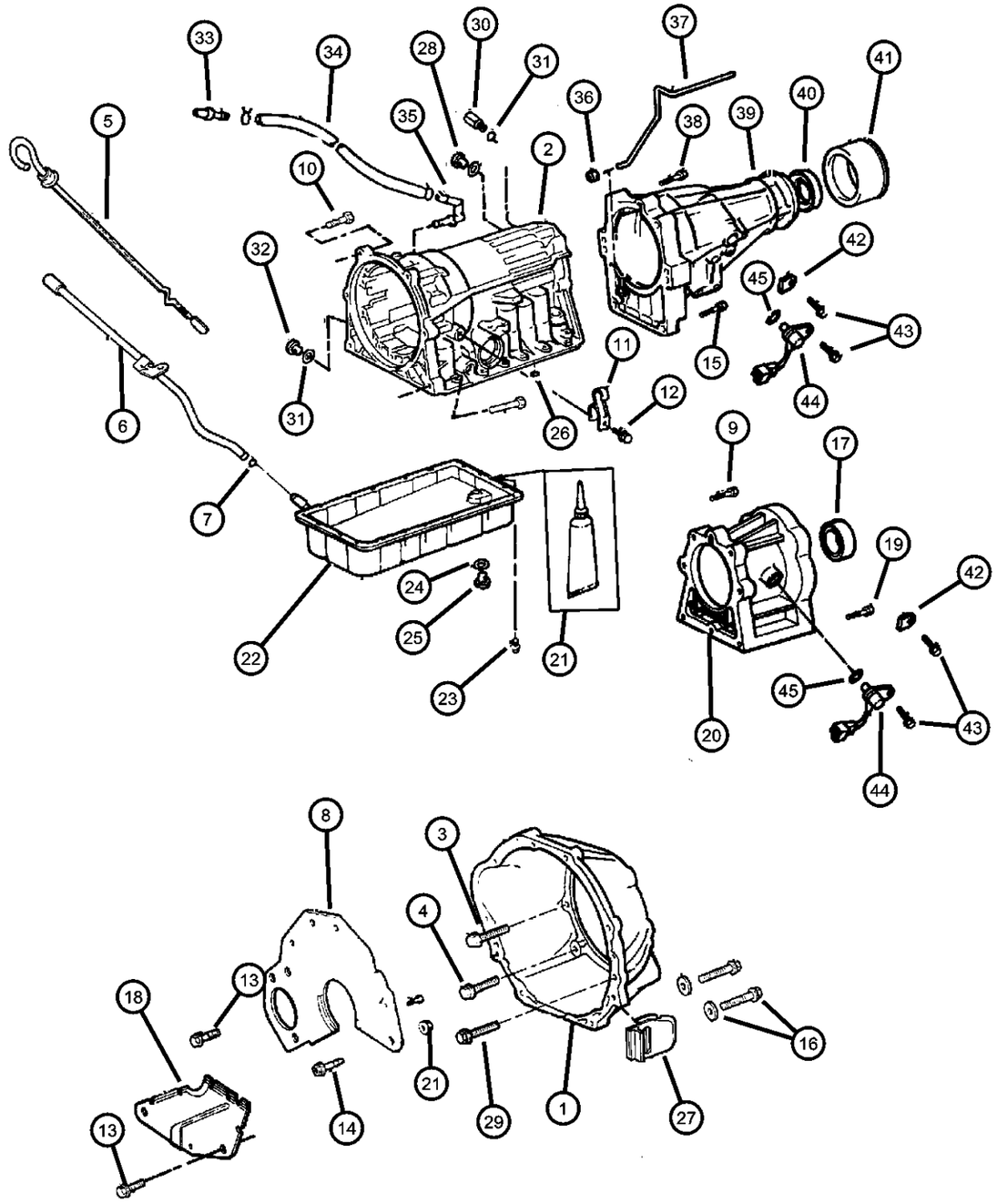

ITEM	PART NUMBER	QTY	LINE	SERIES	BODY	ENGINE	TRANS	TRIM	DESCRIPTION
Notes: ER0 = All 4.0L 6 Cylinder Gas Engines DGS = Aisin Warner 4 Speed Automatic Transmission DG0 = All Automatic Transmissions									
1									HOUSING, Torque Converter
	83504062	1	B, T			ER0	DGS		52104180
		1	J, U			ER0	DGS		52104210
2									CASE, Transmission
	83503745	1	B, T			ER0	DGS		
		1	J, U			ER0	DGS		
3									BOLT, M10x1.50x35
	83503747	1	B, T			ER0	DGS		
		1	J, U			ER0	DGS		
4									BOLT
	83503746	1	B, T			ER0	DGS		52104180
		1	J, U			ER0	DGS		52104210
5	52104146	1				EP0, ER0	DG0		INDICATOR, Transmission Fluid Level
6	53002870	1				ER0	DG0		TUBE, Filler
7	53003977	1				ER0	DG0		O RING, Indicator Tube Oil Level, Transmission
8	53004907	1				ER0	DG0		COVER, Converter
9	04637494	1	J, U			ER0	DGS		BOLT, M10x1.5x100
10	83503711	AR	B, T			ER0	DGS		BOLT AND WASHER, M8x16
11	83503715	1	B, T			ER0	DGS		CLAMP, Transmission
12									BOLT
	83503716	1	B, T			ER0	DGS		52104180
		1	J, U			ER0	DGS		52104210
13	11502850	4				ER0	DG0		BOLT, Hex Flange Head, M8x1.25x20
14	11504922	2				ER0	DG0		BOLT, Hex Head, M12x1.75x50
15	04637492	1	B, T			ER0	DGS		BOLT, Transmission Case
16	04637492	1							BOLT AND WASHER, M10x1.5, (NOT SERVICED)
17	83504055	1	J, U			ER0	DGS		SEAL, Transmission Case, 4 WD
18	52118078	1				ER0	DG0		COVER, Transmission Dust

CHEROKEE (XJ)

SERIES	LINE	BODY	ENGINE	TRANSMISSION
L = LOWLINE	T = JEEP - 2WD B = JEEP - 2WD (RHD) J = JEEP - 4WD U = JEEP - 4WD (RHD)	72 = SPORT UTILITY 2-DR 74 = SPORT UTILITY 4-DR	ENC = 2.5L 4 Cyl Turbo Diesel Engine EPB = 2.5L 4 Cylinder Engine EPE = Engine - 2.5L Power Tech I-4 Cyl. ERH = 4.0L Power Tech I-6 Engine	DDQ = 5-Speed Manual Transmission DGS = 4-Speed Automatic AW4 Transmission DGO = ALL AUTOMATIC TRANSMISSIONS DBB = ALL MANUAL TRANSMISSIONS

Case and Related Parts AW4 (DGS)
Figure AW4-210

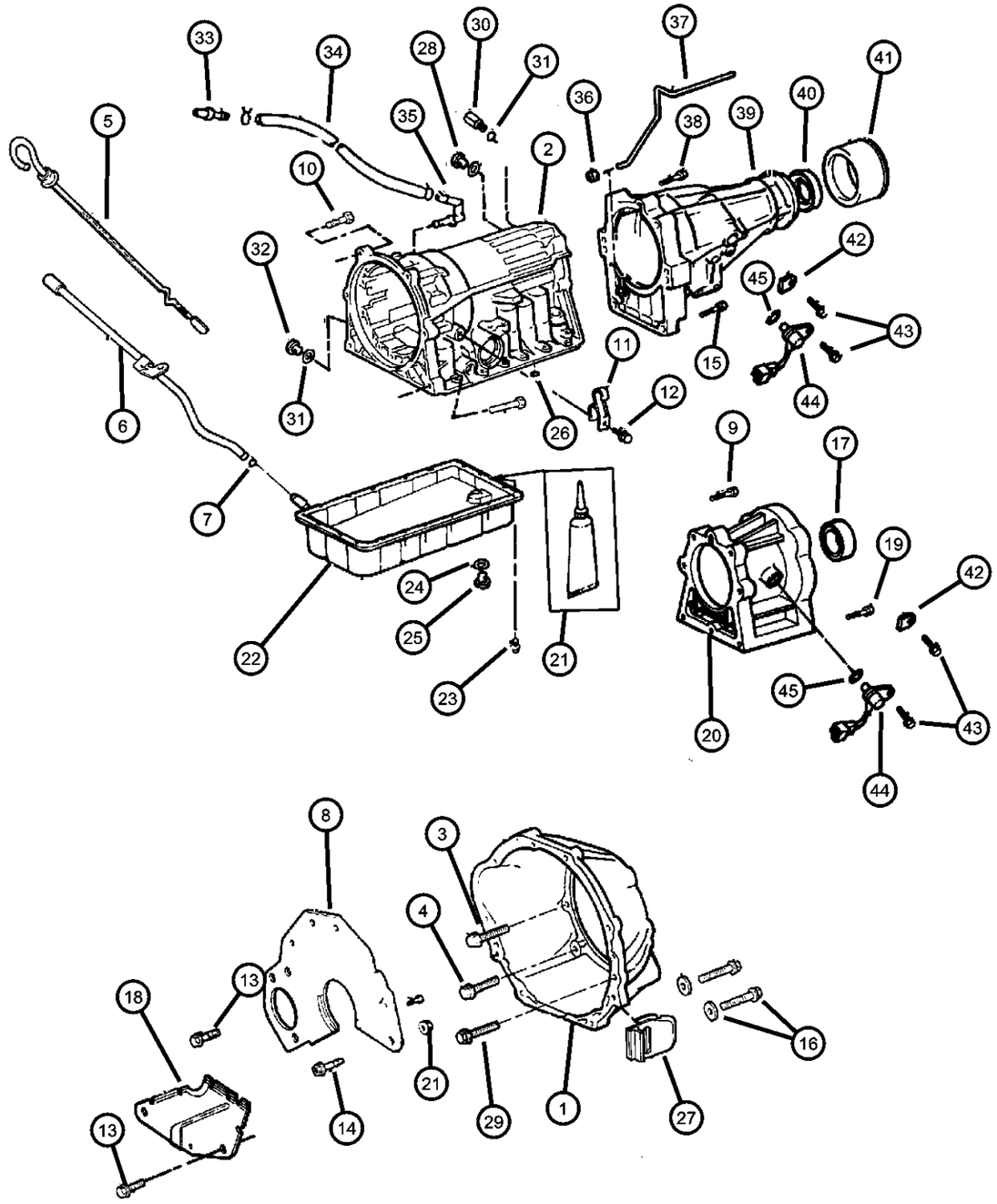

ITEM	PART NUMBER	QTY	LINE	SERIES	BODY	ENGINE	TRANS	TRIM	DESCRIPTION
19	04637495	1	J, U			ER0	DGS		BOLT AND WASHER, M10x1.5x4
20	83504056	1	J, U			ER0	DGS		ADAPTER, Transmission, 4 WD
21									GASKET, Sealant
	83504038	1	B, T			ER0	DGS		
		1	J, U			ER0	DGS		
22									PAN, Transmission Oil
	83504037	1	B, T			ER0	DGS		
		1	J, U			ER0	DGS		
23									BOLT, Oil Pan
	04637548	1	B, T			ER0	DGS		
		1	J, U			ER0	DGS		
24									GASKET, Drain Plug
	83504040	1	B, T			ER0	DGS		
		1	J, U			ER0	DGS		
25									PLUG, Transmission
	83504041	1	B, T			ER0	DGS		
		1	J, U			ER0	DGS		
26									SEAL, Transmission
	05252444	1	B, T			ER0	DGS		
		1	J, U			ER0	DGS		
27	52117660	1				ER0	DG0		GROMMET, Timing Probe
28									PLUG, Transmission Case
	83503749	1	B, T			ER0	DGS		
		1	J, U			ER0	DGS		
29									BOLT
	04637491	1	B, T			ER0	DGS		
		1	J, U			ER0	DGS		
30									UNION, Transmission Oil Cooler
	83503728	1	B, T			ER0	DGS		
		1	J, U			ER0	DGS		
31									O RING, Oil Cooler
	83503727	1	B, T			ER0	DGS		
		1	J, U			ER0	DGS		

CHEROKEE (XJ)

SERIES	LINE	BODY	ENGINE	TRANSMISSION
L = LOWLINE	T = JEEP - 2WD B = JEEP - 2WD (RHD) J = JEEP - 4WD U = JEEP - 4WD (RHD)	72 = SPORT UTILITY 2-DR 74 = SPORT UTILITY 4-DR	ENC = 2.5L 4 Cyl Turbo Diesel Engine EPB = 2.5L 4 Cylinder Engine EPE = Engine - 2.5L Power Tech I-4 Cyl. ERH = 4.0L Power Tech I-6 Engine	DDQ = 5-Speed Manual Transmission DGS = 4-Speed Automatic AW4 Transmission DGO = ALL AUTOMATIC TRANSMISSIONS DBB = ALL MANUAL TRANSMISSIONS

Case and Related Parts AW4 (DGS)
Figure AW4-210

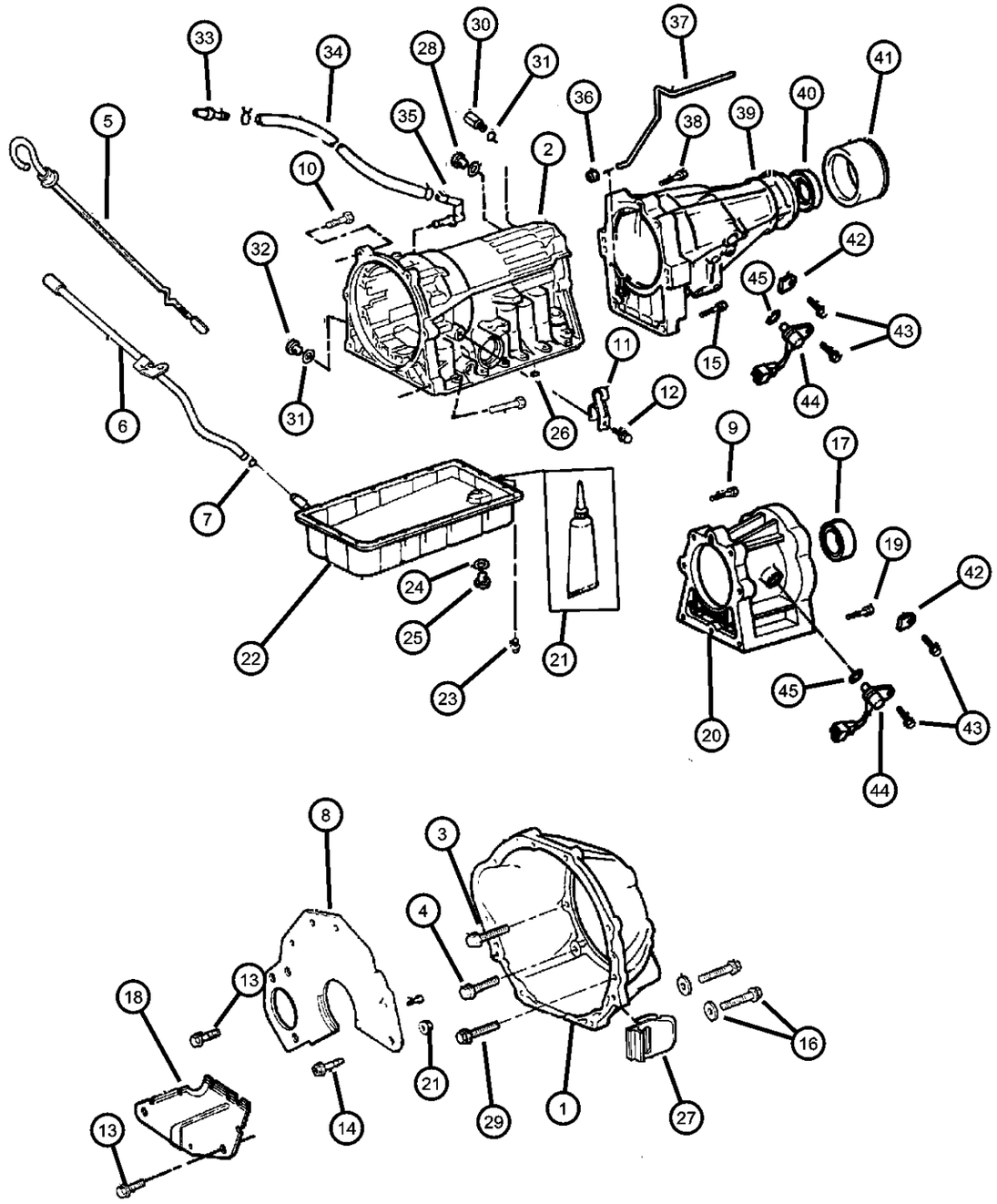

ITEM	PART NUMBER	QTY	LINE	SERIES	BODY	ENGINE	TRANS	TRIM	DESCRIPTION
32									PLUG, Transmission Case
	83503726	1	B, T			ER0	DGS		
		1	J, U			ER0	DGS		
33									BREATHER, Transmission
	83503729	1	B, T			ER0	DGS		2 WD
	83503737	1	J, U			ER0	DGS		4 WD
34	83503720	1	J, U			ER0	DGS		HOSE, Transmission Vent
35	83503738	1	J, U			ER0	DGS		ADAPTER, Transmission
36	83504052	1	B, T			ER0	DGS		SEAL, Transmission Vent, 2 WD
37	83504053	1	B, T			ER0	DGS		TUBE, Valve Body, 2 WD
38	04637493	1	B, T			ER0	DGS		BOLT AND WASHER, M10x1.5, 2 WD
39	83504046	1	B, T			ER0	DGS		CASE, Transmission Rear, 2 WD
40									SEAL, Transmission Case
	83504048	1	B, T			ER0	DGS		
	83504055	1	J, U			ER0	DGS		
41	83504050	1	B, T			ER0	DGS		DEFLECTOR, Transfer Case Dust, 2 WD
42									PLATE, Retaining
	83503721	1	B, T			ER0	DGS		
		1	J, U			ER0	DGS		
43									SCREW AND CONED WASHER, Hex Head, M6x1.00x16.00
	34201808	1	B			ER0	DGS		
		1	J			ER0	DGS		
44									SENSOR, Vehicle Speed
	83503722	1	B, T			ER0	DGS		
		1	J, U			ER0	DGS		
45									O RING, Trans Speedo Adapter
	83503723	1	B, T			ER0	DGS		
		1	J, U			ER0	DGS		

CHEROKEE (XJ)

SERIES	LINE	BODY	ENGINE	TRANSMISSION
L = LOWLINE	T = JEEP - 2WD B = JEEP - 2WD (RHD) J = JEEP - 4WD U = JEEP - 4WD (RHD)	72 = SPORT UTILITY 2-DR 74 = SPORT UTILITY 4-DR	ENC = 2.5L 4 Cyl Turbo Diesel Engine EPB = 2.5L 4 Cylinder Engine EPE = Engine - 2.5L Power Tech I-4 Cyl. ERH = 4.0L Power Tech I-6 Engine	DDQ = 5-Speed Manual Transmission DGS = 4-Speed Automatic AW4 Transmission DGO = ALL AUTOMATIC TRANSMISSIONS DBB = ALL MANUAL TRANSMISSIONS

Linkage AW4 (DGS)
Figure AW4-220

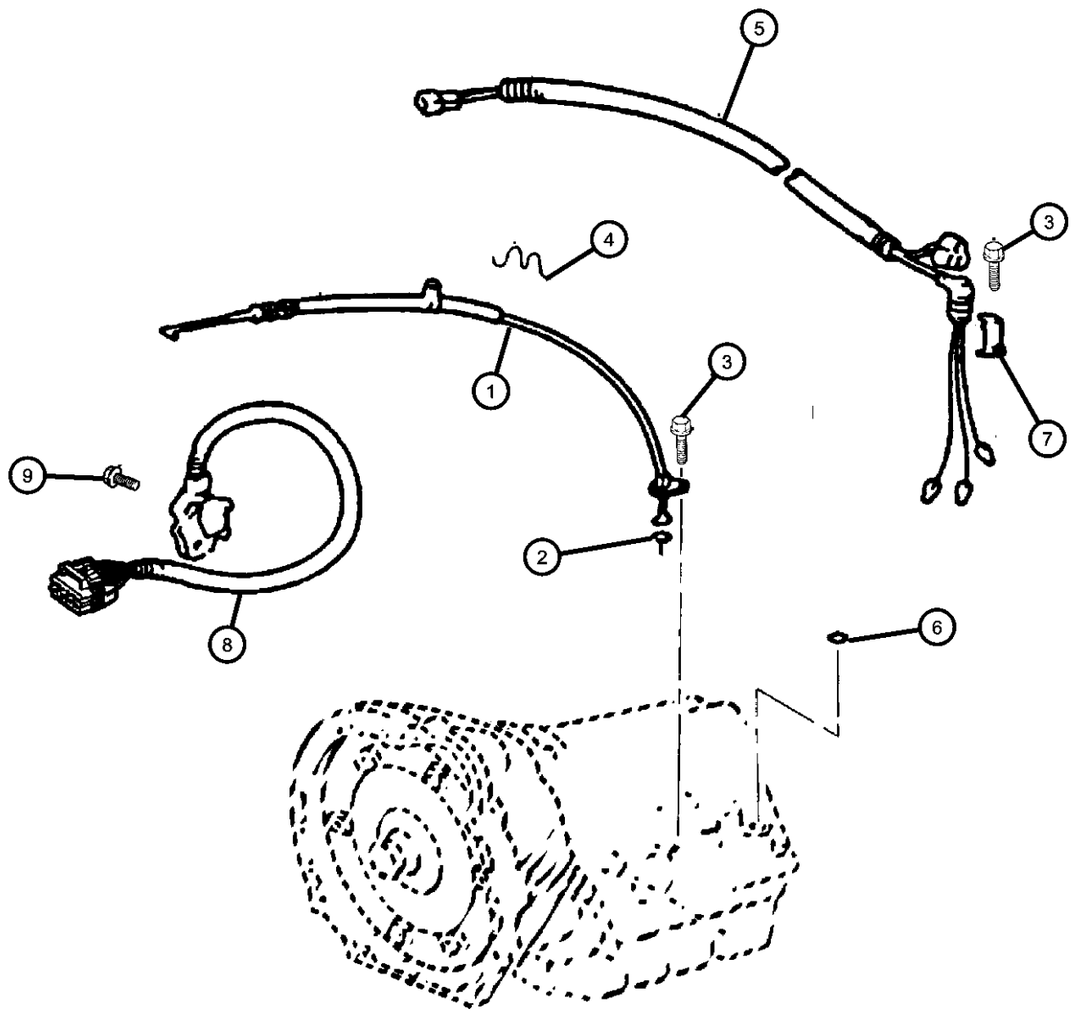

ITEM	PART NUMBER	QTY	LINE	SERIES	BODY	ENGINE	TRANS	TRIM	DESCRIPTION
Notes:									
ER0 = All 4.0L 6 Cylinder Gas Engines									
DGS = Aisin Warner 4 Speed Automatic Transmission									
1									CABLE, Throttle Control
	52077578	1	B, T			ER0	DGS		52104180
		1	J, U			ER0	DGS		52104210
2									O RING, Throttle Cable
	83503708	1	B, T			ER0	DGS		52104180
		1	J, U			ER0	DGS		52104210
3									SCREW AND CONED WASHER, Hex Head, M6x1.00x16.00
	34201808	1	B			ER0	DGS		52104180
		1	J			ER0	DGS		52104210
4									RETAINER, Throttle Cable Retention
	83503710	1	B, T			ER0	DGS		52104180
		1	J, U			ER0	DGS		52104210
5									HARNESS, Valve Body Solenoid
	04882174	1	B, T			ER0	DGS		52104180
		1	J, U			ER0	DGS		52104210
6									O RING, Solenoid Connector Seal, Transmission
	83503719	1	B, T			ER0	DGS		52104180
		1	J, U			ER0	DGS		52104210
7	83503717	1	J, U			ER0	DGS		PLATE, Retaining, 52104210
8									SWITCH, Neutral, Safety, Back Up
	04882173	1	B, T			ER0	DGS		52104180
		1	J, U			ER0	DGS		52104210
9									BOLT, M8x1.25x30
	83503714	1	B, T			ER0	DGS		52104180
		1	J, U			ER0	DGS		52104210

CHEROKEE (XJ)

SERIES	LINE	BODY	ENGINE	TRANSMISSION
L = LOWLINE	T = JEEP - 2WD B = JEEP - 2WD (RHD) J = JEEP - 4WD U = JEEP - 4WD (RHD)	72 = SPORT UTILITY 2-DR 74 = SPORT UTILITY 4-DR	ENC = 2.5L 4 Cyl Turbo Diesel Engine EPB = 2.5L 4 Cylinder Engine EPE = Engine - 2.5L Power Tech I-4 Cyl. ERH = 4.0L Power Tech I-6 Engine	DDQ = 5-Speed Manual Transmission DGS = 4-Speed Automatic AW4 Transmission DGO = ALL AUTOMATIC TRANSMISSIONS DBB = ALL MANUAL TRANSMISSIONS

Oil Pump AW4 (DGS)
Figure AW4-310

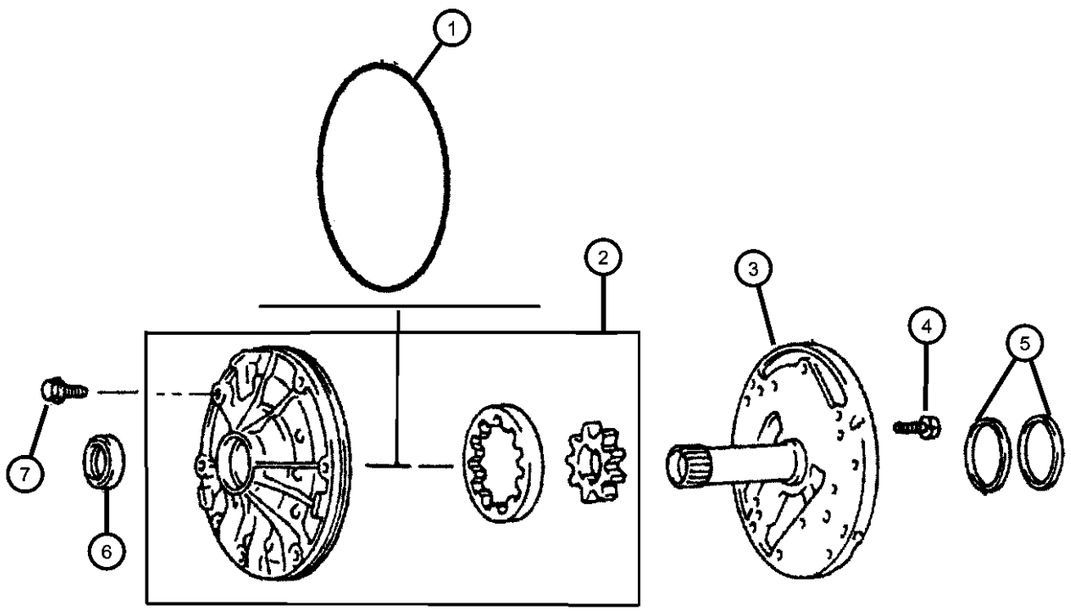

ITEM	PART NUMBER	QTY	LINE	SERIES	BODY	ENGINE	TRANS	TRIM	DESCRIPTION
Notes:									
ER0 = All 4.0l 6 Cylinder Gas Engines									
DGS = Aisin Warner 4 Speed Automatic Transmission									
1									O RING, Transmission Pump Assy
	83503758	1	B, T			ER0	DGS		52104180
		1	J, U			ER0	DGS		52104210
2									HOUSING, Pump
	83504283	1	B, T			ER0	DGS		52104180
		1	J, U			ER0	DGS		52104210
3									STATOR, Support
	04626166	1	B, T			ER0	DGS		52104180
		1	J, U			ER0	DGS		52104210
4									BOLT AND WASHER, Hex Head, M6x1.0x16
	04626167	13	B, T			ER0	DGS		
		13	J, U			ER0	DGS		
5									SEAL, Pump Reaction Shaft
	83503757	1	B, T			ER0	DGS		52104180
		1	J, U			ER0	DGS		52104210
6									SEAL, Transmission Oil Pump
	83503752	1	B, T			ER0	DGS		52104180
		1	J, U			ER0	DGS		52104210
7									BOLT
	83503759	1	B, T			ER0	DGS		52104180
		1	J, U			ER0	DGS		52104210

CHEROKEE (XJ)

SERIES	LINE	BODY	ENGINE	TRANSMISSION
L = LOWLINE	T = JEEP - 2WD B = JEEP - 2WD (RHD) J = JEEP - 4WD U = JEEP - 4WD (RHD)	72 = SPORT UTILITY 2-DR 74 = SPORT UTILITY 4-DR	ENC = 2.5L 4 Cyl Turbo Diesel Engine EPB = 2.5L 4 Cylinder Engine EPE = Engine - 2.5L Power Tech I-4 Cyl. ERH = 4.0L Power Tech I-6 Engine	DDQ = 5-Speed Manual Transmission DGS = 4-Speed Automatic AW4 Transmission DGO = ALL AUTOMATIC TRANSMISSIONS DBB = ALL MANUAL TRANSMISSIONS

Overdrive Clutch AW4 (DGS)
Figure AW4-410

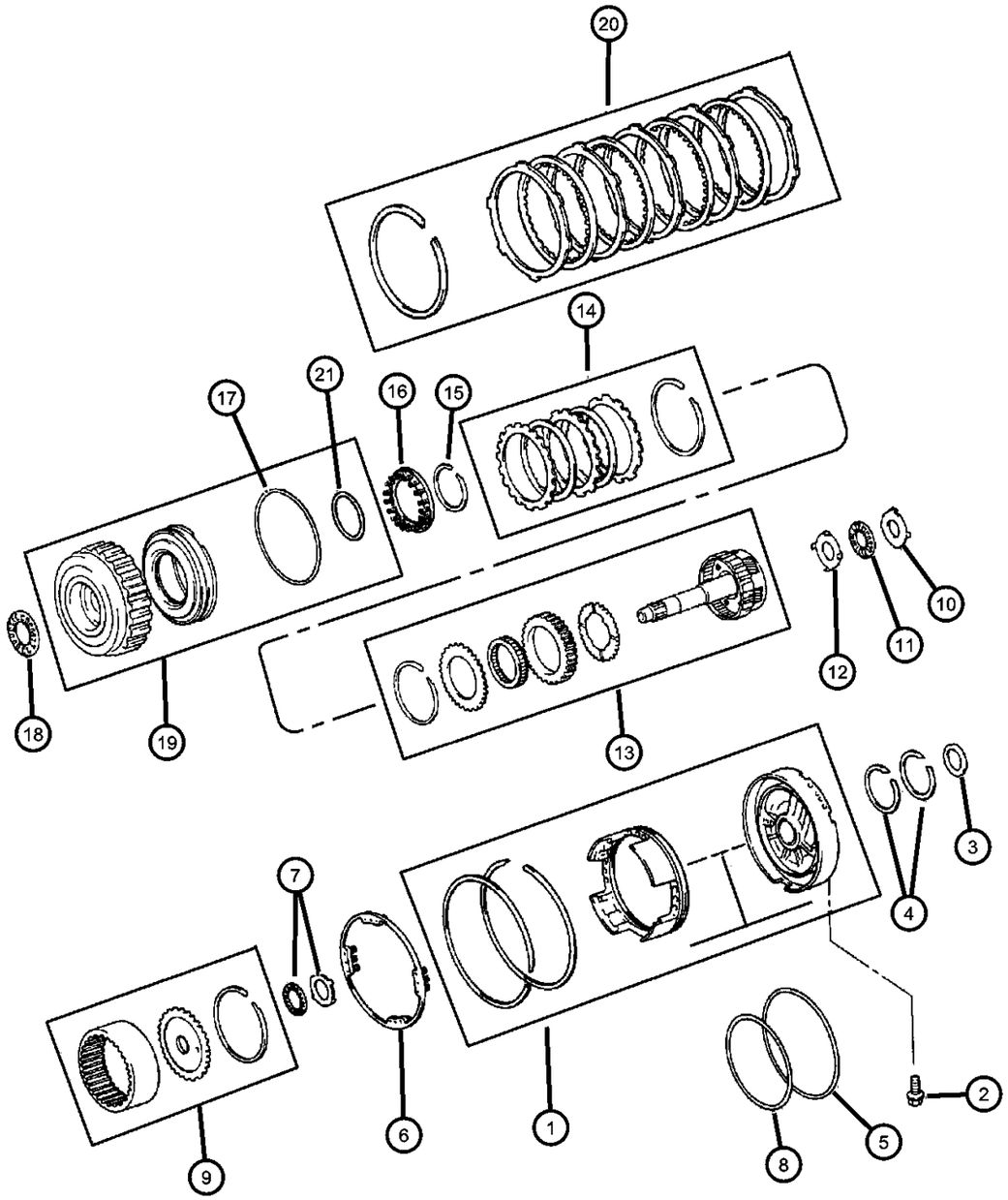

ITEM	PART NUMBER	QTY	LINE	SERIES	BODY	ENGINE	TRANS	TRIM	DESCRIPTION
Notes:									
ER0 = All 4.0L 6 Cylinder Gas Engines									
DGS = Aisin Warner 4 Speed Automatic Transmission									
1									OVERDRIVE PACKAGE, Support and Piston
	04636977	1	B, T			ER0	DGS		
		1	J, U			ER0	DGS		
2	04796568	1	B, T			ER0	DGS		BOLT, Overdrive Support
3									RACE, Thrust Bearing
	83503784	1	B, T			ER0	DGS		
		1	J, U			ER0	DGS		
4									SEAL, Pump Reaction Shaft
	83503757	1	B, T			ER0	DGS		
		1	J, U			ER0	DGS		
5									O RING, O/Drive Support Outer, Transmission
	04636782	1	B, T			ER0	DGS		
		1	J, U			ER0	DGS		
6									SPRING, Overdrive Brake Return
	04636784	1	B, T			ER0	DGS		
		1	J, U			ER0	DGS		
7									THRUST BEARING PACKAGE, Overdrive
	04637023	1	B, T			ER0	DGS		
		1	J, U			ER0	DGS		
8									O RING, O/Drive Support Inner, Transmission
	04636783	1	B, T			ER0	DGS		
		1	J, U			ER0	DGS		
9									GEAR PACKAGE, Planetary Overdrive
	04636978	1	B, T			ER0	DGS		
		1	J, U			ER0	DGS		
10									RACE, Thrust Bearing
	83503916	1	B, T			ER0	DGS		
		1	J, U			ER0	DGS		
11									THRUST BEARING

CHEROKEE (XJ)

SERIES	LINE	BODY	ENGINE	TRANSMISSION
L = LOWLINE	T = JEEP - 2WD B = JEEP - 2WD (RHD) J = JEEP - 4WD U = JEEP - 4WD (RHD)	72 = SPORT UTILITY 2-DR 74 = SPORT UTILITY 4-DR	ENC = 2.5L 4 Cyl Turbo Diesel Engine EPB = 2.5L 4 Cylinder Engine EPE = Engine - 2.5L Power Tech I-4 Cyl. ERH = 4.0L Power Tech I-6 Engine	DDQ = 5-Speed Manual Transmission DGS = 4-Speed Automatic AW4 Transmission DGO = ALL AUTOMATIC TRANSMISSIONS DBB = ALL MANUAL TRANSMISSIONS

Overdrive Clutch AW4 (DGS)
Figure AW4-410

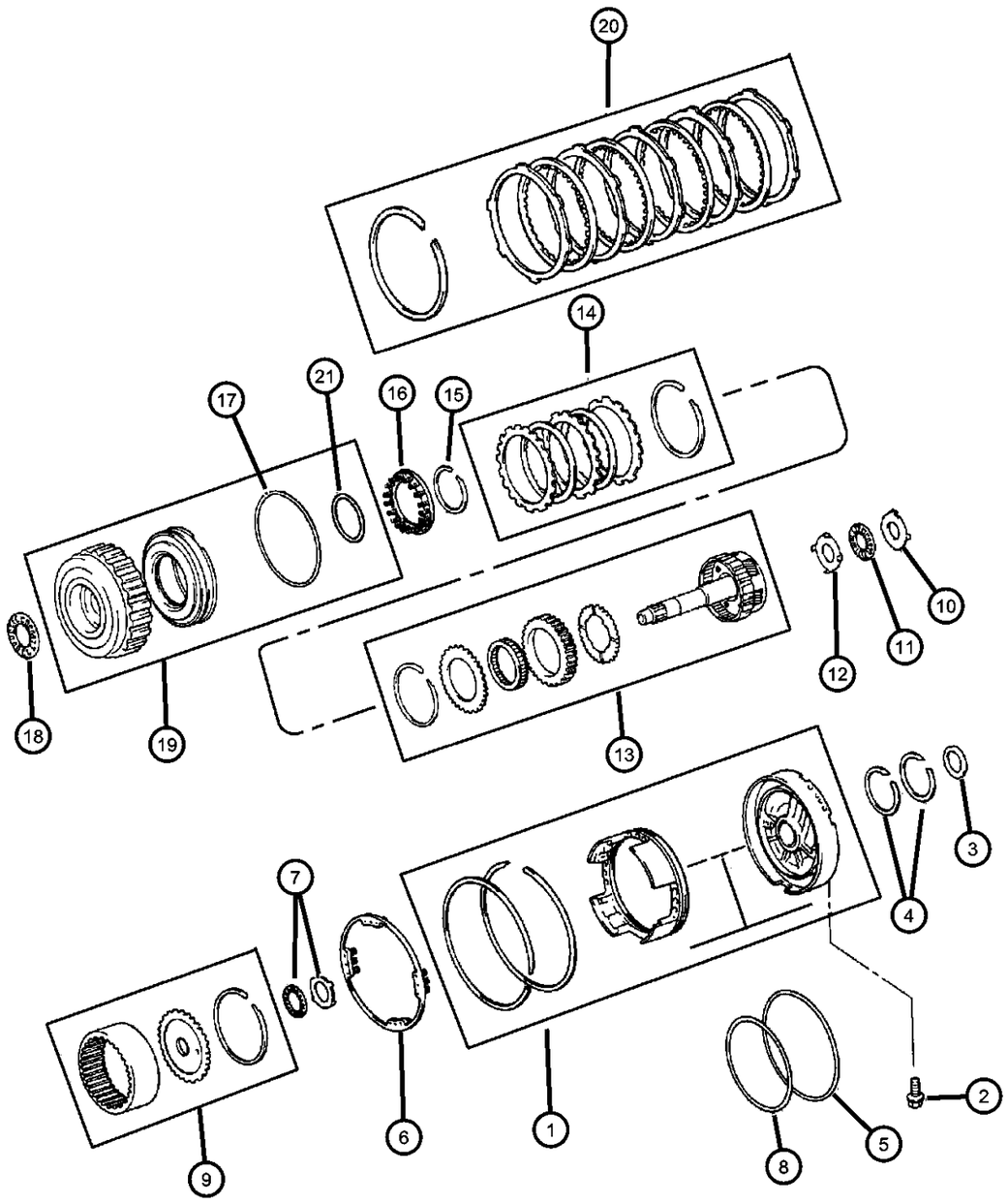

ITEM	PART NUMBER	QTY	LINE	SERIES	BODY	ENGINE	TRANS	TRIM	DESCRIPTION
	83503802	1	B, T			ER0	DGS		
		1	J, U			ER0	DGS		
12									RACE, Thrust Bearing
	83503915	1	B, T			ER0	DGS		
		1	J, U			ER0	DGS		
13									GEAR PACKAGE, Planetary Overdrive
	04637024	1	B, T			ER0	DGS		
		1	J, U			ER0	DGS		
14									CLUTCH PACKAGE, Direct Clutch
	04886127AA	1	B, T			ER0	DGS		
		1	J, U			ER0	DGS		
15									SNAP RING
	83503810	1	B, T			ER0	DGS		
		1	J, U			ER0	DGS		
16									SPRING, Piston Return
	83503928	1	B, T			ER0	DGS		
		1	J, U			ER0	DGS		
17									O RING, Transmission Clutch Piston Outer
	83503926	1	B, T			ER0	DGS		
		1	J, U			ER0	DGS		
18		1							BEARING, (NOT SERVICED)
19									DRUM PACKAGE, Transmission
	04637025	1	B, T			ER0	DGS		
		1	J, U			ER0	DGS		
20									DISC AND PLATE PACKAGE
	04886126AA	1	B, T			ER0	DGS		
		1	J, U			ER0	DGS		
21									O RING, Transmission Clutch Piston Inner
	83503811	1	B, T			ER0	DGS		
		1	J, U			ER0	DGS		

CHEROKEE (XJ)

SERIES	LINE	BODY	ENGINE	TRANSMISSION
L = LOWLINE	T = JEEP - 2WD B = JEEP - 2WD (RHD) J = JEEP - 4WD U = JEEP - 4WD (RHD)	72 = SPORT UTILITY 2-DR 74 = SPORT UTILITY 4-DR	ENC = 2.5L 4 Cyl Turbo Diesel Engine EPB = 2.5L 4 Cylinder Engine EPE = Engine - 2.5L Power Tech I-4 Cyl. ERH = 4.0L Power Tech I-6 Engine	DDQ = 5-Speed Manual Transmission DGS = 4-Speed Automatic AW4 Transmission DGO = ALL AUTOMATIC TRANSMISSIONS DBB = ALL MANUAL TRANSMISSIONS

Clutches, Forward and Direct AW4 (DGS)
Figure AW4-420

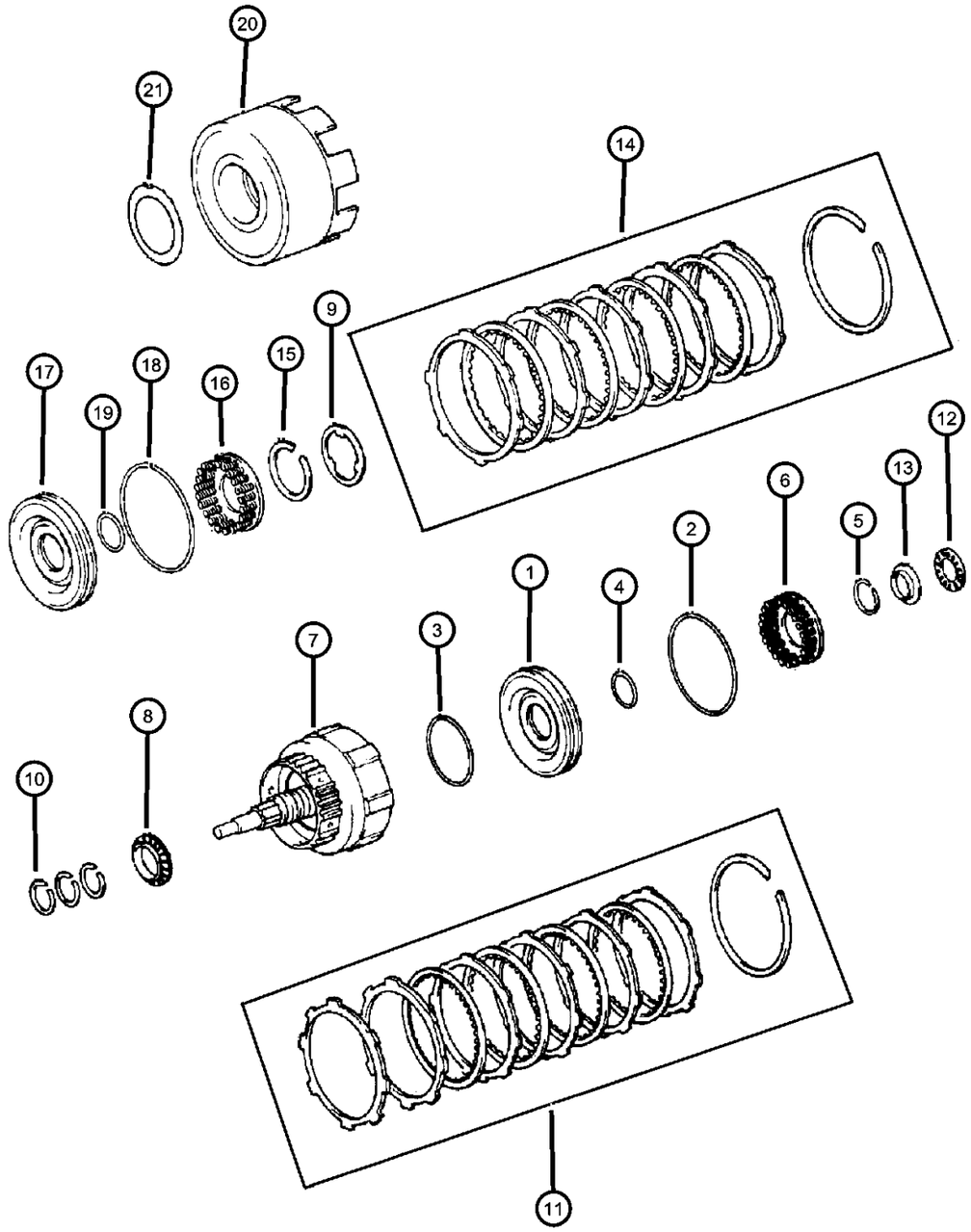

ITEM	PART NUMBER	QTY	LINE	SERIES	BODY	ENGINE	TRANS	TRIM	DESCRIPTION
Notes:									
ER0 = All 4.0L 6 Cylinder Gas Engines									
DGS = Aisin Warner 4 Speed Automatic Transmission									
1									PISTON, Clutch
	04636683	1	B, T			ER0	DGS		
		1	J, U			ER0	DGS		
2									O RING, Transmission Clutch
	04637006	1	B, T			ER0	DGS		
		1	J, U			ER0	DGS		
3									O RING, Transmission Clutch
	04626170	1	B, T			ER0	DGS		
		1	J, U			ER0	DGS		
4									O RING, Transmission Clutch
	04626176	1	B, T			ER0	DGS		
		1	J, U			ER0	DGS		
5									SNAP RING
	83503792	1	B, T			ER0	DGS		
		1	J, U			ER0	DGS		
6									SPRING, Clutch
	83503793	1	B, T			ER0	DGS		
		1	J, U			ER0	DGS		
7									INPUT SHAFT, Transmission
	04626169	1	B, T			ER0	DGS		
		1	J, U			ER0	DGS		
8									BEARING, Forward Clutch
	83503785	1	B, T			ER0	DGS		
		1	J, U			ER0	DGS		
9									THRUST WASHER, Direct Clutch
	83503825	1	B, T			ER0	DGS		
		1	J, U			ER0	DGS		
10									SEAL, Input Shaft
	83503799	1	B, T			ER0	DGS		
		1	J, U			ER0	DGS		
11									CLUTCH, Front

CHEROKEE (XJ)

SERIES	LINE	BODY	ENGINE	TRANSMISSION
L = LOWLINE	T = JEEP - 2WD B = JEEP - 2WD (RHD) J = JEEP - 4WD U = JEEP - 4WD (RHD)	72 = SPORT UTILITY 2-DR 74 = SPORT UTILITY 4-DR	ENC = 2.5L 4 Cyl Turbo Diesel Engine EPB = 2.5L 4 Cylinder Engine EPE = Engine - 2.5L Power Tech I-4 Cyl. ERH = 4.0L Power Tech I-6 Engine	DDQ = 5-Speed Manual Transmission DGS = 4-Speed Automatic AW4 Transmission DGO = ALL AUTOMATIC TRANSMISSIONS DBB = ALL MANUAL TRANSMISSIONS

Clutches, Forward and Direct AW4 (DGS)
Figure AW4-420

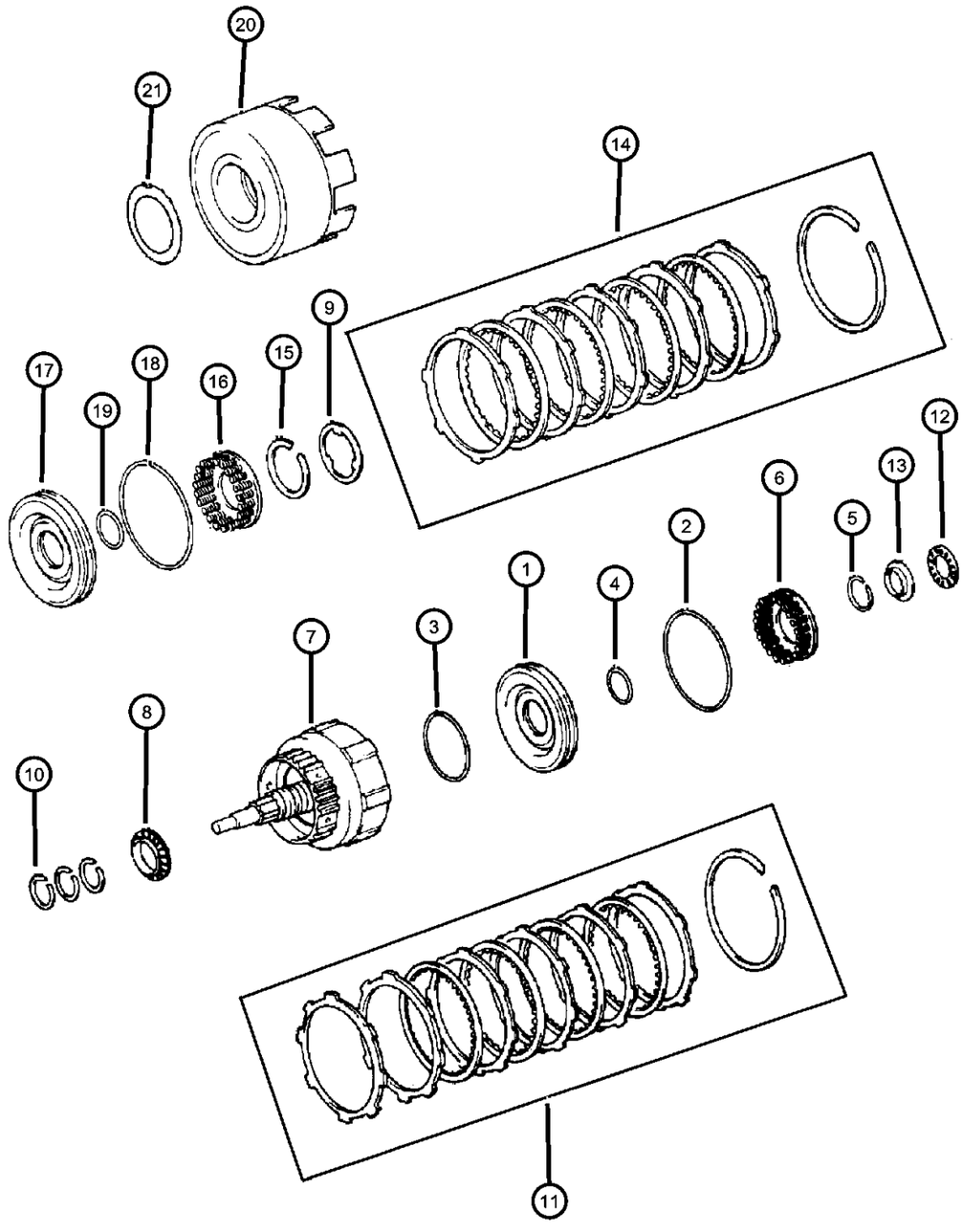

ITEM	PART NUMBER	QTY	LINE	SERIES	BODY	ENGINE	TRANS	TRIM	DESCRIPTION
	04637022	1	B, T			ER0	DGS		
		1	J, U			ER0	DGS		
12									THRUST BEARING
	83503802	1	B, T			ER0	DGS		
		1	J, U			ER0	DGS		
13									RACE, Thrust Bearing
	83503800	1	B, T			ER0	DGS		
		1	J, U			ER0	DGS		
14									CLUTCH PACKAGE, Direct Clutch
	04886043AA	1	B, T			ER0	DGS		
		1	J, U			ER0	DGS		
15									SNAP RING
	83503810	1	B, T			ER0	DGS		
		1	J, U			ER0	DGS		
16									SPRING, Clutch
	83503813	1	B, T			ER0	DGS		
		1	J, U			ER0	DGS		
17									PISTON, Clutch
	83503812	1	B, T			ER0	DGS		
		1	J, U			ER0	DGS		
18									O RING, Transmission Clutch
	04637006	1	B, T			ER0	DGS		
		1	J, U			ER0	DGS		
19									O RING, Transmission Clutch Piston Inner
	83503811	1	B, T			ER0	DGS		
		1	J, U			ER0	DGS		
20									DRUM, Automatic Transmission
	04883917AA	1	B, T			ER0	DGS		
		1	J, U			ER0	DGS		
21		1							THRUST WASHER, Direct Clutch, (NOT SERVICED)

CHEROKEE (XJ)

SERIES	LINE	BODY	ENGINE	TRANSMISSION
L = LOWLINE	T = JEEP - 2WD B = JEEP - 2WD (RHD) J = JEEP - 4WD U = JEEP - 4WD (RHD)	72 = SPORT UTILITY 2-DR 74 = SPORT UTILITY 4-DR	ENC = 2.5L 4 Cyl Turbo Diesel Engine EPB = 2.5L 4 Cylinder Engine EPE = Engine - 2.5L Power Tech I-4 Cyl. ERH = 4.0L Power Tech I-6 Engine	DDQ = 5-Speed Manual Transmission DGS = 4-Speed Automatic AW4 Transmission DGO = ALL AUTOMATIC TRANSMISSIONS DBB = ALL MANUAL TRANSMISSIONS

AR = use ase required - = Non illustrrated part

Clutch and Sun Gear AW4 (DGS)
Figure AW4-430

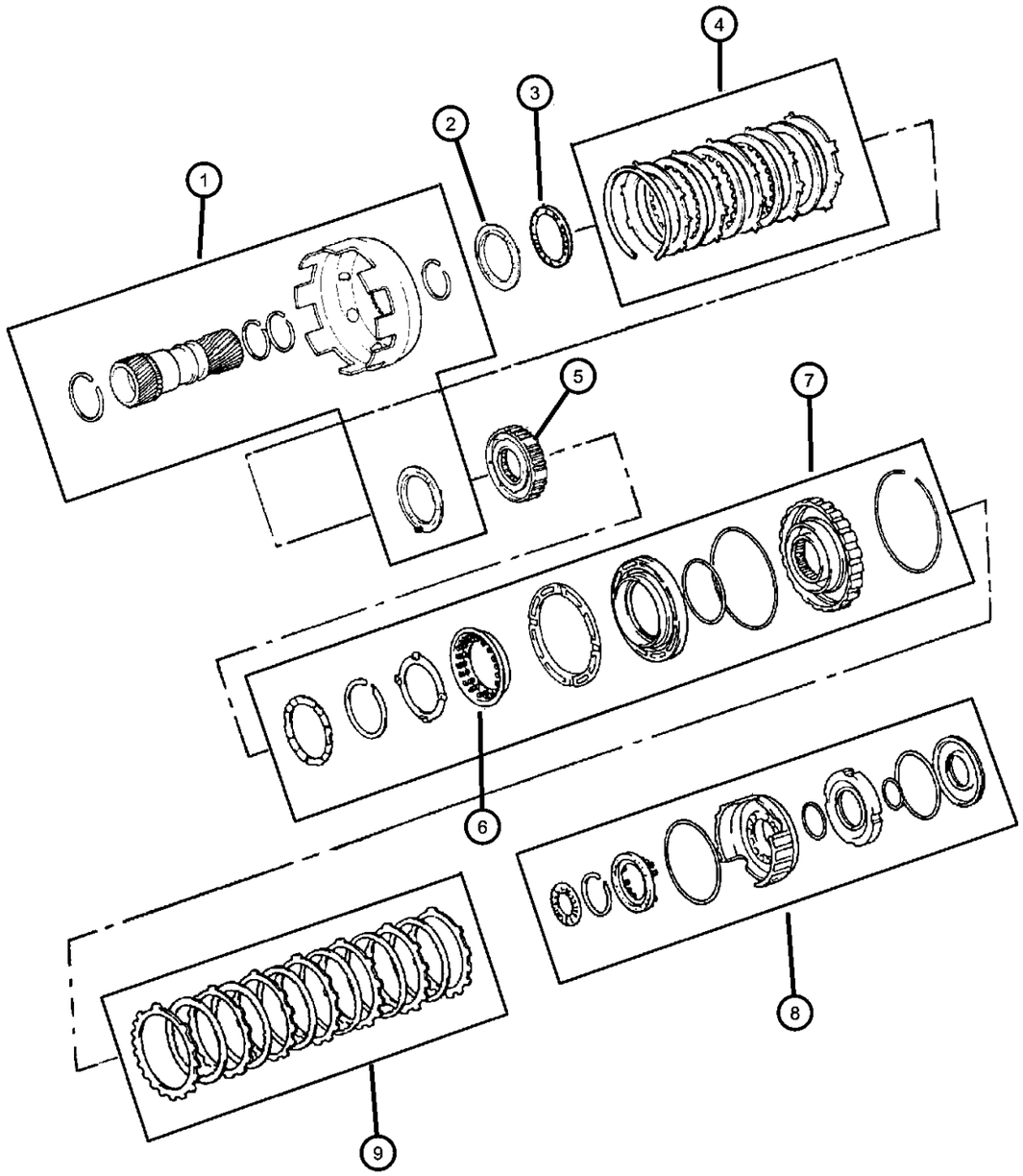

ITEM	PART NUMBER	QTY	LINE	SERIES	BODY	ENGINE	TRANS	TRIM	DESCRIPTION
Notes:									
ER0 = All 4.0L 6 Cylinder Gas Engines									
DGS = Aisin Warner 4 Speed Automatic Transmission									
1									GEAR PACKAGE, Sun
	04637035	1	B, T			ER0	DGS		
		1	J, U			ER0	DGS		
2									RACE, Thrust Bearing
	83503886	1	B, T			ER0	DGS		
		1	J, U			ER0	DGS		
3									THRUST BEARING, Needle Roller
	83503885	1	B, T			ER0	DGS		
		1	J, U			ER0	DGS		
4									REPAIR PACKAGE, 2nd Brake Coast
	04886124AA	1	B, T			ER0	DGS		
		1	J, U			ER0	DGS		
5									CLUTCH, Overrunning
	04637008	1	B, T			ER0	DGS		
		1	J, U			ER0	DGS		
6									SPRING, Return 2nd Brake
	83503837	1	B, T			ER0	DGS		
		1	J, U			ER0	DGS		
7									REPAIR PACKAGE, 2nd Brake Coast
	04636979	1	B, T			ER0	DGS		
		1	J, U			ER0	DGS		
8									GEAR PACKAGE, First And Reverse
	04637032	1	B, T			ER0	DGS		
		1	J, U			ER0	DGS		
9									DISC AND PLATE PACKAGE
	04883921AA	1	B			ER0	DGS		
		1	J			ER0	DGS		

CHEROKEE (XJ)

SERIES	LINE	BODY	ENGINE	TRANSMISSION
L = LOWLINE	T = JEEP - 2WD B = JEEP - 2WD (RHD) J = JEEP - 4WD U = JEEP - 4WD (RHD)	72 = SPORT UTILITY 2-DR 74 = SPORT UTILITY 4-DR	ENC = 2.5L 4 Cyl Turbo Diesel Engine EPB = 2.5L 4 Cylinder Engine EPE = Engine - 2.5L Power Tech I-4 Cyl. ERH = 4.0L Power Tech I-6 Engine	DDQ = 5-Speed Manual Transmission DGS = 4-Speed Automatic AW4 Transmission DGO = ALL AUTOMATIC TRANSMISSIONS DBB = ALL MANUAL TRANSMISSIONS

Gear Train AW4 (DGS)
Figure AW4-440

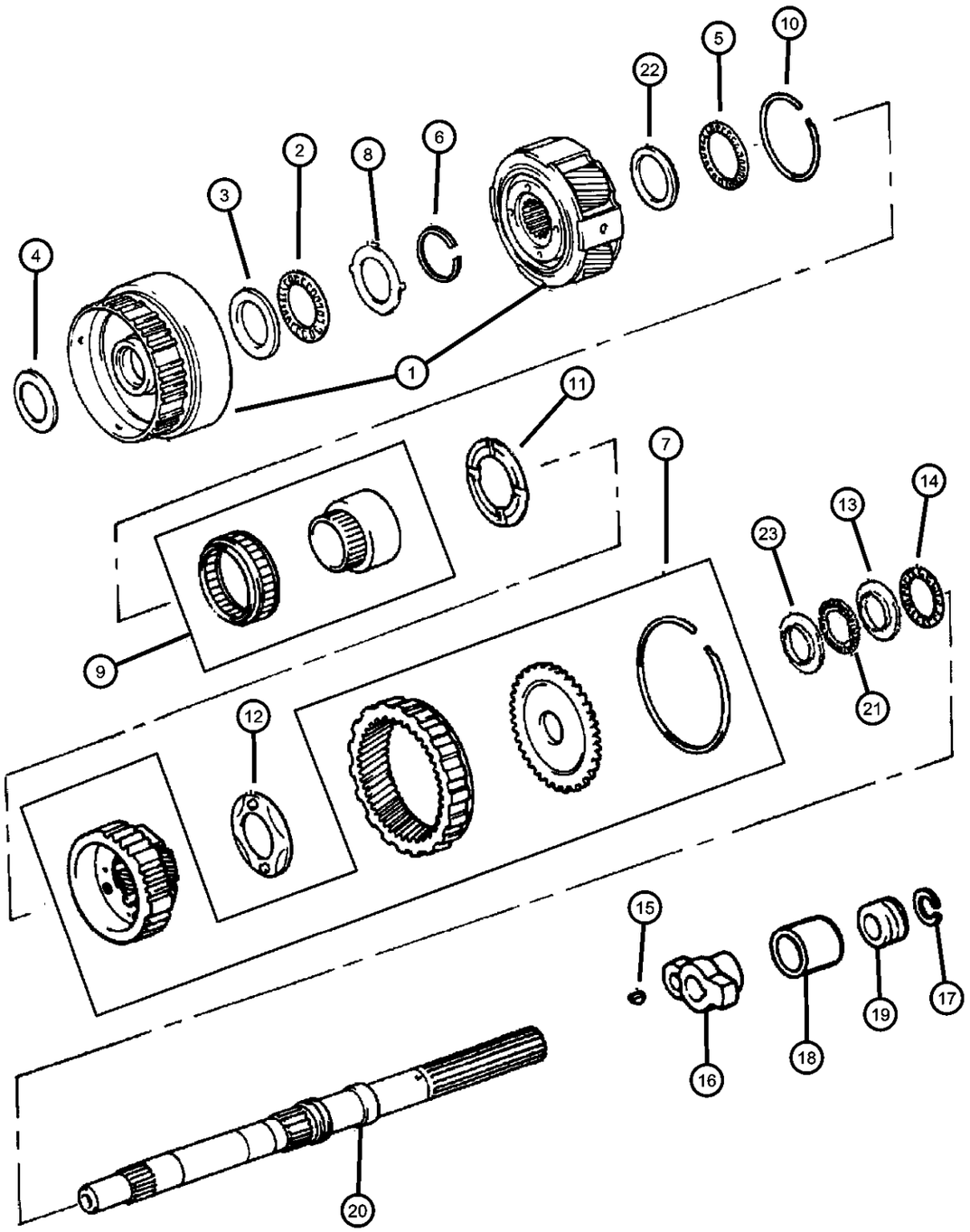

ITEM	PART NUMBER	QTY	LINE	SERIES	BODY	ENGINE	TRANS	TRIM	DESCRIPTION
Notes:									
ER0 = All 4.0L 6 Cylinder Gas Engines									
DGS = Aisin Warner 4 Speed Automatic Transmission									
1									GEAR, Planetary
	83504326	1	B, T			ER0	DGS		
		1	J, U			ER0	DGS		
2									THRUST BEARING
	83503874	1	B, T			ER0	DGS		
		1	J, U			ER0	DGS		
3									THRUST BEARING PACKAGE, Overdrive
	04637023	1	B, T			ER0	DGS		
		1	J, U			ER0	DGS		
4									RACE, Thrust Bearing
	83503801	1	B, T			ER0	DGS		
		1	J, U			ER0	DGS		
5									THRUST BEARING, Needle Roller
	83503878	1	B, T			ER0	DGS		
		1	J, U			ER0	DGS		
6									SNAP RING
	83503879	1	B, T			ER0	DGS		
		1	J, U			ER0	DGS		
7									GEAR PACKAGE, Planetary Overdrive
	04886128AA	1	B, T			ER0	DGS		
		1	J, U			ER0	DGS		
8									THRUST BEARING PACKAGE, Overdrive
	04637023	1	B, T			ER0	DGS		
		1	J, U			ER0	DGS		
9									CLUTCH PACKAGE
	04637036	1	B, T			ER0	DGS		
		1	J, U			ER0	DGS		
10									SNAP RING
	83503890	1	B, T			ER0	DGS		
		1	J, U			ER0	DGS		

CHEROKEE (XJ)

SERIES	LINE	BODY	ENGINE	TRANSMISSION
L = LOWLINE	T = JEEP - 2WD B = JEEP - 2WD (RHD) J = JEEP - 4WD U = JEEP - 4WD (RHD)	72 = SPORT UTILITY 2-DR 74 = SPORT UTILITY 4-DR	ENC = 2.5L 4 Cyl Turbo Diesel Engine EPB = 2.5L 4 Cylinder Engine EPE = Engine - 2.5L Power Tech I-4 Cyl. ERH = 4.0L Power Tech I-6 Engine	DDQ = 5-Speed Manual Transmission DGS = 4-Speed Automatic AW4 Transmission DGO = ALL AUTOMATIC TRANSMISSIONS DBB = ALL MANUAL TRANSMISSIONS

Gear Train AW4 (DGS)
Figure AW4-440

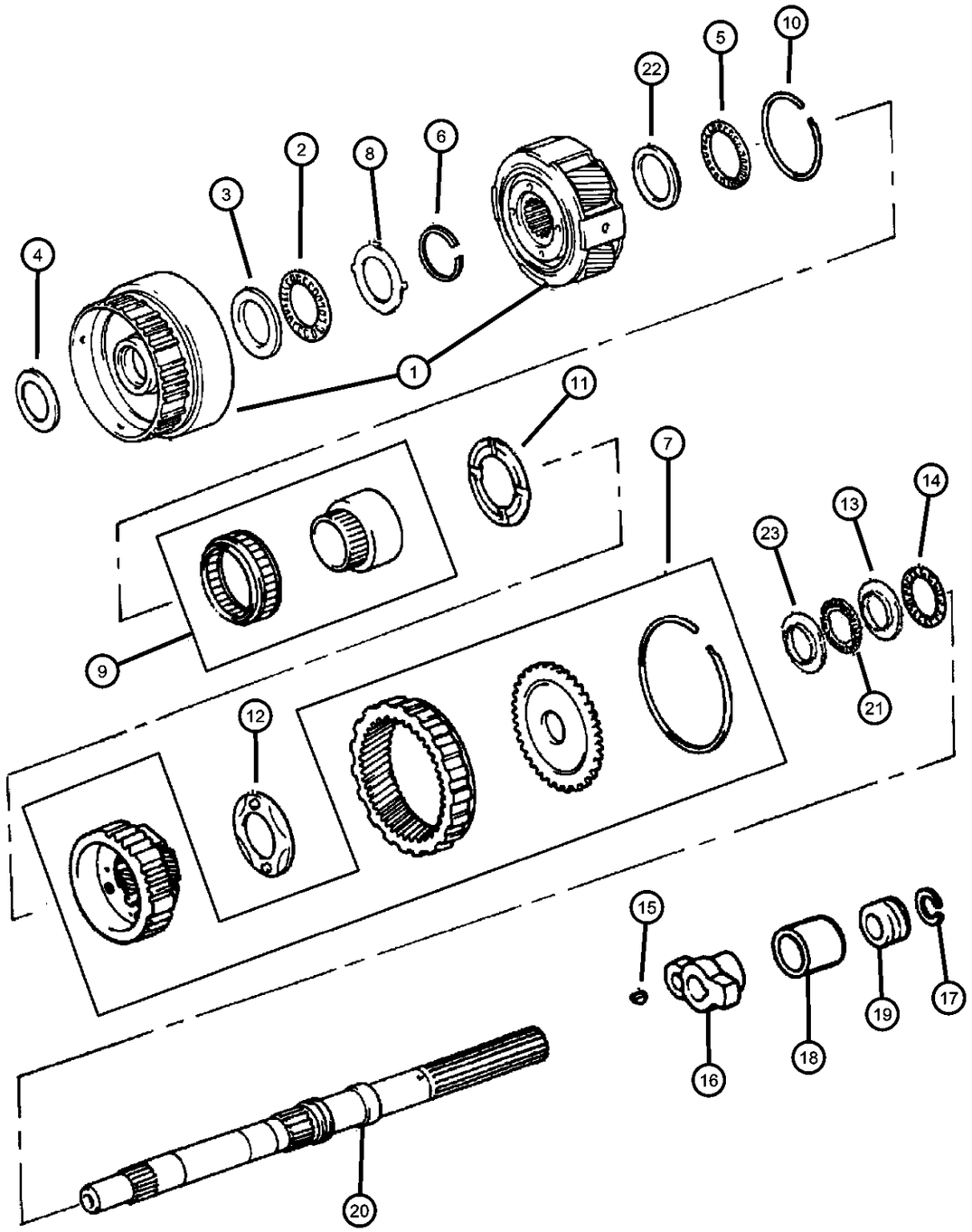

ITEM	PART NUMBER	QTY	LINE	SERIES	BODY	ENGINE	TRANS	TRIM	DESCRIPTION
11									THRUST WASHER, Planetary Carrier
	83503891	1	B, T			ER0	DGS		
		1	J, U			ER0	DGS		
12									THRUST WASHER, Planetary Carrier
	83503893	1	B, T			ER0	DGS		
		1	J, U			ER0	DGS		
13									RACE, Thrust Bearing
	83503887	1	B, T			ER0	DGS		
		1	J, U			ER0	DGS		
14									THRUST BEARING, Needle Roller
	83503897	1	B, T			ER0	DGS		
		1	J, U			ER0	DGS		
15									KEY, Woodruff
	83503947	1	B, T			ER0	DGS		
		1	J, U			ER0	DGS		
16									SENSOR, Transmission Output Speed
	83503946	1	B, T			ER0	DGS		
		1	J, U			ER0	DGS		
17									SNAP RING
	83503943	1	J, U			ER0	DGS		4 WD
	83503945	1	B, T			ER0	DGS		2 Wd
18	83503705	1	B, T			ER0	DGS		SPACER, Speedometer Gear, 2 wd
19	83503704	1	B, T			ER0	DGS		GEAR, Speedometer Drive, 2 WD
20									MAINSHAFT, Transmission
	04636789	1	J			ER0	DGS		4 WD
	83503944	1	B, T			ER0	DGS		2 WD
21									THRUST BEARING, Needle Roller
	83503885	1	B, T			ER0	DGS		
		1	J, U			ER0	DGS		
22									RACE, Thrust Bearing
	83503877	1	B, T			ER0	DGS		

CHEROKEE (XJ)

SERIES	LINE	BODY	ENGINE	TRANSMISSION
L = LOWLINE	T = JEEP - 2WD B = JEEP - 2WD (RHD) J = JEEP - 4WD U = JEEP - 4WD (RHD)	72 = SPORT UTILITY 2-DR 74 = SPORT UTILITY 4-DR	ENC = 2.5L 4 Cyl Turbo Diesel Engine EPB = 2.5L 4 Cylinder Engine EPE = Engine - 2.5L Power Tech I-4 Cyl. ERH = 4.0L Power Tech I-6 Engine	DDQ = 5-Speed Manual Transmission DGS = 4-Speed Automatic AW4 Transmission DGO = ALL AUTOMATIC TRANSMISSIONS DBB = ALL MANUAL TRANSMISSIONS

Gear Train AW4 (DGS)
Figure AW4-440

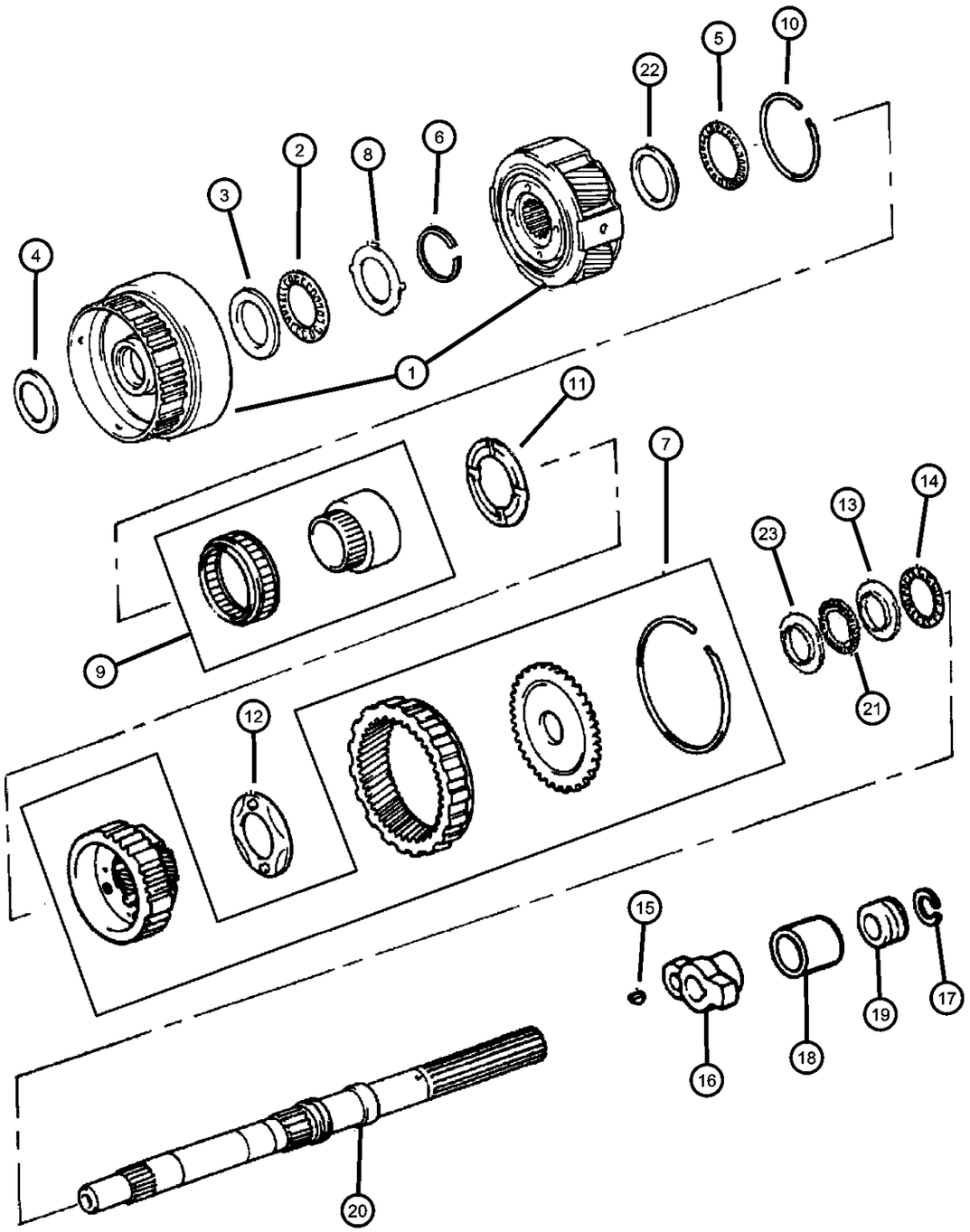

ITEM	PART NUMBER	QTY	LINE	SERIES	BODY	ENGINE	TRANS	TRIM	DESCRIPTION
		1	J, U			ER0	DGS		
23									RACE, Thrust Bearing
	83503886	1	B, T			ER0	DGS		
		1	J, U			ER0	DGS		

CHEROKEE (XJ)

SERIES	LINE	BODY	ENGINE	TRANSMISSION
L = LOWLINE	T = JEEP - 2WD B = JEEP - 2WD (RHD) J = JEEP - 4WD U = JEEP - 4WD (RHD)	72 = SPORT UTILITY 2-DR 74 = SPORT UTILITY 4-DR	ENC = 2.5L 4 Cyl Turbo Diesel Engine EPB = 2.5L 4 Cylinder Engine EPE = Engine - 2.5L Power Tech I-4 Cyl. ERH = 4.0L Power Tech I-6 Engine	DDQ = 5-Speed Manual Transmission DGS = 4-Speed Automatic AW4 Transmission DGO = ALL AUTOMATIC TRANSMISSIONS DBB = ALL MANUAL TRANSMISSIONS

Bands AW4 (DGS)
Figure AW4-510

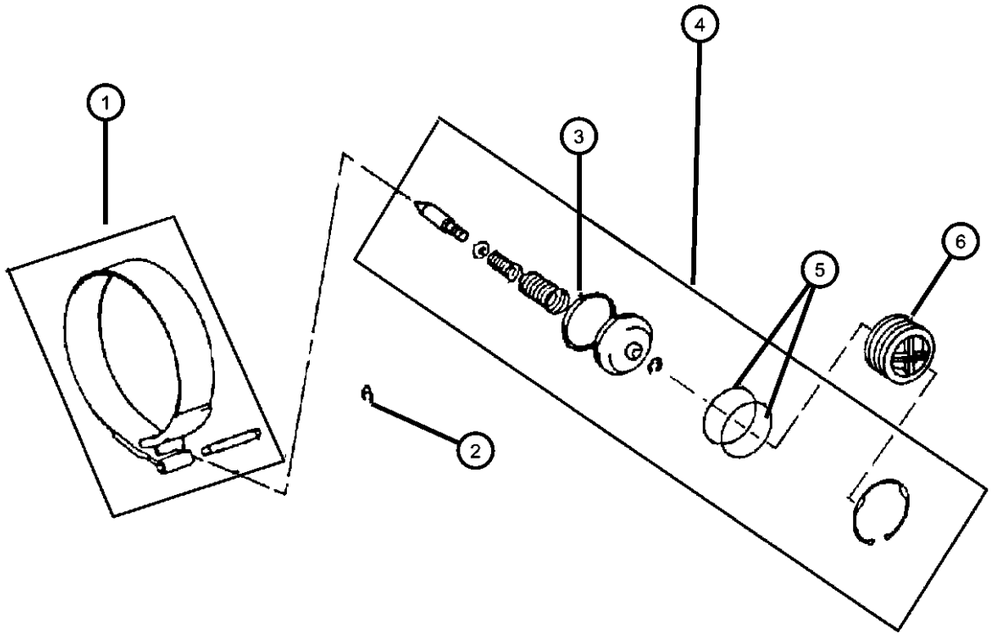

ITEM	PART NUMBER	QTY	LINE	SERIES	BODY	ENGINE	TRANS	TRIM	DESCRIPTION
Notes:									
ER0 = All 4.0L 6 Cylinder Gas Engines									
DGS = Aisin Warner 4 Speed Automatic Transmission									
1									BAND PACKAGE, Transmission Brake
	04886125AA	1	B, T			ER0	DGS		
		1	J, U			ER0	DGS		
2		1							E RING, (NOT SERVICED)
3									SEAL, Transmission Brake
	83503849	1	B, T			ER0	DGS		
		1	J, U			ER0	DGS		
4									PISTON, Brake
	83504299	1	B, T			ER0	DGS		
		1	J, U			ER0	DGS		
5									O RING, Transmission Coast Break
	83503855	1	B, T			ER0	DGS		
		1	J, U			ER0	DGS		
6									COVER, Brake Band
	83503853	1	B, T			ER0	DGS		
		1	J, U			ER0	DGS		

CHEROKEE (XJ)

SERIES	LINE	BODY	ENGINE	TRANSMISSION
L = LOWLINE	T = JEEP - 2WD B = JEEP - 2WD (RHD) J = JEEP - 4WD U = JEEP - 4WD (RHD)	72 = SPORT UTILITY 2-DR 74 = SPORT UTILITY 4-DR	ENC = 2.5L 4 Cyl Turbo Diesel Engine EPB = 2.5L 4 Cylinder Engine EPE = Engine - 2.5L Power Tech I-4 Cyl. ERH = 4.0L Power Tech I-6 Engine	DDQ = 5-Speed Manual Transmission DGS = 4-Speed Automatic AW4 Transmission DGO = ALL AUTOMATIC TRANSMISSIONS DBB = ALL MANUAL TRANSMISSIONS

Valve Body AW4 (DGS)
Figure AW4-710

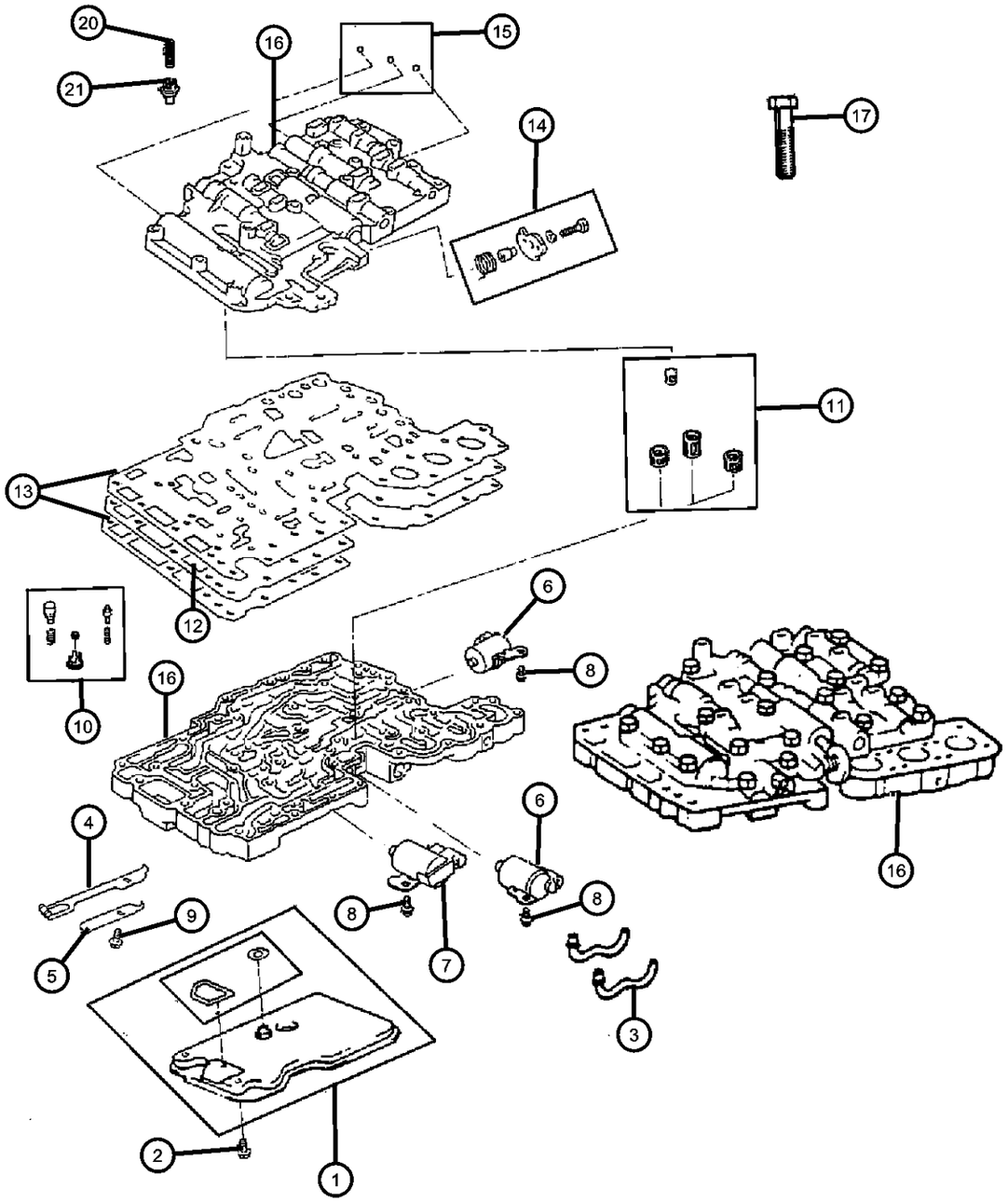

ITEM	PART NUMBER	QTY	LINE	SERIES	BODY	ENGINE	TRANS	TRIM	DESCRIPTION
Notes:									
ER0 = All 4.0L 6 Cylinder Gas Engines									
DGS = Aisin Warner 4 Speed Automatic Transmission									
1									FILTER, Valve Body
	83504032	1	B, T			ER0	DGS		
		1	J, U			ER0	DGS		
2									BOLT, Hex Head, M6x1.00x12
	83504031	1	B, T			ER0	DGS		
		1	J, U			ER0	DGS		
3									TUBE, Valve Body
	83504334	1	B, T			ER0	DGS		
		1	J, U			ER0	DGS		
4									SPRING, Detent Manual
	83504016	1	B, T			ER0	DGS		
		1	J, U			ER0	DGS		
5									COVER, Transmission Detent
	83504015	1	B, T			ER0	DGS		
		1	J, U			ER0	DGS		
6									SOLENOID, Transmission
	04797402	1	B, T			ER0	DGS		
		1	J, U			ER0	DGS		
7									SOLENOID, Transmission
	04797403	1	B, T			ER0	DGS		
		1	J, U			ER0	DGS		
8									BOLT, Hex Head, M6x1.00x12
	83504031	1	B, T			ER0	DGS		
		1	J, U			ER0	DGS		
9									BOLT, M6x1.00x32
	83504014	1	B, T			ER0	DGS		
		1	J, U			ER0	DGS		
10									BODY, Check Ball
	83504335	1	B, T			ER0	DGS		
		1	J, U			ER0	DGS		
11									FILTER, Valve Body

CHEROKEE (XJ)

SERIES	LINE	BODY	ENGINE	TRANSMISSION
L = LOWLINE	T = JEEP - 2WD B = JEEP - 2WD (RHD) J = JEEP - 4WD U = JEEP - 4WD (RHD)	72 = SPORT UTILITY 2-DR 74 = SPORT UTILITY 4-DR	ENC = 2.5L 4 Cyl Turbo Diesel Engine EPB = 2.5L 4 Cylinder Engine EPE = Engine - 2.5L Power Tech I-4 Cyl. ERH = 4.0L Power Tech I-6 Engine	DDQ = 5-Speed Manual Transmission DGS = 4-Speed Automatic AW4 Transmission DGO = ALL AUTOMATIC TRANSMISSIONS DBB = ALL MANUAL TRANSMISSIONS

Valve Body AW4 (DGS)
Figure AW4-710

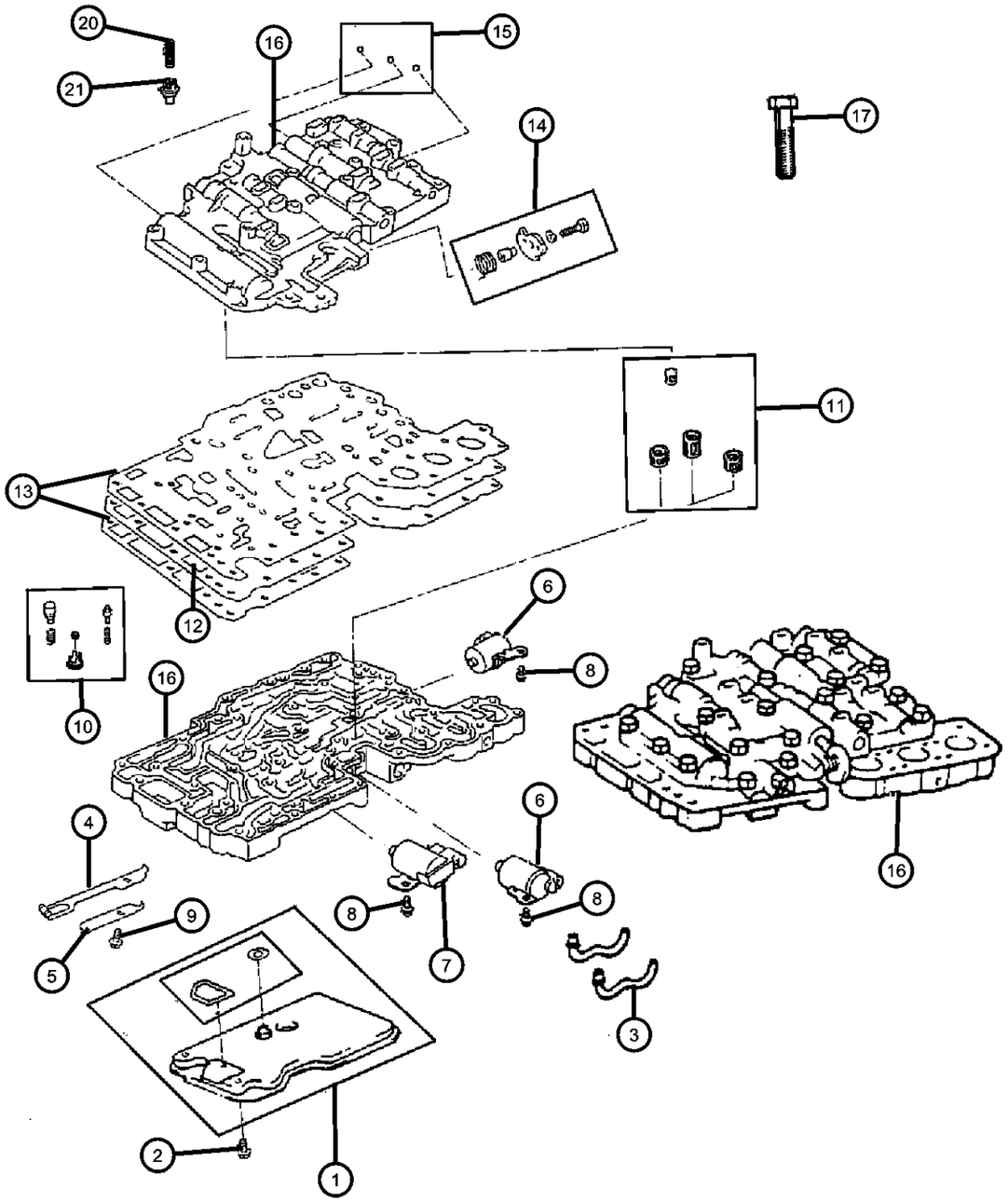

ITEM	PART NUMBER	QTY	LINE	SERIES	BODY	ENGINE	TRANS	TRIM	DESCRIPTION
	83504336	1	B, T			ER0	DGS		
		1	J, U			ER0	DGS		
12									PLATE, Transmission Valve Body
	04637468	1	B, T			ER0	DGS		
		1	J, U			ER0	DGS		
13									GASKET, Valve Body
	04882361	1	B, T			ER0	DGS		
		1	J, U			ER0	DGS		
14									CAM PACKAGE, Throttle Valve
	04637026	1	B, T			ER0	DGS		
		1	J, U			ER0	DGS		
15									CHECK BALL PACKAGE, Vavle Body
	04637031	1	B, T			ER0	DGS		
		1	J, U			ER0	DGS		
16									VALVE BODY
	04797404	1	B, T			ER0	DGS		
		1	J, U			ER0	DGS		
17									BOLT, Hex Head, M6x1.00x12
	83504031	1	B, T			ER0	DGS		
		1	J, U			ER0	DGS		
-18									BOLT, M6x1.00x32
	83504014	1	B, T			ER0	DGS		M6x1.00x16
		1	J, U			ER0	DGS		M6x1.00x16
	83504133	1	B, T			ER0	DGS		M6x1.00x23
		1	J, U			ER0	DGS		M6x1.00x23
	83504134	1	B, T			ER0	DGS		
		1	J, U			ER0	DGS		
-19									BOLT
	83504011	1	B, T			ER0	DGS		M5x0.8x20
		1	J, U			ER0	DGS		M5x0.8x20
	83504012	1	B, T			ER0	DGS		M5x0.8x28
		1	J, U			ER0	DGS		M5x0.8x28

CHEROKEE (XJ)

SERIES	LINE	BODY	ENGINE	TRANSMISSION
L = LOWLINE	T = JEEP - 2WD B = JEEP - 2WD (RHD) J = JEEP - 4WD U = JEEP - 4WD (RHD)	72 = SPORT UTILITY 2-DR 74 = SPORT UTILITY 4-DR	ENC = 2.5L 4 Cyl Turbo Diesel Engine EPB = 2.5L 4 Cylinder Engine EPE = Engine - 2.5L Power Tech I-4 Cyl. ERH = 4.0L Power Tech I-6 Engine	DDQ = 5-Speed Manual Transmission DGS = 4-Speed Automatic AW4 Transmission DGO = ALL AUTOMATIC TRANSMISSIONS DBB = ALL MANUAL TRANSMISSIONS

Valve Body AW4 (DGS)
Figure AW4-710

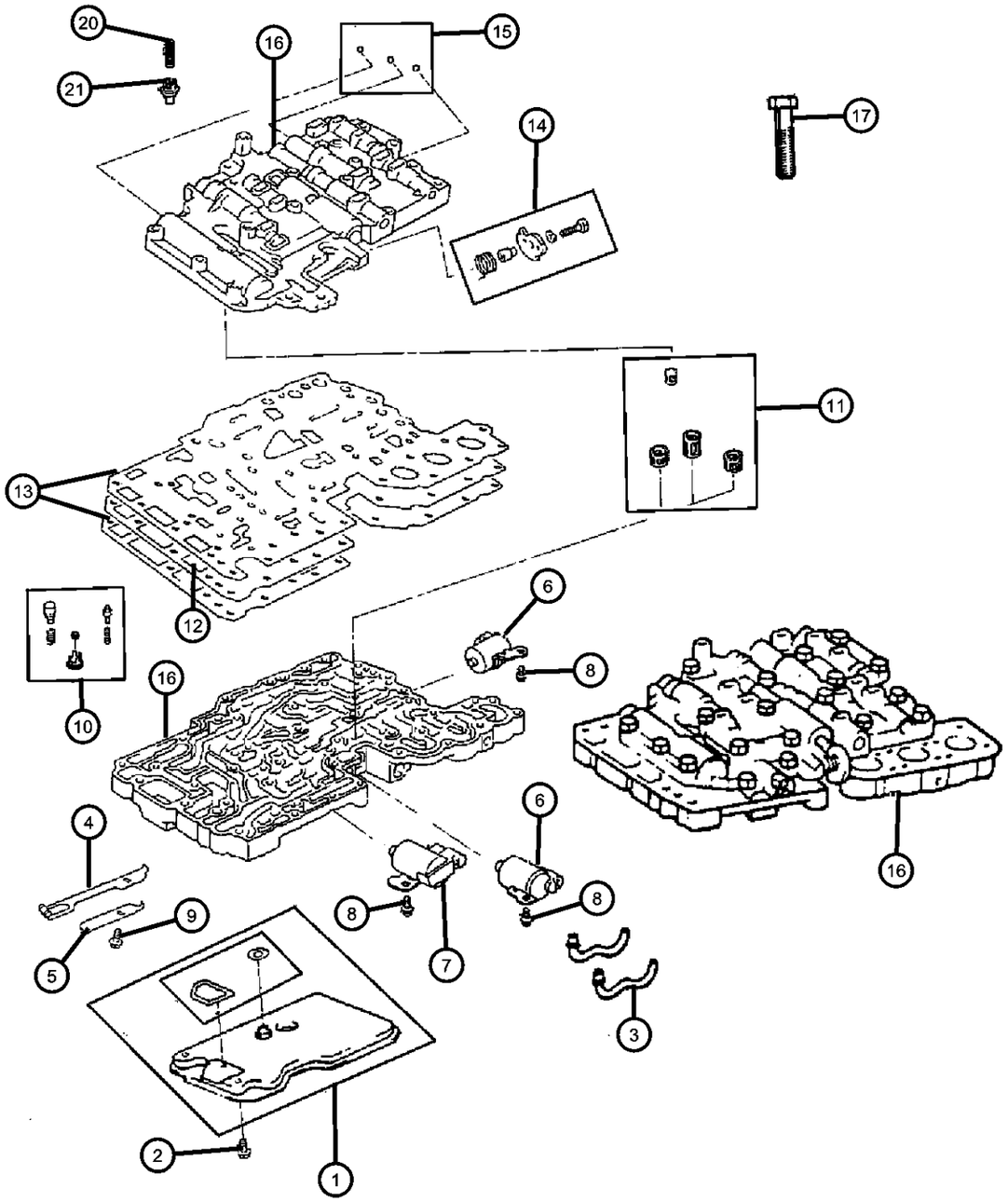

ITEM	PART NUMBER	QTY	LINE	SERIES	BODY	ENGINE	TRANS	TRIM	DESCRIPTION
	83504013	1	B, T			ER0	DGS		M5x0.8x38
		1	J, U			ER0	DGS		M5x0.8x38
20									SPRING, Accumulator
	83504036	1	B, T			ER0	DGS		
		1	J, U			ER0	DGS		
21									BODY, Check Ball
	83504042	1	B, T			ER0	DGS		
		1	J, U			ER0	DGS		

CHEROKEE (XJ)

SERIES	LINE	BODY	ENGINE	TRANSMISSION
L = LOWLINE	T = JEEP - 2WD B = JEEP - 2WD (RHD) J = JEEP - 4WD U = JEEP - 4WD (RHD)	72 = SPORT UTILITY 2-DR 74 = SPORT UTILITY 4-DR	ENC = 2.5L 4 Cyl Turbo Diesel Engine EPB = 2.5L 4 Cylinder Engine EPE = Engine - 2.5L Power Tech I-4 Cyl. ERH = 4.0L Power Tech I-6 Engine	DDQ = 5-Speed Manual Transmission DGS = 4-Speed Automatic AW4 Transmission DGO = ALL AUTOMATIC TRANSMISSIONS DBB = ALL MANUAL TRANSMISSIONS

Accumulator Piston AW4 (DGS)
Figure AW4-720

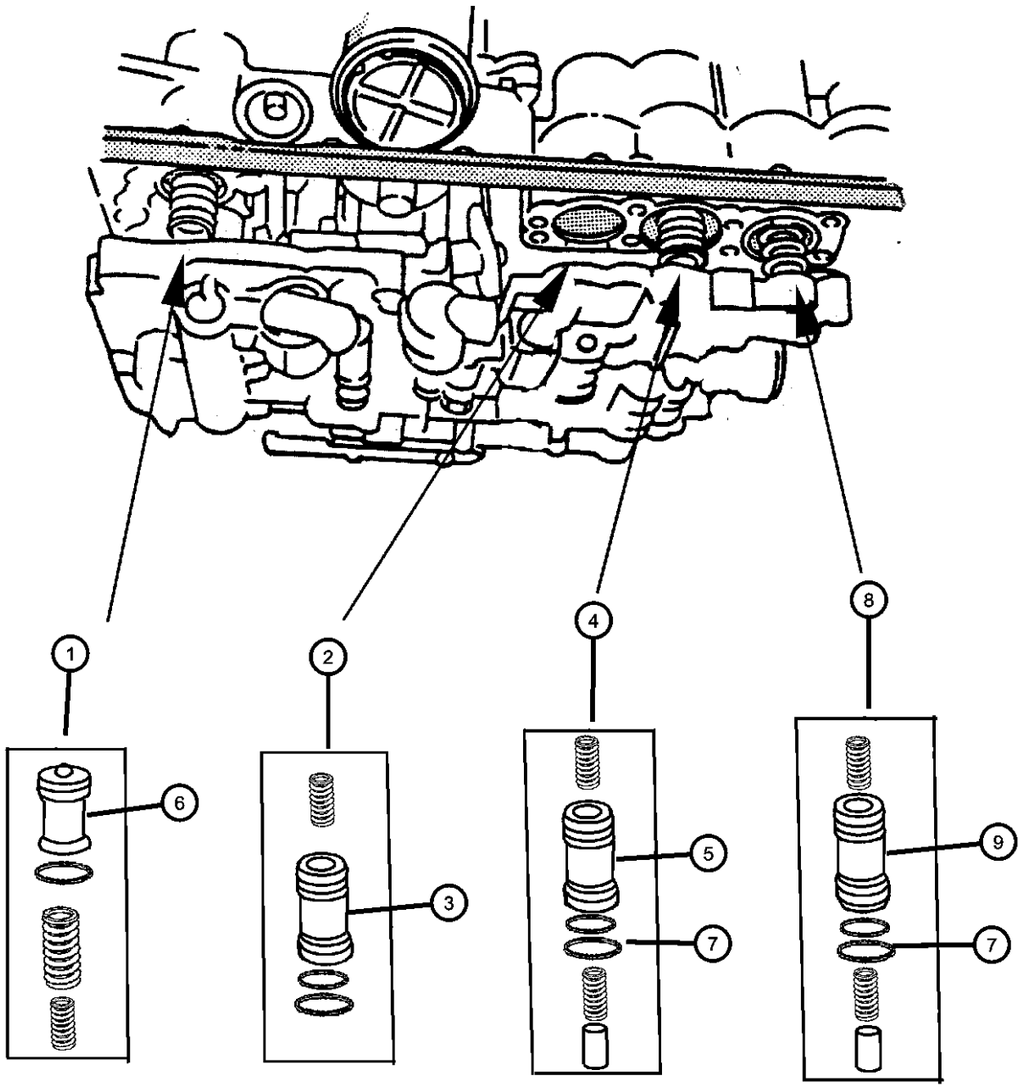

ITEM	PART NUMBER	QTY	LINE	SERIES	BODY	ENGINE	TRANS	TRIM	DESCRIPTION
Notes: ER0 = All 4.0L 6 Cylinder Gas Engines DGS = Aisin Warner 4 Speed Automatic Transmission									
1									PISTON, Accumulator
	83504343	1	B, T			ER0	DGS		C-0
		1	J, U			ER0	DGS		C-0
2									ACCUMULATOR PACKAGE, Piston
	04637028	1	B, T			ER0	DGS		B-0
		1	J, U			ER0	DGS		B-0
3									PISTON, Accumulator
	04636788	1	B, T			ER0	DGS		
		1	J, U			ER0	DGS		
4									ACCUMULATOR PACKAGE, Piston
	04637029	1	B, T			ER0	DGS		C-2
		1	J, U			ER0	DGS		C-2
5									PISTON, Accumulator
	04636786	1	B, T			ER0	DGS		C-2
		1	J, U			ER0	DGS		C-2
6									PISTON, Accumulator
	83504017	1	B, T			ER0	DGS		C-0
		1	J, U			ER0	DGS		C-0
7									O RING, Transmission Accumulator/Strainer
	83504029	1	B, T			ER0	DGS		
		1	J, U			ER0	DGS		
8									ACCUMULATOR PACKAGE, Piston
	05003158AA	1	B, T			ER0	DGS		
		1	J, U			ER0	DGS		
9									PISTON, Accumulator
	04636787	1	B, T			ER0	DGS		B-2
		1	J, U			ER0	DGS		B-2

CHEROKEE (XJ)

SERIES	LINE	BODY	ENGINE	TRANSMISSION
L = LOWLINE	T = JEEP - 2WD B = JEEP - 2WD (RHD) J = JEEP - 4WD U = JEEP - 4WD (RHD)	72 = SPORT UTILITY 2-DR 74 = SPORT UTILITY 4-DR	ENC = 2.5L 4 Cyl Turbo Diesel Engine EPB = 2.5L 4 Cylinder Engine EPE = Engine - 2.5L Power Tech I-4 Cyl. ERH = 4.0L Power Tech I-6 Engine	DDQ = 5-Speed Manual Transmission DGS = 4-Speed Automatic AW4 Transmission DGO = ALL AUTOMATIC TRANSMISSIONS DBB = ALL MANUAL TRANSMISSIONS

Lock, Parking AW4 (DGS)
Figure AW4-730

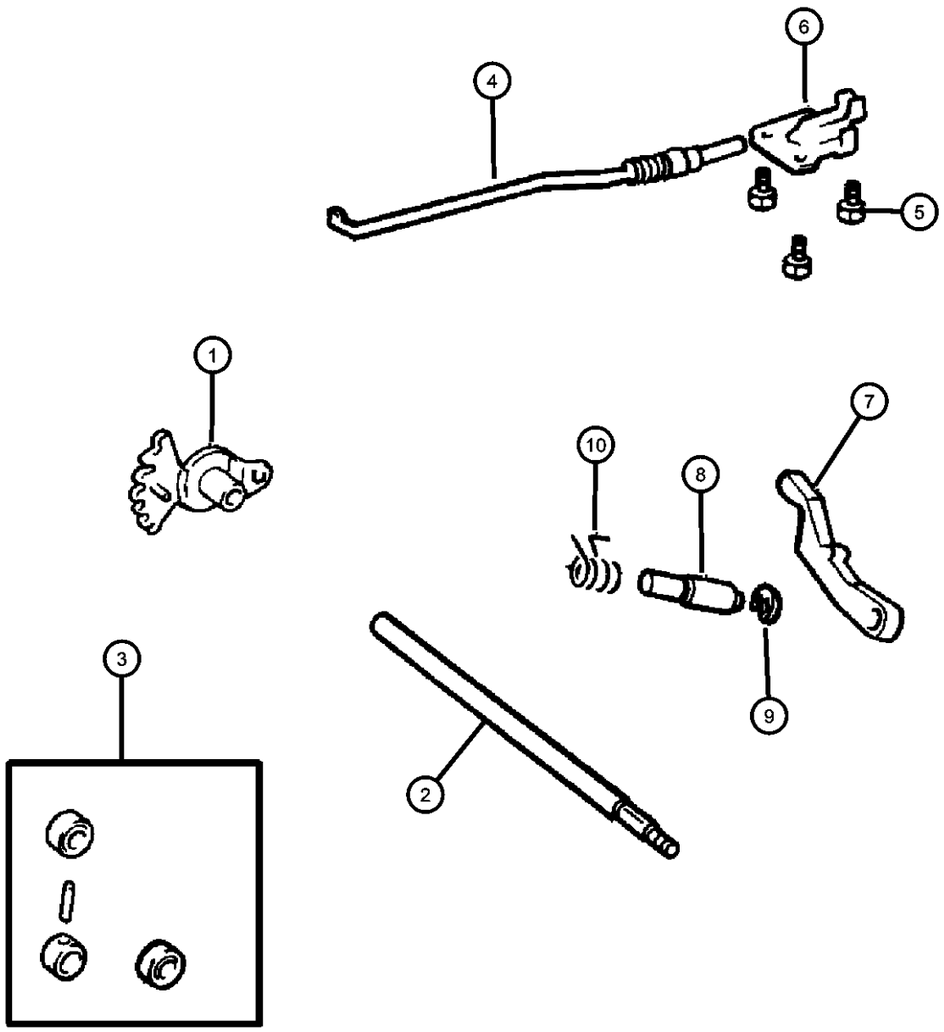

ITEM	PART NUMBER	QTY	LINE	SERIES	BODY	ENGINE	TRANS	TRIM	DESCRIPTION
Notes:									
ER0 = All 4.0L 6 Cylinder Gas Engines									
DGS = Aisin Warner 4 Speed Automatic Transmission									
1									LEVER, Manual Valve
	83503774	1	B, T			ER0	DGS		
		1	J, U			ER0	DGS		
2									SHAFT, Manual Valve
	83503725	1	B, T			ER0	DGS		
		1	J, U			ER0	DGS		
3									LEVER REPAIR PACKAGE, Valve Body
	83504332	1	B, T			ER0	DGS		
		1	J, U			ER0	DGS		
4									ROD, Transmission Pawl
	04886042AA	1	B, T			ER0	DGS		
		1	J, U			ER0	DGS		
5									BOLT, M6x1.00x32
	83503783	1	B, T			ER0	DGS		
		1	J, U			ER0	DGS		
6									BRACKET, Park Lock
	04886041AA	1	B, T			ER0	DGS		
		1	J, U			ER0	DGS		
7									PAWL, Parking Sprag
	04886040AA	1	B, T			ER0	DGS		
		1	J, U			ER0	DGS		
8									SHAFT, Parking Sprag
	83503777	1	B, T			ER0	DGS		
		1	J, U			ER0	DGS		
9									SNAP RING, Parking Pawl
	83503776	1	B, T			ER0	DGS		
		1	J, U			ER0	DGS		
10									SPRING, Park Lock
	83503778	1	B, T			ER0	DGS		
		1	J, U			ER0	DGS		

CHEROKEE (XJ)

SERIES	LINE	BODY	ENGINE	TRANSMISSION
L = LOWLINE	T = JEEP - 2WD B = JEEP - 2WD (RHD) J = JEEP - 4WD U = JEEP - 4WD (RHD)	72 = SPORT UTILITY 2-DR 74 = SPORT UTILITY 4-DR	ENC = 2.5L 4 Cyl Turbo Diesel Engine EPB = 2.5L 4 Cylinder Engine EPE = Engine - 2.5L Power Tech I-4 Cyl. ERH = 4.0L Power Tech I-6 Engine	DDQ = 5-Speed Manual Transmission DGS = 4-Speed Automatic AW4 Transmission DGO = ALL AUTOMATIC TRANSMISSIONS DBB = ALL MANUAL TRANSMISSIONS

Gearshift Controls AW4 (DGS)
Figure AW4-1210

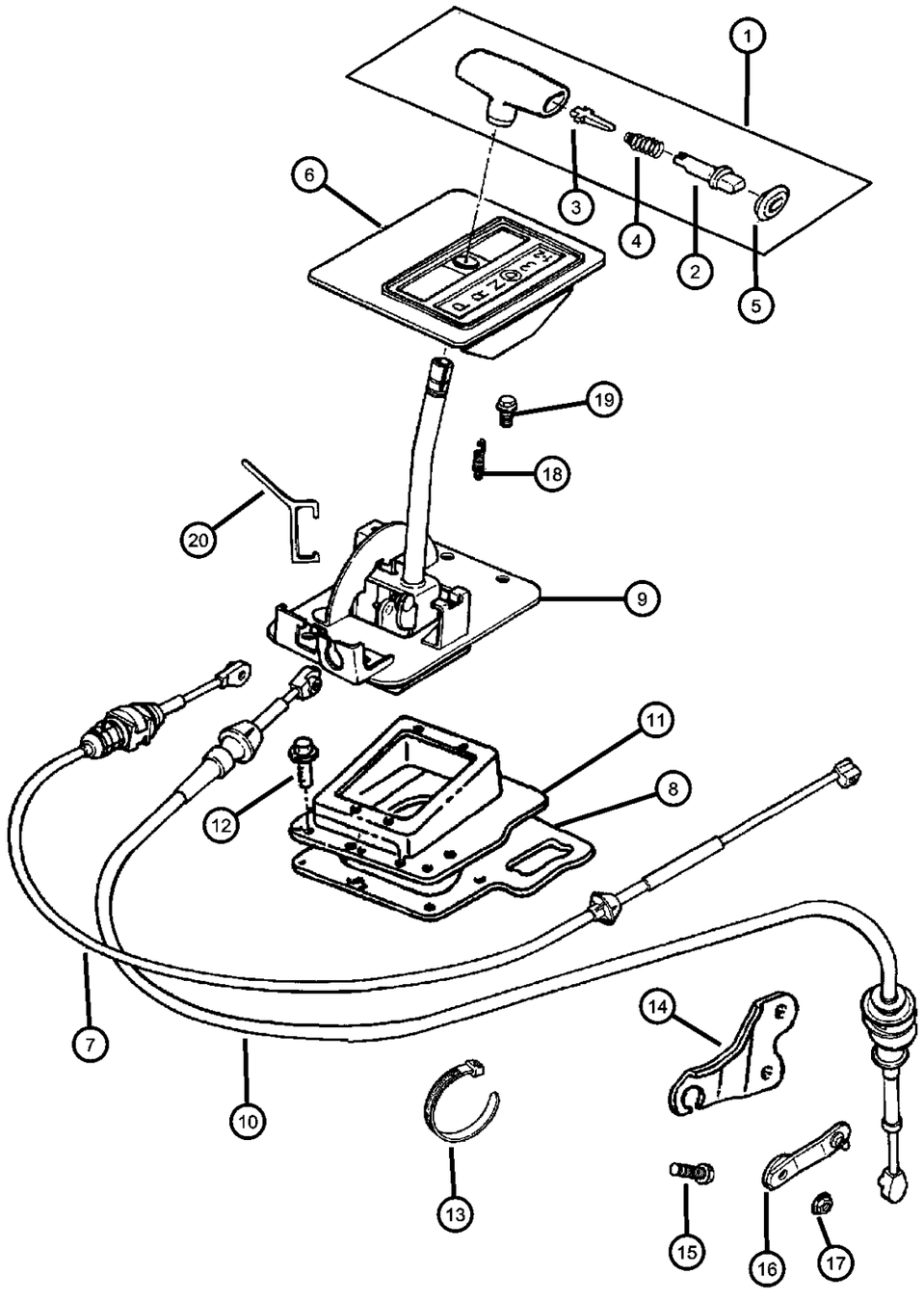

ITEM	PART NUMBER	QTY	LINE	SERIES	BODY	ENGINE	TRANS	TRIM	DESCRIPTION
Notes: EP0 = All 2.5L 4 Cylinder Gas Engines; ER0 = All 4.0L 6 Cylinder Gas Engines; DGS = Aisin Warner 4 Speed Automatic Transmission; DG0 = All Automatic Transmissions									
1	52104028	1				EP0, ER0	DG0		HANDLE, Gearshift
2	53000211	1				EP0, ER0	DG0		BUTTON, Gearshift Knob
3	53000865	1				EP0, ER0	DG0		LEVER, Gearshift
4	53000866	1				EP0, ER0	DG0		SPRING, Button Return
5	52077561	1				EP0, ER0	DG0		CAP, Gearshift Handle Button
6									BEZEL, Console PRNDL
	5EK03LAZ	1	J, T				DGS		
	5EK07LAZ	1	B, U				DGS		
7	52104144	1				EP0, ER0	DG0		CABLE, Park Interlock
8	52104144	1							SEAL, Shift Housing, (NOT SERVICED)
9									HOUSING, Shift Lever
	52104005	1	J, T				DG0		
	52104007	1	B, U				DG0		
10	52077532	1					DG0		CABLE, Gearshift Control
11									COVER, Gearshift
	53000704	1	J, T				DG0		
		1	B, U				DG0		
12	J4001701	9					DG0		SCREW, Hex Self Tapping, .19-16x.50
13	34201788	1				EP0, ER0			STRAP, Tie
14	53007746	1				ER0	DGS		BRACKET, Transmission Control Cable
15	34201871	2				ER0	DGS		BOLT, Hex Flange Head, M8x1.25x20
16									LEVER, Gearshift
	53007747	1	B, T			ER0	DGS		
		1	J, U			ER0	DGS		
17	J4200046	3				EP0, ER0			NUT AND WASHER, Hex Flange, M8x1.25
18	J4200046	3							SPRING, Pawl Return, (NOT SERVICED)
19									SCREW, Hex Head, M8x1.25x18

CHEROKEE (XJ)

SERIES	LINE	BODY	ENGINE	TRANSMISSION
L = LOWLINE	T = JEEP - 2WD B = JEEP - 2WD (RHD) J = JEEP - 4WD U = JEEP - 4WD (RHD)	72 = SPORT UTILITY 2-DR 74 = SPORT UTILITY 4-DR	ENC = 2.5L 4 Cyl Turbo Diesel Engine EPB = 2.5L 4 Cylinder Engine EPE = Engine - 2.5L Power Tech I-4 Cyl. ERH = 4.0L Power Tech I-6 Engine	DDQ = 5-Speed Manual Transmission DGS = 4-Speed Automatic AW4 Transmission DGO = ALL AUTOMATIC TRANSMISSIONS DBB = ALL MANUAL TRANSMISSIONS

Gearshift Controls AW4 (DGS)
Figure AW4-1210

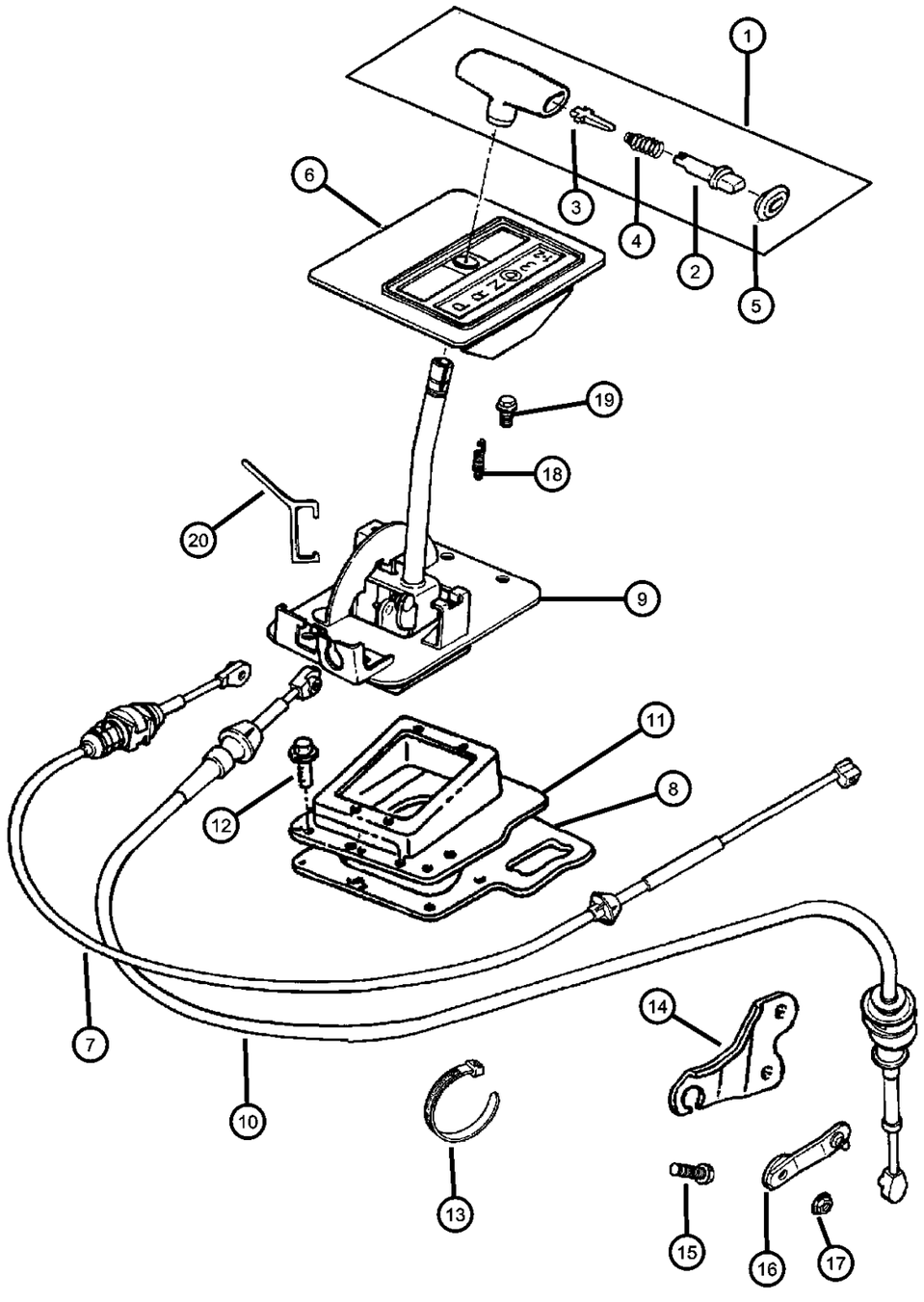

ITEM	PART NUMBER	QTY	LINE	SERIES	BODY	ENGINE	TRANS	TRIM	DESCRIPTION
	11504284	4	J, T				DG0		
		4	B, U				DG0		
20		4							GAUGE, Transmission Shifter, (NOT SERVICED)

CHEROKEE (XJ)

SERIES	LINE	BODY	ENGINE	TRANSMISSION
L = LOWLINE	T = JEEP - 2WD B = JEEP - 2WD (RHD) J = JEEP - 4WD U = JEEP - 4WD (RHD)	72 = SPORT UTILITY 2-DR 74 = SPORT UTILITY 4-DR	ENC = 2.5L 4 Cyl Turbo Diesel Engine EPB = 2.5L 4 Cylinder Engine EPE = Engine - 2.5L Power Tech I-4 Cyl. ERH = 4.0L Power Tech I-6 Engine	DDQ = 5-Speed Manual Transmission DGS = 4-Speed Automatic AW4 Transmission DGO = ALL AUTOMATIC TRANSMISSIONS DBB = ALL MANUAL TRANSMISSIONS

Group - AX

Manual Transmission 5 Speed

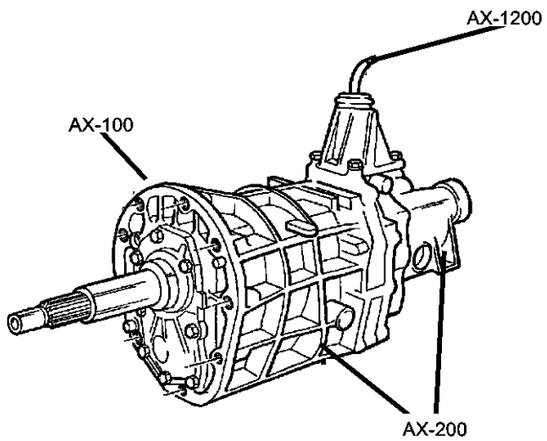

AX-100 Transmission Assembly 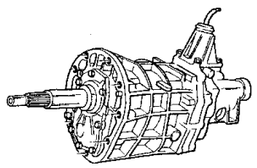	**AX-1200** Gearshift Controls 	**AX-200** Case and Extension 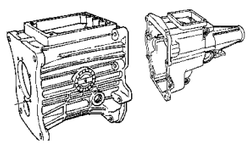	**AX-400** Gear Train 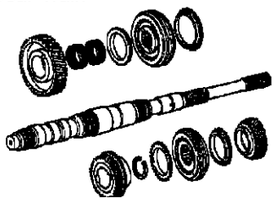
AX-900 Fork and Rails 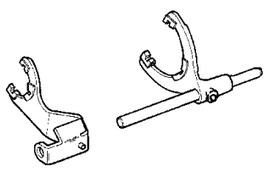			

Group - AX Manual Transmission 5 Speed

Illustration Title — Group-Fig. No.

Transmission Assembly
Transmission (DDQ) ..... Fig. AX - 110

Case and Extension
Case and Extension AX5 (DDQ) ..... Fig. AX - 210
Case and Related Parts AX 15 (DDQ) ..... Fig. AX - 215

Gear Train
Gear Train AX 5 (DDQ) ..... Fig. AX - 410
Gear Train AX 15 (DDQ) ..... Fig. AX - 415
Reverse Idler Ax 15 (DDQ) ..... Fig. AX - 420

Fork and Rails
Forks AX 5 (DDQ) ..... Fig. AX - 910
Forks AX 15 (DDQ) ..... Fig. AX - 915

Gearshift Controls
Gearshift Controls (DDQ) ..... Fig. AX - 1215

Transmission (DDQ)
Figure AX-110

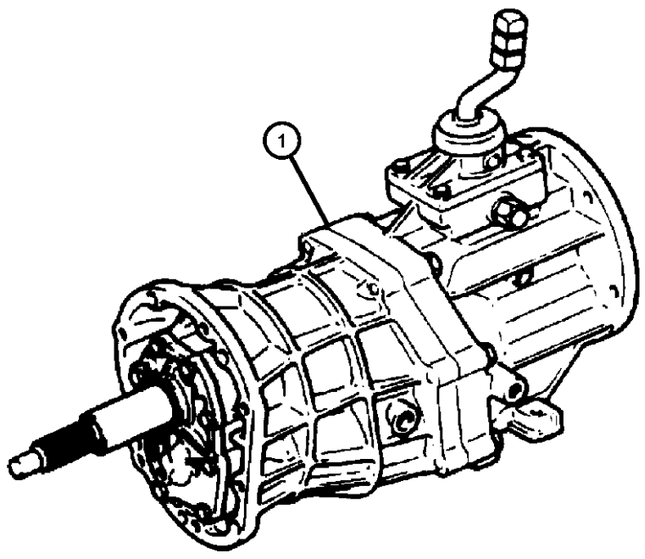

ITEM	PART NUMBER	QTY	LINE	SERIES	BODY	ENGINE	TRANS	TRIM	DESCRIPTION
Notes:									
DDQ = 5 Speed Manual Transmission									
EP0 = All 2.5L Gas Engines									
ER0 = All 4.0L 6 Cylinder Gas Engines									
ENC = 2.5L 4 Cylinder Turbo Diesel Engine									
1									TRANSMISSION, 5 Speed
	52104546	1	B, T			EP0	DDQ		
	52104547	1	J, U			EP0	DDQ		
	52107749	1	B, T			ER0	DDQ		1997 XJ
	52107752	1	J, U			EN0	DDQ		1997 XJ
	52108047	1	J, U			ER0	DDQ		1997 XJ
	52108047AB	1	J, U			ER0	DDQ		
	52108048AB	1	B, T			ER0	DDQ		
	52108121AB	1	J, U			EN0	DDQ		1997 XJ & 1998 & 1999 XJ With (ENC) Engine

CHEROKEE (XJ)

SERIES	LINE	BODY	ENGINE	TRANSMISSION
L = LOWLINE	T = JEEP - 2WD B = JEEP - 2WD (RHD) J = JEEP - 4WD U = JEEP - 4WD (RHD)	72 = SPORT UTILITY 2-DR 74 = SPORT UTILITY 4-DR	ENC = 2.5L 4 Cyl Turbo Diesel Engine EPB = 2.5L 4 Cylinder Engine EPE = Engine - 2.5L Power Tech I-4 Cyl. ERH = 4.0L Power Tech I-6 Engine	DDQ = 5-Speed Manual Transmission DGS = 4-Speed Automatic AW4 Transmission DGO = ALL AUTOMATIC TRANSMISSIONS DBB = ALL MANUAL TRANSMISSIONS

Case and Extension AX5 (DDQ)
Figure AX-210

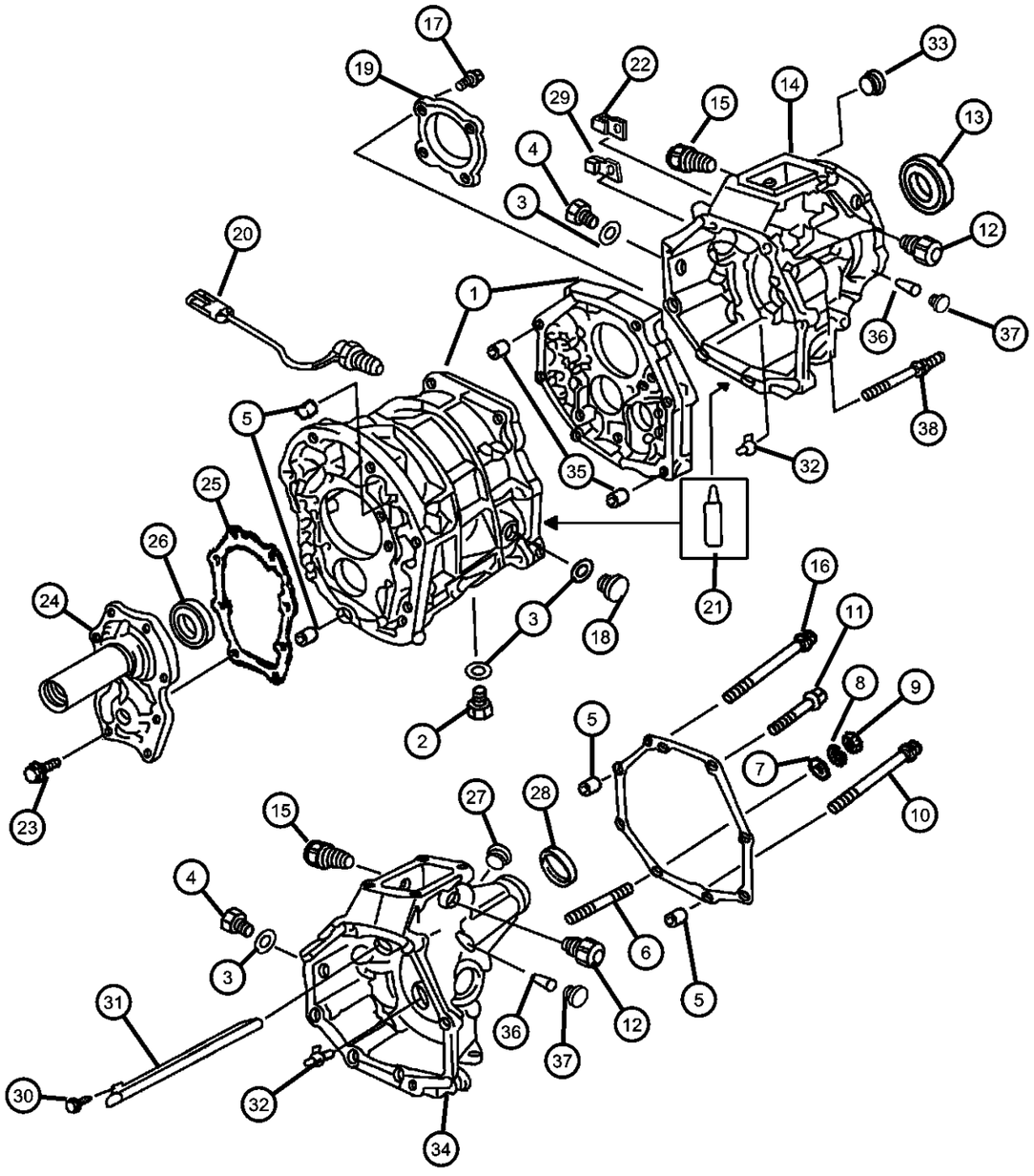

ITEM	PART NUMBER	QTY	LINE	SERIES	BODY	ENGINE	TRANS	TRIM	DESCRIPTION
Notes:									
DDQ = 5 Speed Manual Transmission									
EP0 = All 2.5L Gas Engines									
1									CASE, Transmission
	83506016	1	J, U			EP0	DDQ		52107747
		1	B, T			EP0	DDQ		52107746
		1	B, T			EP0	DDQ		52104546
		1	J, U			EP0	DDQ		52104547
2									PLUG, Differential Drain
	04543303	1	B, T			EP0	DDQ		52107746
		1	J, U			EP0	DDQ		52107747
		1	B, T			EP0	DDQ		52104546
		1	J, U			EP0	DDQ		52104547
3									GASKET, Drain Plug
	83500513	3	B, T			EP0	DDQ		52107746
		3	J, U			EP0	DDQ		52107747
		2	B, T			EP0	DDQ		52104546
		3	J, U			EP0	DDQ		52104547
4									BOLT
	83503548	1	B, T			EP0	DDQ		52107746
		1	J, U			EP0	DDQ		52107747
		1	B, T			EP0	DDQ		52104546
		1	J, U			EP0	DDQ		52104547
5									PIN, Locating
	83500504	4	B, T			EP0	DDQ		52107746
		4	J, U			EP0	DDQ		52107747
		4	B, T			EP0	DDQ		52104546
		4	J, U			EP0	DDQ		52104547
6									STUD, Double Ended, M10x1.25x98
	83500618	1	B, T			EP0	DDQ		52107746
		1	J, U			EP0	DDQ		52107747
		1	B, T			EP0	DDQ		52104546
		1	J, U			EP0	DDQ		52104547

CHEROKEE (XJ)

SERIES	LINE	BODY	ENGINE	TRANSMISSION
L = LOWLINE	T = JEEP - 2WD B = JEEP - 2WD (RHD) J = JEEP - 4WD U = JEEP - 4WD (RHD)	72 = SPORT UTILITY 2-DR 74 = SPORT UTILITY 4-DR	ENC = 2.5L 4 Cyl Turbo Diesel Engine EPB = 2.5L 4 Cylinder Engine EPE = Engine - 2.5L Power Tech I-4 Cyl. ERH = 4.0L Power Tech I-6 Engine	DDQ = 5-Speed Manual Transmission DGS = 4-Speed Automatic AW4 Transmission DGO = ALL AUTOMATIC TRANSMISSIONS DBB = ALL MANUAL TRANSMISSIONS

Case and Extension AX5 (DDQ)
Figure AX-210

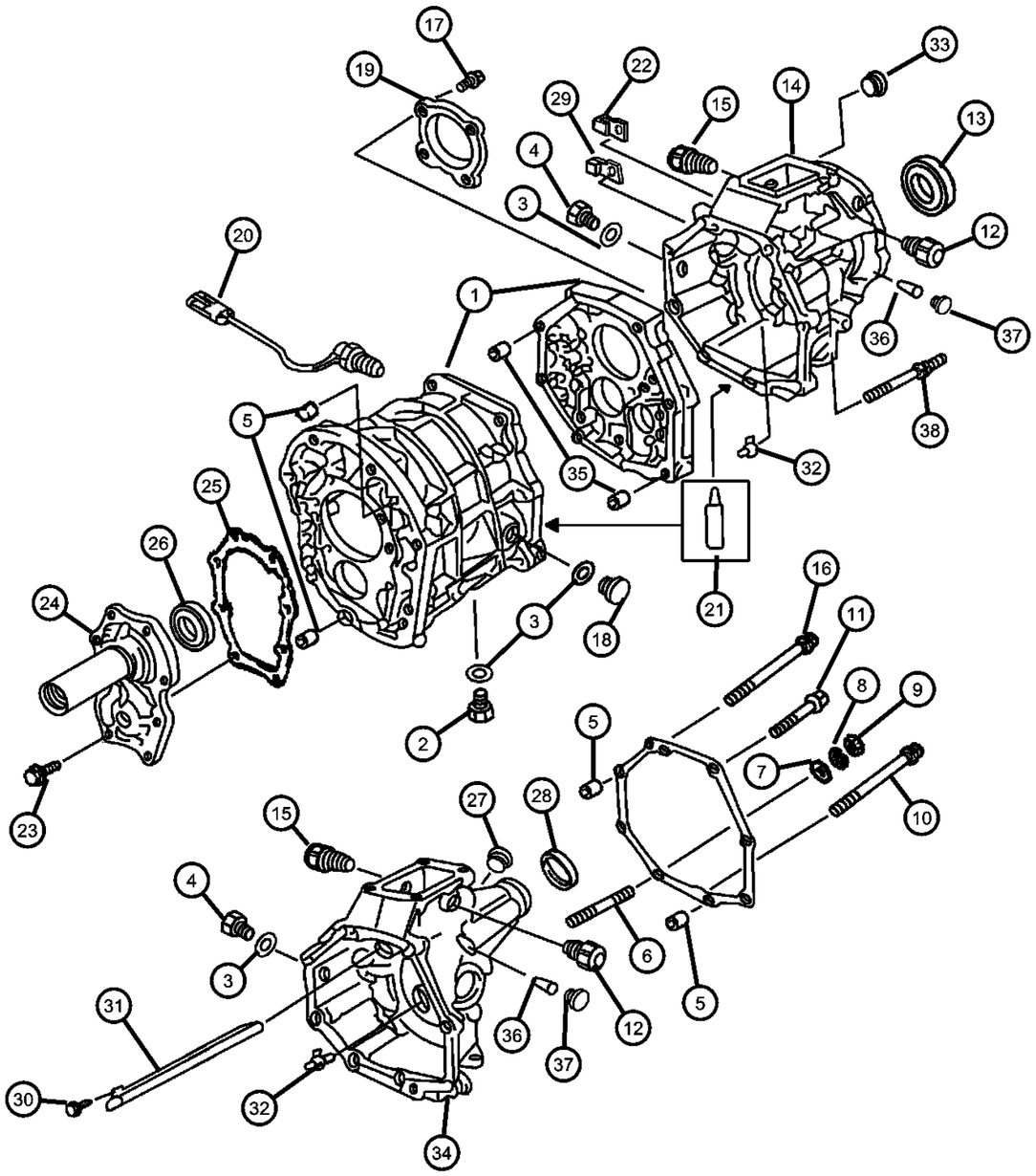

ITEM	PART NUMBER	QTY	LINE	SERIES	BODY	ENGINE	TRANS	TRIM	DESCRIPTION
7									WASHER, Flat
	83500627	1	B, T			EP0	DDQ		52107746
		1	J, U			EP0	DDQ		52107747
		1	B, T			EP0	DDQ		52104546
		1	J, U			EP0	DDQ		52104547
8									WASHER, Lock
	83500523	1	B, T			EP0	DDQ		52107746
		1	J, U			EP0	DDQ		52107747
9									NUT, Transmission Case
	83500625	1	B, T			EP0	DDQ		52107746
		1	J, U			EP0	DDQ		52107747
		1	B, T			EP0	DDQ		52104546
		1	J, U			EP0	DDQ		52104547
10									BOLT
	83503547	1	B, T			EP0	DDQ		52107746
		1	J, U			EP0	DDQ		52107747
		1	B, T			EP0	DDQ		52104546
		1	J, U			EP0	DDQ		52104547
11	83503549	6	J, U			EN0	DDQ		BOLT
12									PIN, Reverse Restrict
	83500516	1	B, T			EP0	DDQ		52107746
		1	J, U			EP0	DDQ		52107747
		1	B, T			EP0	DDQ		52104546
		1	J, U			EP0	DDQ		52104547
13									SEAL, Adapter
	83503108	1	J			EP0	DDQ		52107747
		1	J, U			EP0	DDQ		52104547
14	83506037	1	J, U			EP0	DDQ		ADAPTER, Transmission
15									PIN, Reverse
	83500515	1	B, T			EP0	DDQ		52107746
		1	J, U			EP0	DDQ		52107747
		1	B, T			EP0	DDQ		52104546
		1	J, U			EP0	DDQ		52104547

CHEROKEE (XJ)

SERIES	LINE	BODY	ENGINE	TRANSMISSION
L = LOWLINE	T = JEEP - 2WD B = JEEP - 2WD (RHD) J = JEEP - 4WD U = JEEP - 4WD (RHD)	72 = SPORT UTILITY 2-DR 74 = SPORT UTILITY 4-DR	ENC = 2.5L 4 Cyl Turbo Diesel Engine EPB = 2.5L 4 Cylinder Engine EPE = Engine - 2.5L Power Tech I-4 Cyl. ERH = 4.0L Power Tech I-6 Engine	DDQ = 5-Speed Manual Transmission DGS = 4-Speed Automatic AW4 Transmission DGO = ALL AUTOMATIC TRANSMISSIONS DBB = ALL MANUAL TRANSMISSIONS

Case and Extension AX5 (DDQ)
Figure AX-210

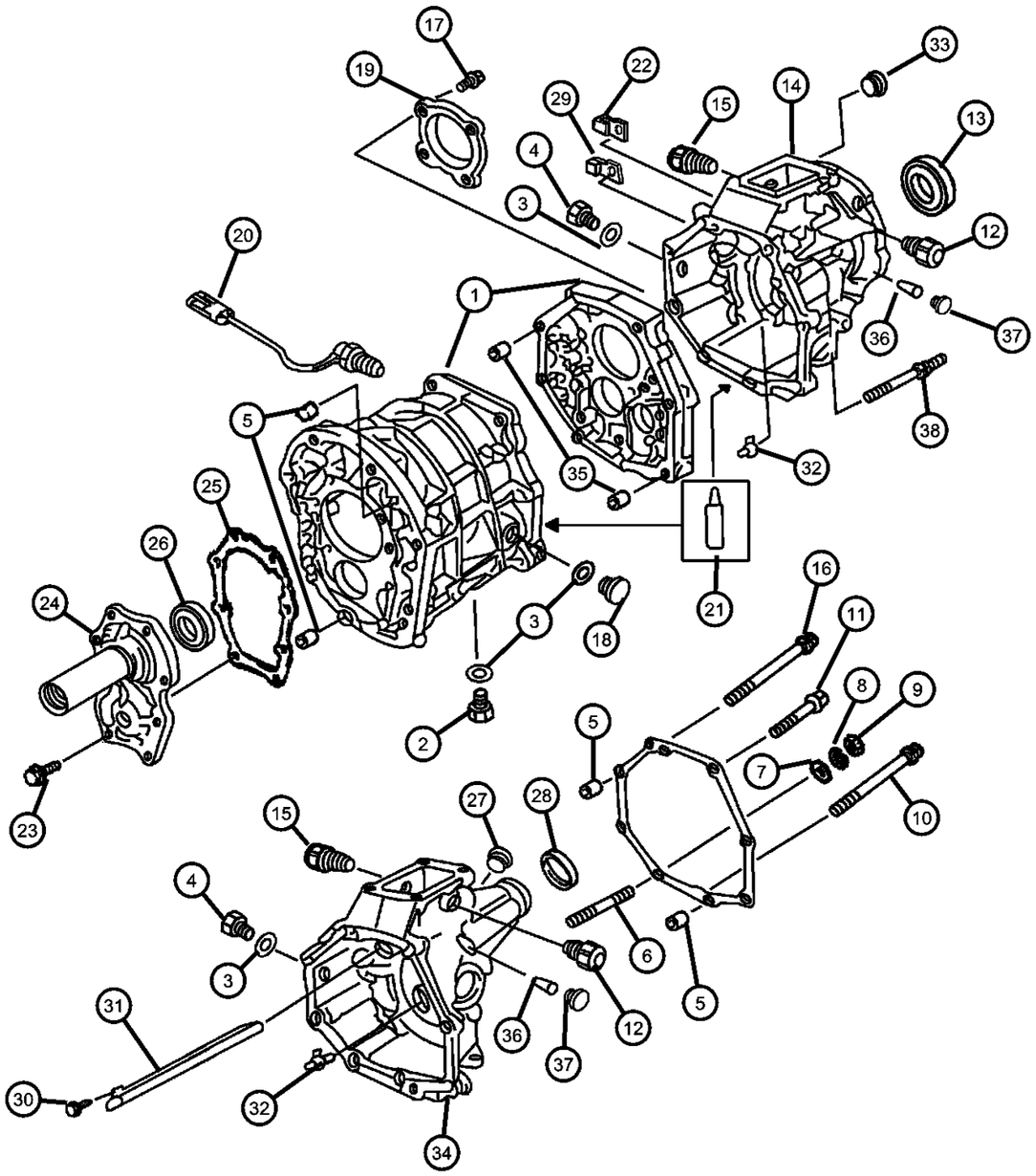

ITEM	PART NUMBER	QTY	LINE	SERIES	BODY	ENGINE	TRANS	TRIM	DESCRIPTION
16									BOLT
	83503549	5	B, T			EP0	DDQ		52107746
		5	J, U			EP0	DDQ		52107747
		5	B, T			EP0	DDQ		52104546
		5	J, U			EP0	DDQ		52104547
17									SCREW, Manual Transmission
	83500511	4	B, T			EP0	DDQ		52107746
		4	J, U			EP0	DDQ		52107747
		4	B, T			EP0	DDQ		52104546
		4	J, U			EP0	DDQ		52104547
18									PLUG, Oil Fill
	83500623	1	B, T			EP0	DDQ		52107746
		1	J, U			EP0	DDQ		52107747
		1	B, T			EP0	DDQ		52104546
		1	J, U			EP0	DDQ		52104547
19									RETAINER, Bearing
	83506034	1	B, T			EP0	DDQ		52107746
		1	J, U			EP0	DDQ		52107747
		1	B, T			EP0	DDQ		52104546
		1	J, U			EP0	DDQ		52104547
20									SWITCH, Back Up Lamp
	83500629	1	B, T			EP0	DDQ		52107746
		1	J, U			EP0	DDQ		52107747
		1	B, T			EP0	DDQ		52104546
		1	J, U			EP0	DDQ		52104547
21	04318025	1	B, T			EP0	DDQ		SEALANT, RTV
22									CLAMP, Transmission
	83503551	1	B, T			EP0	DDQ		52107746
		1	J, U			EP0	DDQ		52107747
		1	B, T			EP0	DDQ		52104546
		1	J, U			EP0	DDQ		52104547
23									SCREW, Hex Head, M8x1.25x25
	34201818	8	B, T			EP0	DDQ		52107746

CHEROKEE (XJ)

SERIES	LINE	BODY	ENGINE	TRANSMISSION
L = LOWLINE	T = JEEP - 2WD B = JEEP - 2WD (RHD) J = JEEP - 4WD U = JEEP - 4WD (RHD)	72 = SPORT UTILITY 2-DR 74 = SPORT UTILITY 4-DR	ENC = 2.5L 4 Cyl Turbo Diesel Engine EPB = 2.5L 4 Cylinder Engine EPE = Engine - 2.5L Power Tech I-4 Cyl. ERH = 4.0L Power Tech I-6 Engine	DDQ = 5-Speed Manual Transmission DGS = 4-Speed Automatic AW4 Transmission DGO = ALL AUTOMATIC TRANSMISSIONS DBB = ALL MANUAL TRANSMISSIONS

Case and Extension AX5 (DDQ)
Figure AX-210

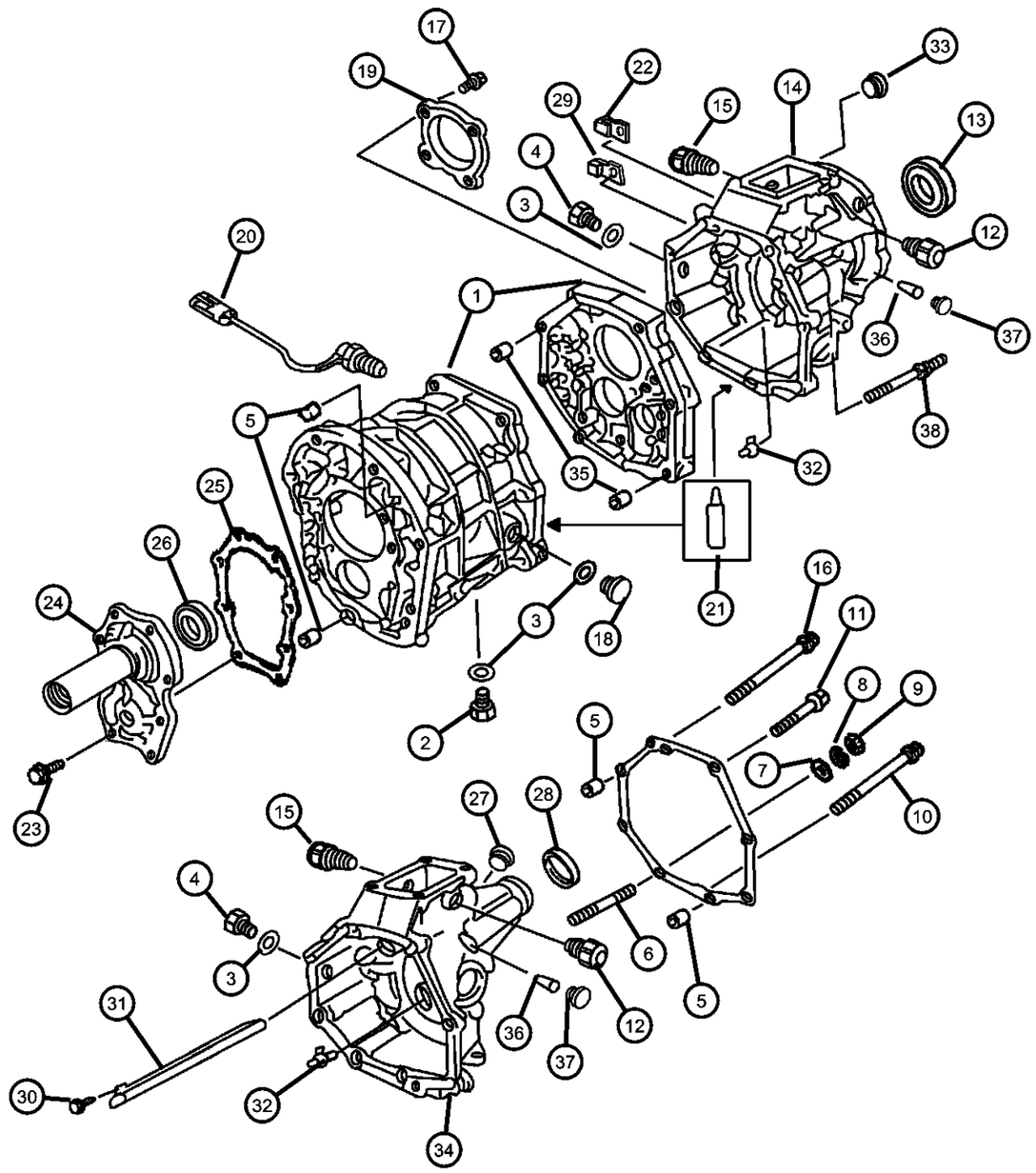

ITEM	PART NUMBER	QTY	LINE	SERIES	BODY	ENGINE	TRANS	TRIM	DESCRIPTION
		8	J, U			EP0	DDQ		52107747
		8	B, T			EP0	DDQ		52104546
		8	J, U			EP0	DDQ		52104547
24									RETAINER, Bearing
	04746025	1	J, U			EP0	DDQ		52107747
		1	J, U			EP0	DDQ		52104547
	83506034	1	B, T			EP0	DDQ		52107746
		1	B, T			EP0	DDQ		52104546
25									GASKET, Input Gear Retainer
	83500505	1	B, T			EP0	DDQ		52107746
		1	J, U			EP0	DDQ		52107747
		1	B, T			EP0	DDQ		52104546
		1	J, U			EP0	DDQ		52104547
26									SEAL, Main Shaft
	83506045	1	B, T			EP0	DDQ		52107746
		1	J, U			EP0	DDQ		52107747
		1	B, T			EP0	DDQ		52104546
		1	J, U			EP0	DDQ		52104547
27									PLUG, Extension Housing
	83502124	1	B, T			EP0	DDQ		52107746
		1	B, T			EP0	DDQ		52104546
28									SEAL, Extension
	83502118	1	B, T			EP0	DDQ		52107746
		1	B, T			EP0	DDQ		52104546
29									CLAMP, Transmission
	83500631	1	B, T			EP0	DDQ		52104546
		1	J, U			EP0	DDQ		52104547
		1	J, U			EP0	DDQ		52107747
		1	B, T			EP0	DDQ		52107746
30	83502126	1	B, T			ER0	DDQ		BOLT, Oil Receiver Pipe
31	83502122	1	B, T			EP0	DDQ		PIPE, Oil Receiver
32									PIPE, Oil Receiver
	83500646	1	J, U			EN0	DDQ		

CHEROKEE (XJ)

SERIES	LINE	BODY	ENGINE	TRANSMISSION
L = LOWLINE	T = JEEP - 2WD B = JEEP - 2WD (RHD) J = JEEP - 4WD U = JEEP - 4WD (RHD)	72 = SPORT UTILITY 2-DR 74 = SPORT UTILITY 4-DR	ENC = 2.5L 4 Cyl Turbo Diesel Engine EPB = 2.5L 4 Cylinder Engine EPE = Engine - 2.5L Power Tech I-4 Cyl. ERH = 4.0L Power Tech I-6 Engine	DDQ = 5-Speed Manual Transmission DGS = 4-Speed Automatic AW4 Transmission DGO = ALL AUTOMATIC TRANSMISSIONS DBB = ALL MANUAL TRANSMISSIONS

Case and Extension AX5 (DDQ)
Figure AX-210

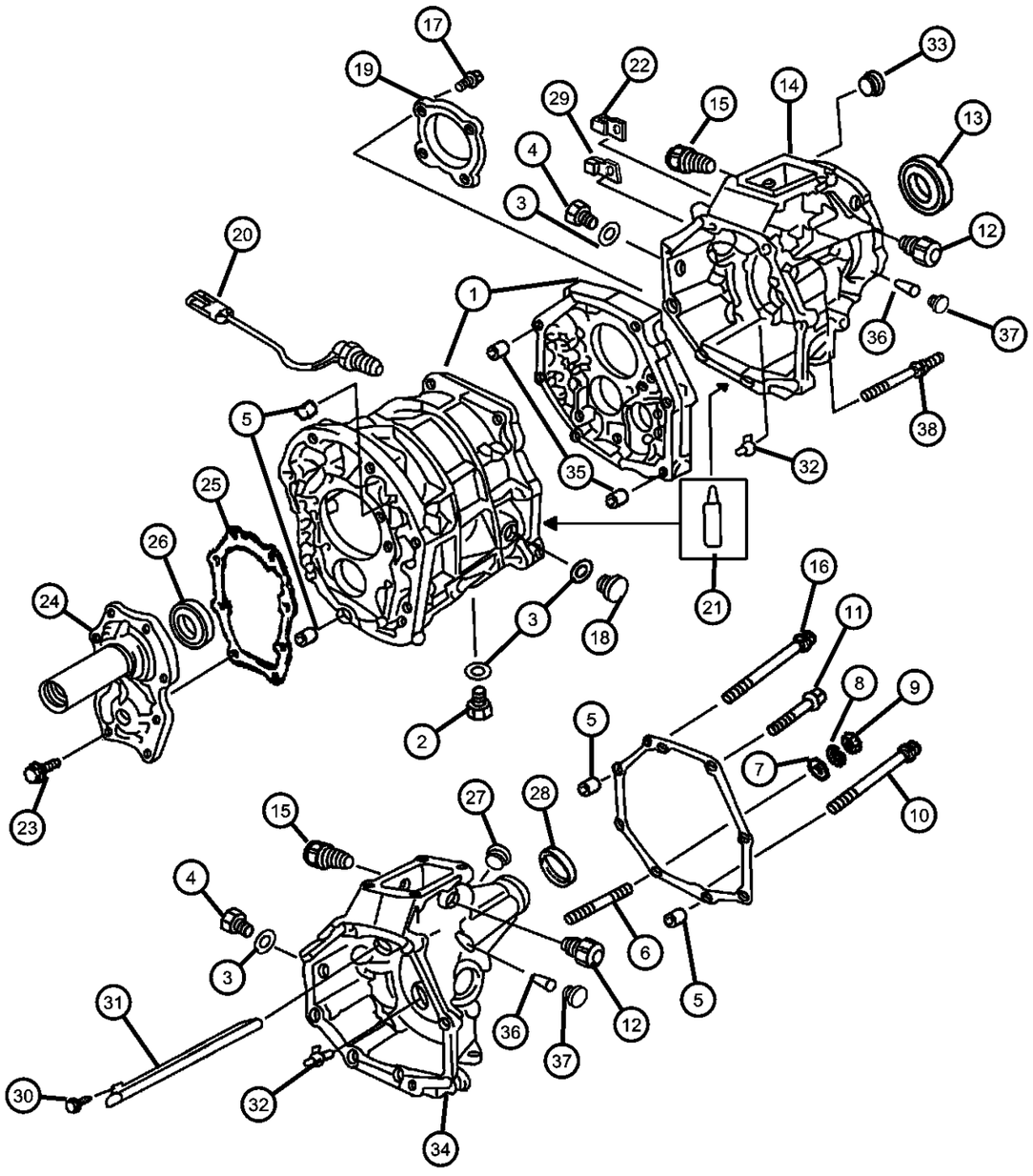

ITEM	PART NUMBER	QTY	LINE	SERIES	BODY	ENGINE	TRANS	TRIM	DESCRIPTION
		1	J			ER0	DDQ		
		1	B, T			EP0	DDQ		
33									CAP, Detent
	83503109	AR	J, U			EP0	DDQ		52107747
		AR	B, T			EP0	DDQ		52107746
		AR	B, T			EP0	DDQ		52104546
34	83506013	1	B, T			EP0	DDQ		HOUSING, Transmission Rear Extension
35									PIN, Locating
	05003663AA	2	B, T			EP0	DDQ		
		2	J, U			EP0	DDQ		
		4	B, T			ER0	DDQ		
		4	J, U			ER0	DDQ		
		4	J, U			EN0	DDQ		
36									PIN, Shift Shaft
	83500540	3	B, T			ER0	DDQ		
		3	J, U			EN0	DDQ		
		2	J, U			ER0	DDQ		
37									PLUG, Transmission
	83500524	AR	B, T			ER0	DDQ		
		AR	J, U			EN0	DDQ		
		AR	J, U			ER0	DDQ		
		AR	B, T			ER0			
		AR	J, U			EN0			
		AR	J, U			ER0			
38	83500972	1	J, U			ER0	DDQ		STUD, Hex Shoulder, M10x1.25x105

CHEROKEE (XJ)

SERIES	LINE	BODY	ENGINE	TRANSMISSION
L = LOWLINE	T = JEEP - 2WD B = JEEP - 2WD (RHD) J = JEEP - 4WD U = JEEP - 4WD (RHD)	72 = SPORT UTILITY 2-DR 74 = SPORT UTILITY 4-DR	ENC = 2.5L 4 Cyl Turbo Diesel Engine EPB = 2.5L 4 Cylinder Engine EPE = Engine - 2.5L Power Tech I-4 Cyl. ERH = 4.0L Power Tech I-6 Engine	DDQ = 5-Speed Manual Transmission DGS = 4-Speed Automatic AW4 Transmission DGO = ALL AUTOMATIC TRANSMISSIONS DBB = ALL MANUAL TRANSMISSIONS

Case and Related Parts AX 15 (DDQ)
Figure AX-215

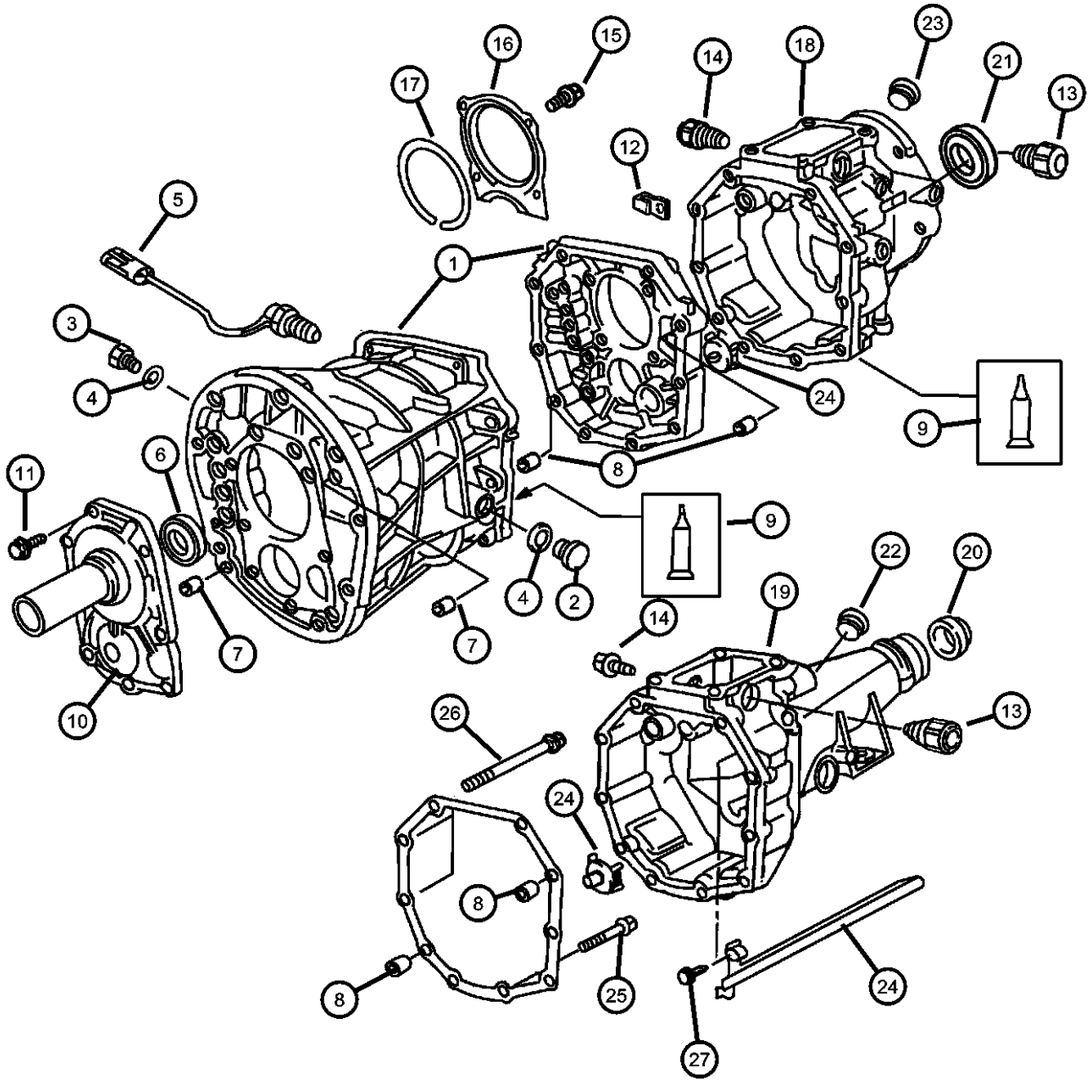

ITEM	PART NUMBER	QTY	LINE	SERIES	BODY	ENGINE	TRANS	TRIM	DESCRIPTION

Notes:
DGS = Aisin Warner 4 Speed Automatic Transmission
DDQ = 5 Speed Manual Transmission
ER0 = All 4.0L 6 Cylinder Gas Engines
ENC = 2.5L 4 Cylinder Turbo Diesel Engine

1									CASE, Transmission
	05252034	1	B, T			ER0	DDQ		52107749
		1	J, U			EN0	DDQ		52107752
		1	J, U			ER0	DDQ		52108047
		1	J, U			ER0	DDQ		52108047AB
		1	B, T			ER0	DDQ		52108048AB
		1	J, U			EN0	DDQ		52108121AB
2									PLUG, Oil Fill
	83500623	1	J, U			EN0	DDQ		52107752
		1	J, U			ER0	DDQ		52108047
		1	J, U			ER0	DDQ		52108047AB
		1	B, T			ER0	DDQ		52108048AB
		1	J, U			EN0	DDQ		52108121AB
3									PLUG, Differential Drain
	04543303	1	B, T			ER0	DDQ		52107749
		1	J, U			EN0	DDQ		52107752
		1	J, U			EP0	DDQ		52107747
		1	J, U			ER0	DDQ		52108047AB
		1	B, T			ER0	DDQ		52108048AB
		1	J, U			EN0	DDQ		52108121AB
4									GASKET, Drain Plug
	83500513	2	B, T			ER0	DDQ		52107749
		2	J, U			EN0	DDQ		52107752
		2	J, U			ER0	DDQ		
		2	J, U			ER0	DDQ		52108047AB
		2	B, T			ER0			52108048AB
		2	J, U			EN0	DDQ		52108121AB
5									SWITCH, Back Up Lamp
	83500629	1	B, T			ER0	DDQ		52107749

CHEROKEE (XJ)

SERIES	LINE	BODY	ENGINE	TRANSMISSION
L = LOWLINE	T = JEEP - 2WD B = JEEP - 2WD (RHD) J = JEEP - 4WD U = JEEP - 4WD (RHD)	72 = SPORT UTILITY 2-DR 74 = SPORT UTILITY 4-DR	ENC = 2.5L 4 Cyl Turbo Diesel Engine EPB = 2.5L 4 Cylinder Engine EPE = Engine - 2.5L Power Tech I-4 Cyl. ERH = 4.0L Power Tech I-6 Engine	DDQ = 5-Speed Manual Transmission DGS = 4-Speed Automatic AW4 Transmission DGO = ALL AUTOMATIC TRANSMISSIONS DBB = ALL MANUAL TRANSMISSIONS

Case and Related Parts AX 15 (DDQ)
Figure AX-215

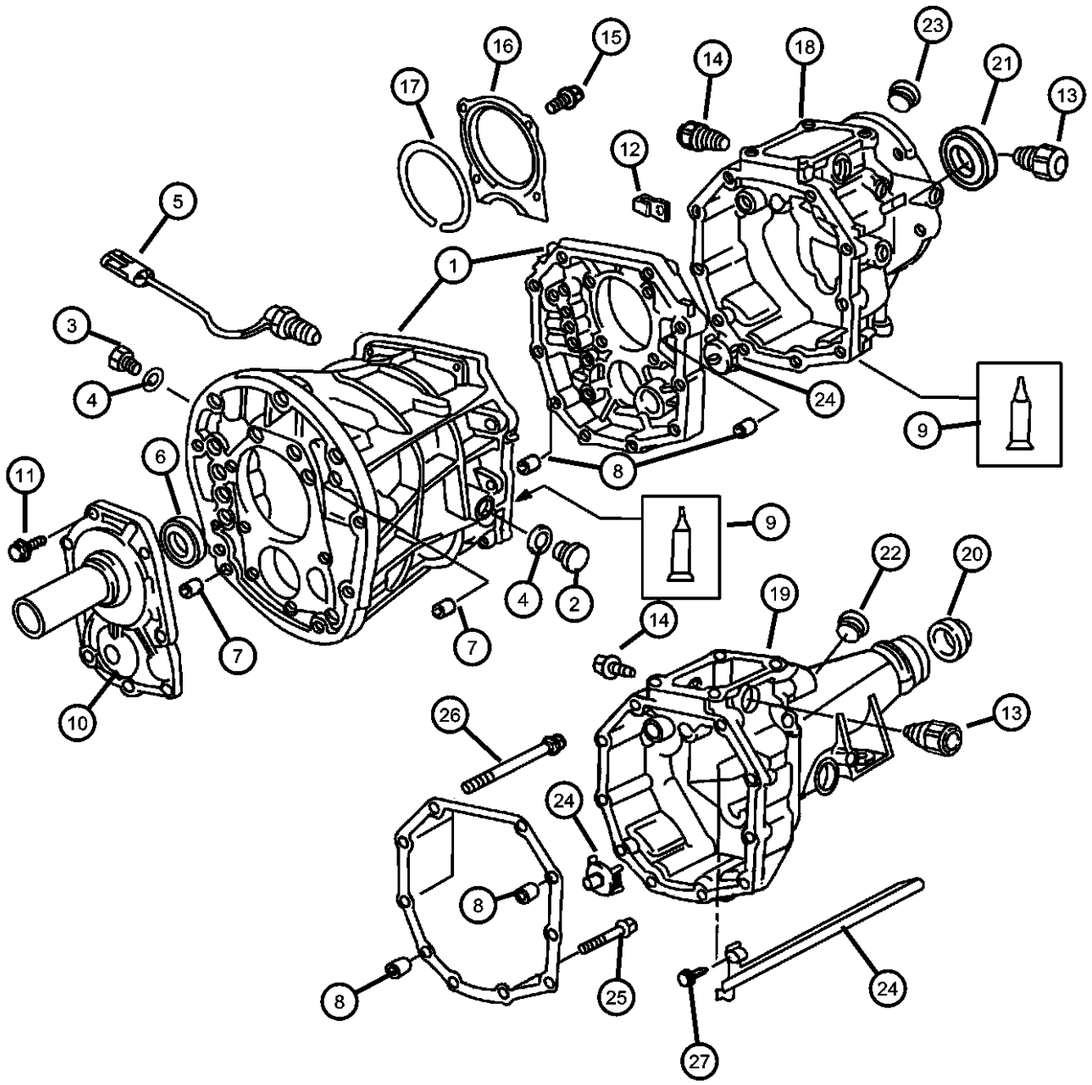

ITEM	PART NUMBER	QTY	LINE	SERIES	BODY	ENGINE	TRANS	TRIM	DESCRIPTION
		1	J, U			EN0	DDQ		52107752
		1	J, U			ER0	DDQ		52108047
		1	J, U			ER0	DDQ		52108047AB
		1	B, T			ER0	DDQ		52108048AB
		1	J, U			EN0	DDQ		52108121AB
6									SEAL, Front Retainer
	05252053	1	B, T			ER0	DDQ		52107749
		1	J, U			EN0	DDQ		52107752
		1	J, U			ER0	DDQ		52108047
		1	J, U			ER0	DDQ		52108047AB
		1	B, T			ER0	DDQ		52108048AB
		1	J, U			EN0	DDQ		52108121AB
7									PIN, Shift Shaft
	83500540	3	B, T			ER0	DDQ		52107749
		3	J, U			EN0	DDQ		52107752
		1	J, U			ER0	DDQ		52108047
8									PIN, Locating
	83500504	2	B, T			ER0	DDQ		52107749
		2	J, U			EN0	DDQ		52107752
		2	J			ER0	DDQ		52108047
		2	J, U			ER0	DDQ		52108047AB
		2	B, T			ER0			52108048AB
		2	J, U			EN0	DDQ		52108121AB
9	83504038	1	B			ER0	DGS		SEALANT, RTV
10									RETAINER, Bearing
	04636382	1	J, U			ER0	DDQ		With Transmission (05108047)
		1	J, U			ER0	DDQ		With Transmission (52108047AB)
		1	B, T			ER0	DDQ		With Transmission (52108048AB)
		1	J, U			EN0	DDQ		With Transmission (52108121AB)
11									SCREW, Hex Head, M8x1.25x25
	34201818	8	J, U			EN0			52107752

CHEROKEE (XJ)

SERIES	LINE	BODY	ENGINE	TRANSMISSION
L = LOWLINE	T = JEEP - 2WD B = JEEP - 2WD (RHD) J = JEEP - 4WD U = JEEP - 4WD (RHD)	72 = SPORT UTILITY 2-DR 74 = SPORT UTILITY 4-DR	ENC = 2.5L 4 Cyl Turbo Diesel Engine EPB = 2.5L 4 Cylinder Engine EPE = Engine - 2.5L Power Tech I-4 Cyl. ERH = 4.0L Power Tech I-6 Engine	DDQ = 5-Speed Manual Transmission DGS = 4-Speed Automatic AW4 Transmission DGO = ALL AUTOMATIC TRANSMISSIONS DBB = ALL MANUAL TRANSMISSIONS

Case and Related Parts AX 15 (DDQ)
Figure AX-215

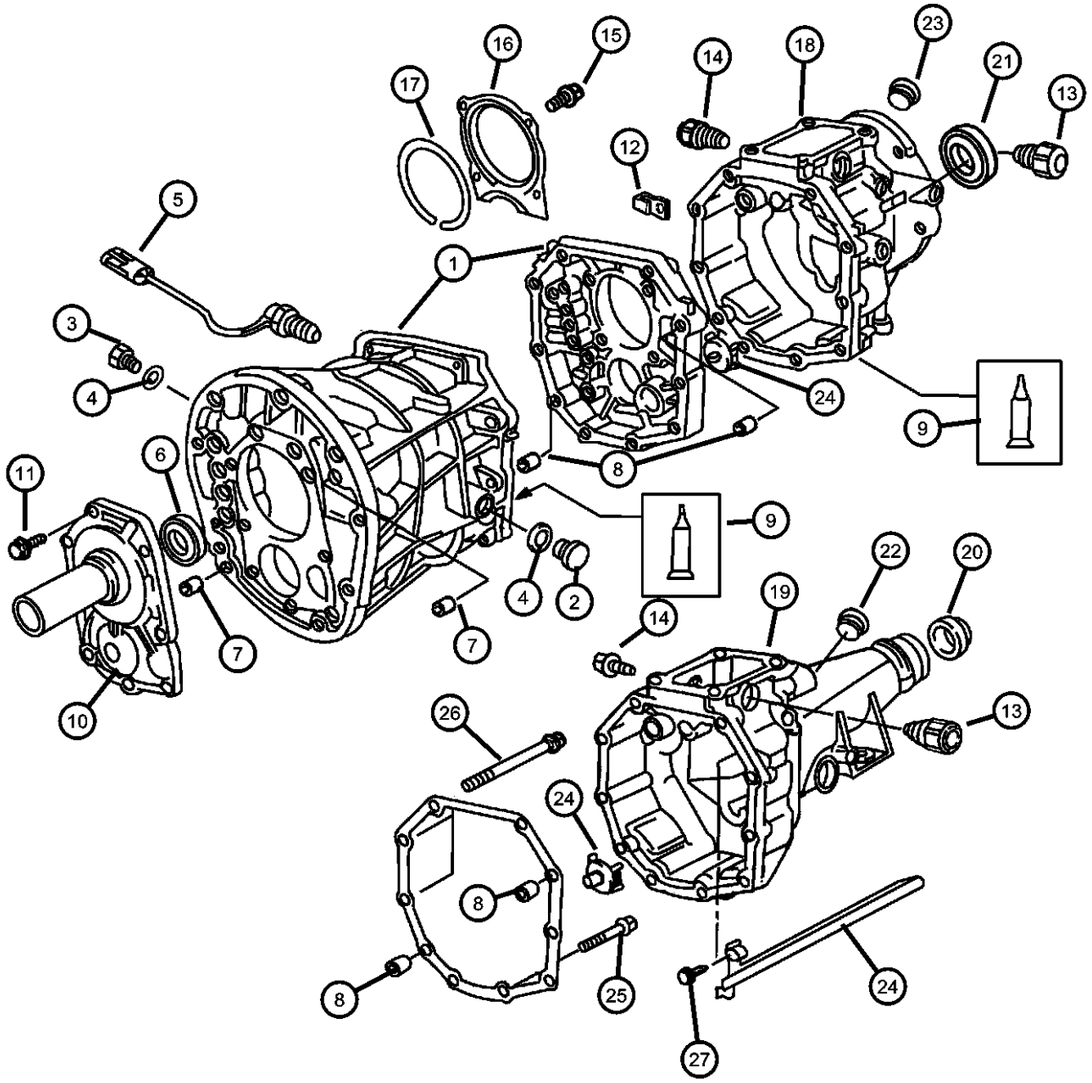

ITEM	PART NUMBER	QTY	LINE	SERIES	BODY	ENGINE	TRANS	TRIM	DESCRIPTION
		8	B, T			ER0			52107749
		1	J, U			ER0	DDQ		52108047
		8	J, U			ER0	DDQ		52108047AB
		8	B, T			ER0			52108048AB
		8	J, U			EN0	DDQ		52108121AB
12	83500631	1	J, U			ER0	DDQ		CLAMP, Transmission
13									PIN, Reverse Restrict
	83500516	1	B, T			ER0	DDQ		52107749
		1	J, U			ER0	DDQ		52108047
		1	J, U			ER0	DDQ		52108047AB
		1	B, T			ER0	DDQ		52108048AB
		1	J, U			EN0	DDQ		52108121AB
14									PIN, Reverse
	05252039	1	B, T			ER0	DDQ		52107749
		1	J, U			EN0	DDQ		52107752
		1	J, U			ER0	DDQ		52108047
		1	J, U			ER0	DDQ		52108047AB
		1	B, T			ER0	DDQ		52108048AB
		1	J, U			EN0	DDQ		52108121AB
15									BOLT AND LOCK WASHER, Hex Head, M8x1.25x20
	83502124	1	B, T			ER0	DDQ		52107749
		1	B, T			ER0	DDQ		52108048AB
16									RETAINER, Output Shaft Rear Bearing
	05252036	1	B, T			ER0	DDQ		52107749
		1	J, U			EN0	DDQ		52107752
		1	J, U			ER0	DDQ		52108047
		1	J, U			ER0	DDQ		52108047AB
		1	B, T			ER0	DDQ		52108048AB
		1	J, U			EN0	DDQ		52108121AB
17									SNAP RING
	83506221	1	B, T			ER0	DDQ		52107749
		1	J, U			EN0	DDQ		52107752

CHEROKEE (XJ)

SERIES	LINE	BODY	ENGINE	TRANSMISSION
L = LOWLINE	T = JEEP - 2WD B = JEEP - 2WD (RHD) J = JEEP - 4WD U = JEEP - 4WD (RHD)	72 = SPORT UTILITY 2-DR 74 = SPORT UTILITY 4-DR	ENC = 2.5L 4 Cyl Turbo Diesel Engine EPB = 2.5L 4 Cylinder Engine EPE = Engine - 2.5L Power Tech I-4 Cyl. ERH = 4.0L Power Tech I-6 Engine	DDQ = 5-Speed Manual Transmission DGS = 4-Speed Automatic AW4 Transmission DGO = ALL AUTOMATIC TRANSMISSIONS DBB = ALL MANUAL TRANSMISSIONS

Case and Related Parts AX 15 (DDQ)
Figure AX-215

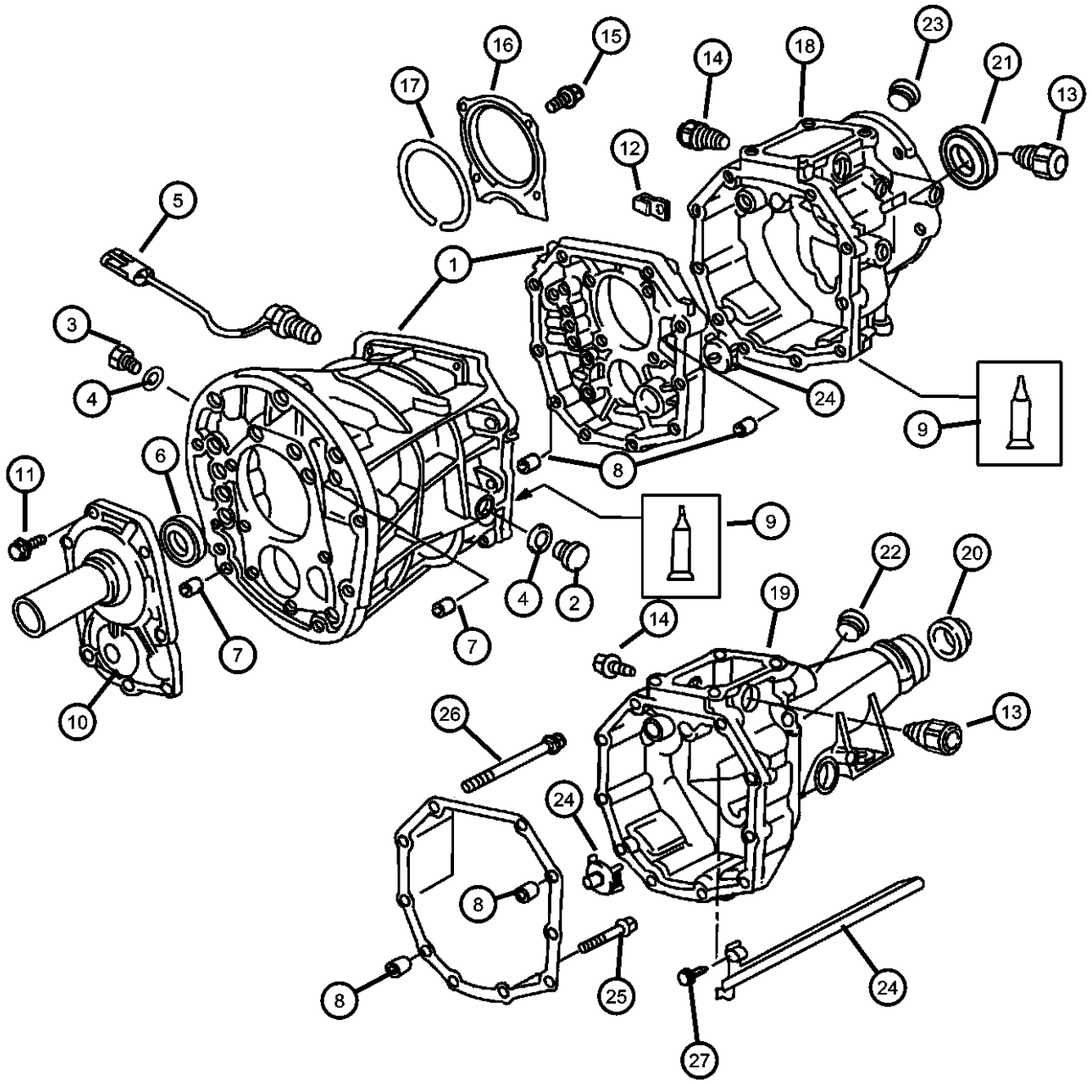

ITEM	PART NUMBER	QTY	LINE	SERIES	BODY	ENGINE	TRANS	TRIM	DESCRIPTION
		1	J, U			ER0	DDQ		52108047
		1	J, U			ER0	DDQ		52108047AB
		1	B, T			ER0	DDQ		52108048AB
		1	J, U			EN0	DDQ		52108121AB
18									ADAPTER, Transfer Case
	04636372	1	J, U			EN0	DDQ		52107752
		1	J, U			ER0	DDQ		52108047
		1	J, U			ER0	DDQ		52108047AB
		1	J, U			EN0	DDQ		52108121AB
19									CASE, Transmission Rear
	83506225	1	B, T			ER0	DDQ		52107749
		1	B, T			ER0	DDQ		52108048AB
20									SEAL, Extension
	83502118	1	B, T			ER0	DDQ		52107749
		1	B, T			ER0	DDQ		52108048AB
21									SEAL, Adapter
	83503108	1	J, U			EN0	DDQ		52107752
		1	J, U			ER0	DDQ		52108047
		1	J, U			ER0	DDQ		52108047AB
		1	J, U			EN0	DDQ		52108121AB
22									PLUG, Extension Housing
	83502124	1	B, T			ER0	DDQ		52107749
		1	J, U			ER0	DDQ		52108047
		1	B, T			ER0	DDQ		52108048ab
23									CAP, Detent
	83503109	AR	B, T			ER0	DDQ		52107749
		AR	J, U			EN0	DDQ		52107752
		AR	J, U			ER0	DDQ		52108047
24									PIPE, Oil Receiver
	83500646	1	B, T			ER0	DDQ		52107749
		1	J, U			EN0	DDQ		52107752
		1	J, U			ER0	DDQ		52108047
		1	J, U			ER0	DDQ		52108047ab

CHEROKEE (XJ)

SERIES	LINE	BODY	ENGINE	TRANSMISSION
L = LOWLINE	T = JEEP - 2WD B = JEEP - 2WD (RHD) J = JEEP - 4WD U = JEEP - 4WD (RHD)	72 = SPORT UTILITY 2-DR 74 = SPORT UTILITY 4-DR	ENC = 2.5L 4 Cyl Turbo Diesel Engine EPB = 2.5L 4 Cylinder Engine EPE = Engine - 2.5L Power Tech I-4 Cyl. ERH = 4.0L Power Tech I-6 Engine	DDQ = 5-Speed Manual Transmission DGS = 4-Speed Automatic AW4 Transmission DGO = ALL AUTOMATIC TRANSMISSIONS DBB = ALL MANUAL TRANSMISSIONS

AR = use ase required - = Non illustrrated part

Case and Related Parts AX 15 (DDQ)
Figure AX-215

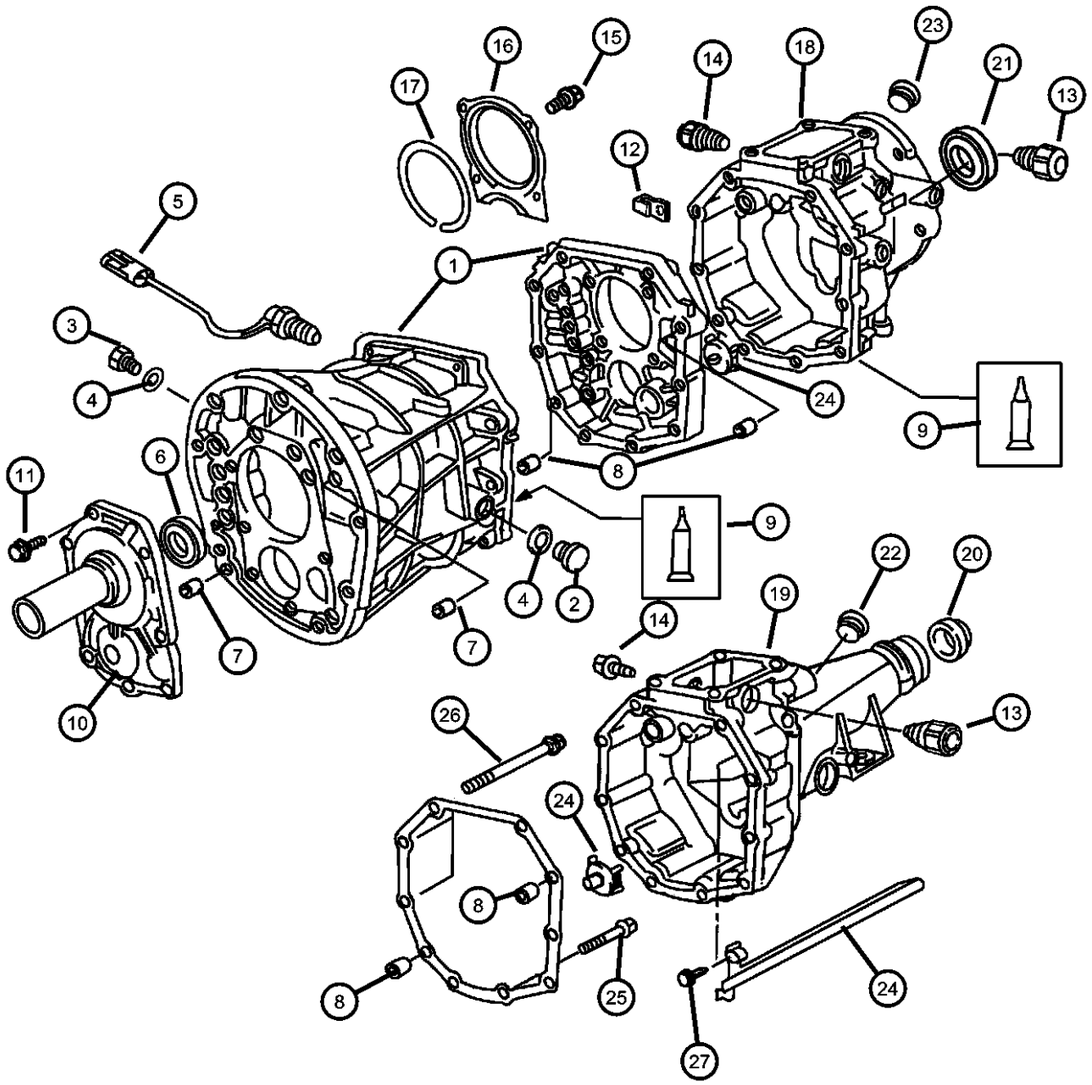

ITEM	PART NUMBER	QTY	LINE	SERIES	BODY	ENGINE	TRANS	TRIM	DESCRIPTION
		1	B, T			ER0	DDQ		52108048ab
		1	J, U			EN0	DDQ		52108121ab
25									BOLT, Transmission Case
	04746274	8	B, T			ER0	DDQ		52107749
		8	J, U			EN0	DDQ		52107752
		8	J, U			ER0	DDQ		52108047
		8	J, U			ER0	DDQ		52108047AB
		8	B, T			ER0			52108048AB
		8	J, U			EN0	DDQ		52108121AB
26									BOLT
	83503548	2	B, T			ER0	DDQ		52107749
		2	J, U			EN0	DDQ		52107752
		2	J, U			ER0	DDQ		52108047
		2	J, U			ER0	DDQ		52108047AB
		2	B, T			ER0	DDQ		52108048AB
		2	J, U			EN0			52108121AB
27									BOLT, Oil Receiver Pipe
	04897134AA	1	B, T			ER0	DDQ		52107749
		1	B, T			ER0	DDQ		52108048ab

CHEROKEE (XJ)

SERIES	LINE	BODY	ENGINE	TRANSMISSION
L = LOWLINE	T = JEEP - 2WD B = JEEP - 2WD (RHD) J = JEEP - 4WD U = JEEP - 4WD (RHD)	72 = SPORT UTILITY 2-DR 74 = SPORT UTILITY 4-DR	ENC = 2.5L 4 Cyl Turbo Diesel Engine EPB = 2.5L 4 Cylinder Engine EPE = Engine - 2.5L Power Tech I-4 Cyl. ERH = 4.0L Power Tech I-6 Engine	DDQ = 5-Speed Manual Transmission DGS = 4-Speed Automatic AW4 Transmission DGO = ALL AUTOMATIC TRANSMISSIONS DBB = ALL MANUAL TRANSMISSIONS

Gear Train AX 5 (DDQ)
Figure AX-410

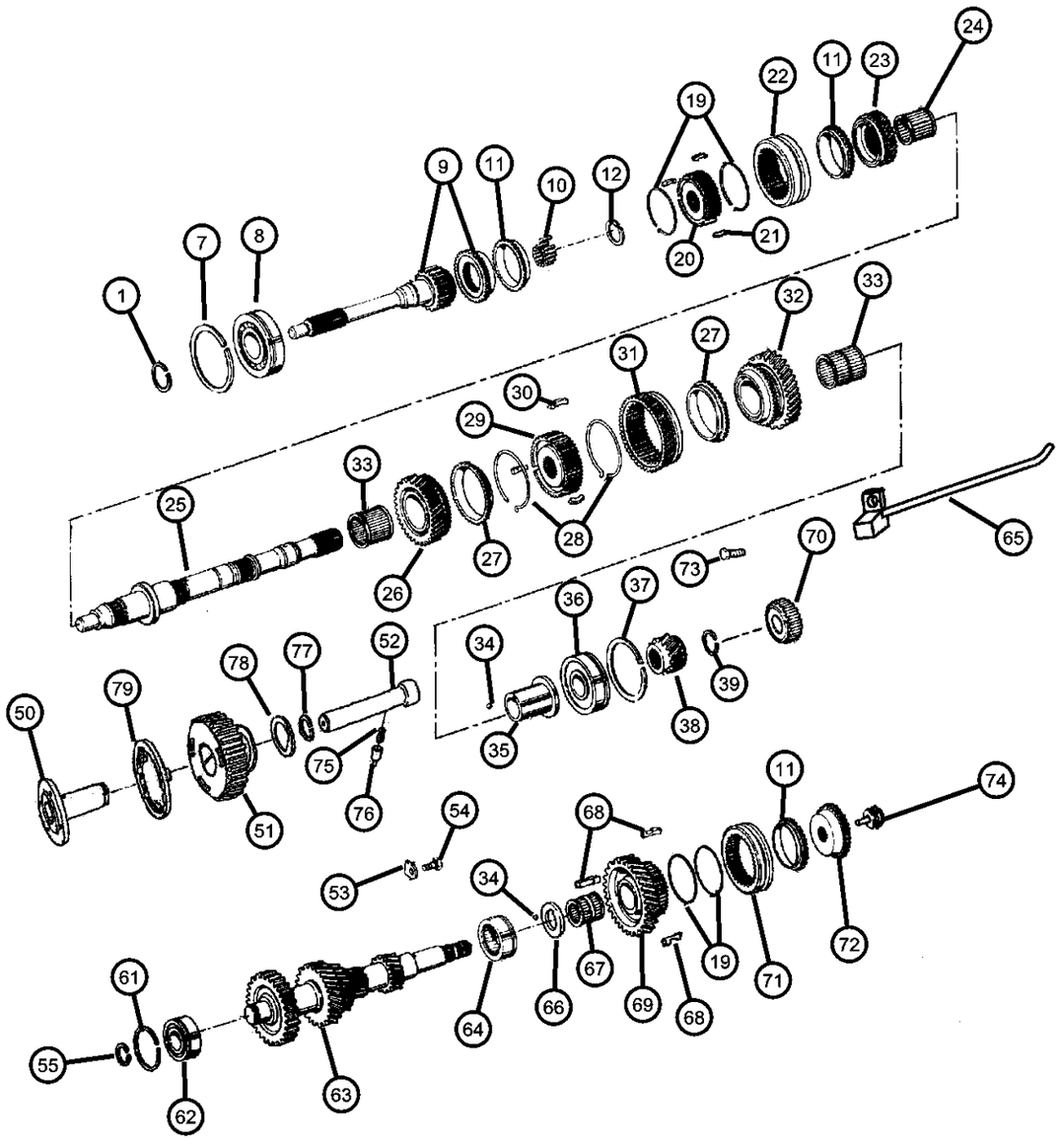

ITEM	PART NUMBER	QTY	LINE	SERIES	BODY	ENGINE	TRANS	TRIM	DESCRIPTION
Notes:									
DDQ = 5 Speed Manual Transmission									
EP0 = All 2.5L Gas Engines									
1									SNAP RING
	83500645	1	B, T			EP0	DDQ		52107746
		1	J, U			EP0	DDQ		52107747
		1	B, T			EP0	DDQ		52104546
		1	J, U			EP0	DDQ		52104547
-2									SNAP RING, Input Shaft, 2.10mm
	83500607	1	B, T			EP0	DDQ		52107756
		1	J, U			EP0	DDQ		52107747
		1	B, T			EP0	DDQ		52104546
		1	J, U			EP0	DDQ		52104547
-3									SNAP RING, Input Shaft, 2.15mm
	83500608	1	B, T			EP0	DDQ		52107746
		1	J, U			EP0	DDQ		52107747
		1	B, T			EP0	DDQ		52104546
		1	J, U			EP0	DDQ		52104547
-4									SNAP RING, Input Shaft, 2.20mm
	83500609	1	B, T			EP0	DDQ		52107746
		1	J, U			EP0	DDQ		52107747
		1	B, T			EP0	DDQ		52104546
		1	J, U			EP0	DDQ		52104547
-5									SNAP RING, Input Shaft, 2.25mm
	83500610	1	B, T			EP0	DDQ		52107746
		1	J, U			EP0	DDQ		52107747
		1	B, T			EP0	DDQ		52104546
		1	J, U			EP0	DDQ		52104547
-6									SNAP RING, Input Shaft, 2.30mm
	83500611	1	B, T			EP0	DDQ		52107746
		1	J, U			EP0	DDQ		52107747
		1	B, T			EP0	DDQ		52104546
		1	J, U			EP0	DDQ		52104547
7									SNAP RING

CHEROKEE (XJ)

SERIES	LINE	BODY	ENGINE	TRANSMISSION
L = LOWLINE	T = JEEP - 2WD B = JEEP - 2WD (RHD) J = JEEP - 4WD U = JEEP - 4WD (RHD)	72 = SPORT UTILITY 2-DR 74 = SPORT UTILITY 4-DR	ENC = 2.5L 4 Cyl Turbo Diesel Engine EPB = 2.5L 4 Cylinder Engine EPE = Engine - 2.5L Power Tech I-4 Cyl. ERH = 4.0L Power Tech I-6 Engine	DDQ = 5-Speed Manual Transmission DGS = 4-Speed Automatic AW4 Transmission DGO = ALL AUTOMATIC TRANSMISSIONS DBB = ALL MANUAL TRANSMISSIONS

Gear Train AX 5 (DDQ)
Figure AX-410

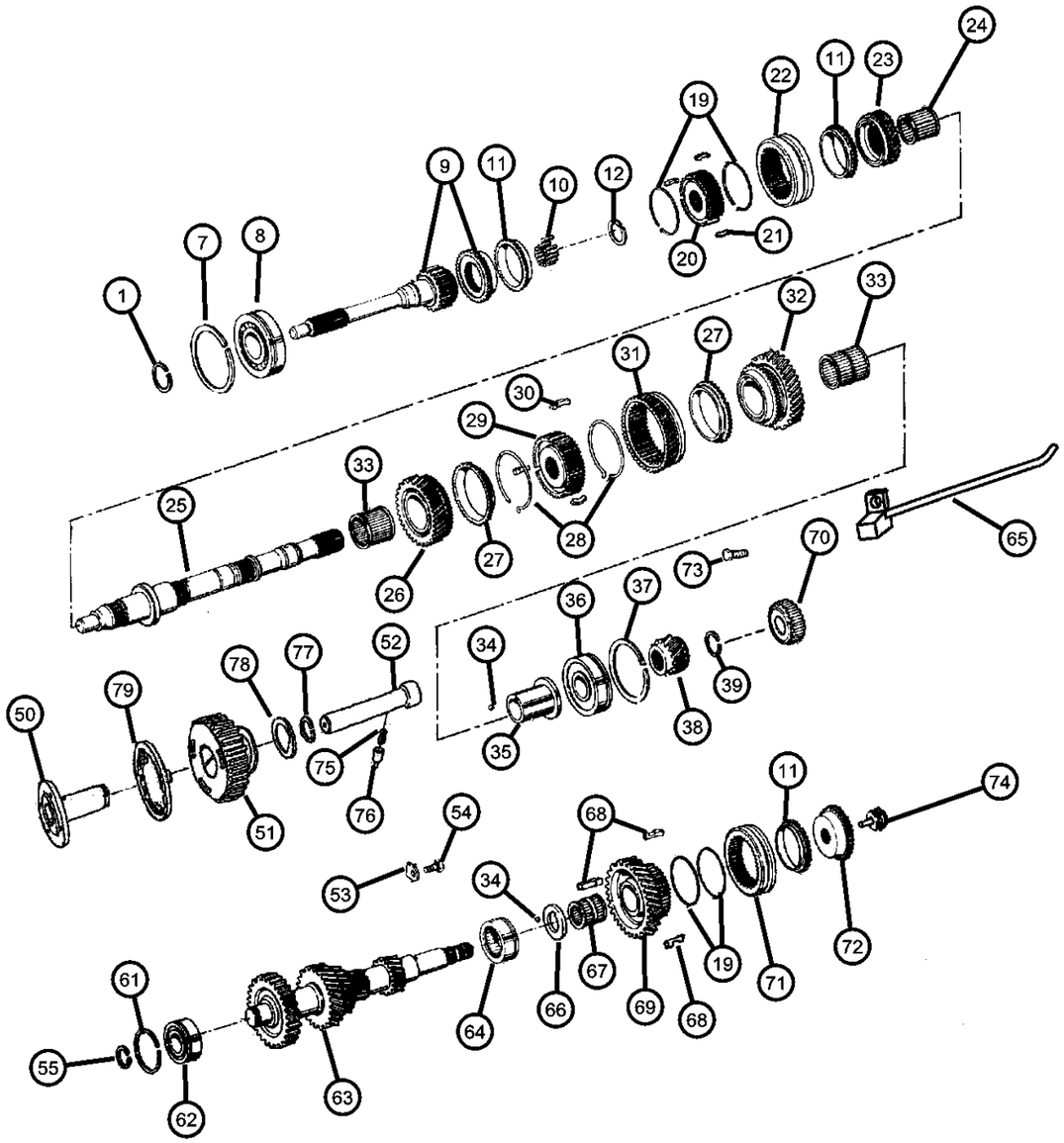

ITEM	PART NUMBER	QTY	LINE	SERIES	BODY	ENGINE	TRANS	TRIM	DESCRIPTION
	83500614	1	J, U			EP0	DDQ		52107747
		1	B, T			EP0	DDQ		52104546
		1	J, U			EP0	DDQ		52104547
8									BEARING, Input Shaft
	83502681	1	B, T			EP0	DDQ		52107746
		1	J, U			EP0	DDQ		52107747
		1	B, T			EP0	DDQ		52104546
9									SHAFT, Input
	83506020	1	J, U			EP0	DDQ		52107747
		1	B, T			EP0	DDQ		52107746
		1	B, T			EP0	DDQ		52104546
		1	J, U			EP0	DDQ		52104547
10									ROLLER, Input Gear
	83502680	13	J, U			EP0	DDQ		52107747
		13	B, T			EP0	DDQ		52107746
		13	B, T			EP0	DDQ		52104546
		13	J, U			EP0	DDQ		52104547
11									STOP RING, Synchronizer
	83500566	2	B, T			EP0	DDQ		52107746
		2	J, U			EP0	DDQ		52107747
		2	B, T			EP0	DDQ		52104546
		2	J, U			EP0	DDQ		52104547
12									SNAP RING, Mainshaft, 1.75mm
	83500598	1	B, T			EP0	DDQ		52107746
		1	J, U			EP0	DDQ		52107747
		1	B, T			EP0	DDQ		52104546
		1	J, U			EP0	DDQ		52104547
-13									SNAP RING, Mainshaft, 1.80mm
	83500599	1	B, T			EP0	DDQ		52107746
		1	J, U			EP0	DDQ		52107747
		1	B, T			EP0	DDQ		52104546
		1	J, U			EP0	DDQ		52104547
-14									SNAP RING, Mainshaft, 1.85mm

CHEROKEE (XJ)

SERIES	LINE	BODY	ENGINE	TRANSMISSION
L = LOWLINE	T = JEEP - 2WD B = JEEP - 2WD (RHD) J = JEEP - 4WD U = JEEP - 4WD (RHD)	72 = SPORT UTILITY 2-DR 74 = SPORT UTILITY 4-DR	ENC = 2.5L 4 Cyl Turbo Diesel Engine EPB = 2.5L 4 Cylinder Engine EPE = Engine - 2.5L Power Tech I-4 Cyl. ERH = 4.0L Power Tech I-6 Engine	DDQ = 5-Speed Manual Transmission DGS = 4-Speed Automatic AW4 Transmission DGO = ALL AUTOMATIC TRANSMISSIONS DBB = ALL MANUAL TRANSMISSIONS

AR = use ase required - = Non illustrrated part

Gear Train AX 5 (DDQ)
Figure AX-410

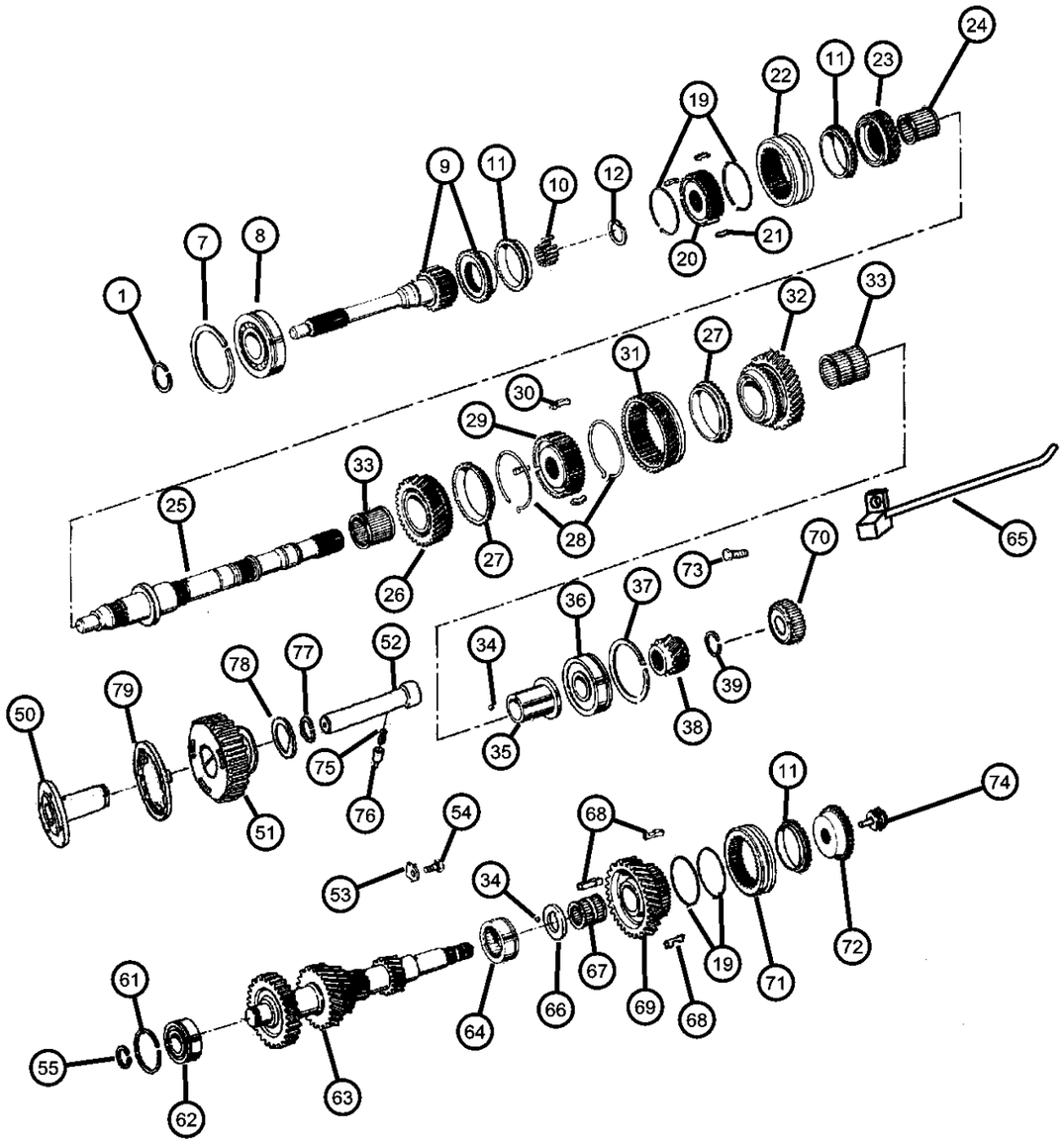

ITEM	PART NUMBER	QTY	LINE	SERIES	BODY	ENGINE	TRANS	TRIM	DESCRIPTION
	83500602	1	B, T			EP0	DDQ		52107746
		1	J, U			EP0	DDQ		52107747
		1	B, T			EP0	DDQ		52104546
		1	J, U			EP0	DDQ		52104547
-15									SNAP RING, Mainshaft, 1.90mm
	83500603	1	B, T			EP0	DDQ		52107746
		1	J, U			EP0	DDQ		52107747
		1	B, T			EP0	DDQ		52104546
		1	J, U			EP0	DDQ		52104547
-16									SNAP RING, Mainshaft, 1.95mm
	83500604	1	B, T			EP0	DDQ		52107746
		1	J, U			EP0	DDQ		52107747
		1	B, T			EP0	DDQ		52104546
		1	J, U			EP0	DDQ		52104547
-17									SNAP RING, Mainshaft, 2.00mm
	83500605	1	B, T			EP0	DDQ		52107746
		1	J, U			EP0	DDQ		52107747
		1	B, T			EP0	DDQ		52104546
		1	J, U			EP0	DDQ		52104547
-18									SNAP RING, Mainshaft, 2.05mm
	83500606	1	B, T			EP0	DDQ		52107746
		1	J, U			EP0	DDQ		52107747
		1	B, T			EP0	DDQ		52104546
		1	J, U			EP0	DDQ		52104547
19									SPRING, Synchronizer Key
	83500568	4	B, T			EP0	DDQ		52107746
		4	J, U			EP0	DDQ		52107747
		4	B, T			EP0	DDQ		52104546
		4	J, U			EP0	DDQ		52104547
20									SYNCHRONIZER, Third and Fourth
	83506027	1	J, U			EP0	DDQ		52107747
		1	B, T			EP0	DDQ		52107746

CHEROKEE (XJ)

SERIES	LINE	BODY	ENGINE	TRANSMISSION
L = LOWLINE	T = JEEP - 2WD B = JEEP - 2WD (RHD) J = JEEP - 4WD U = JEEP - 4WD (RHD)	72 = SPORT UTILITY 2-DR 74 = SPORT UTILITY 4-DR	ENC = 2.5L 4 Cyl Turbo Diesel Engine EPB = 2.5L 4 Cylinder Engine EPE = Engine - 2.5L Power Tech I-4 Cyl. ERH = 4.0L Power Tech I-6 Engine	DDQ = 5-Speed Manual Transmission DGS = 4-Speed Automatic AW4 Transmission DGO = ALL AUTOMATIC TRANSMISSIONS DBB = ALL MANUAL TRANSMISSIONS

Gear Train AX 5 (DDQ)
Figure AX-410

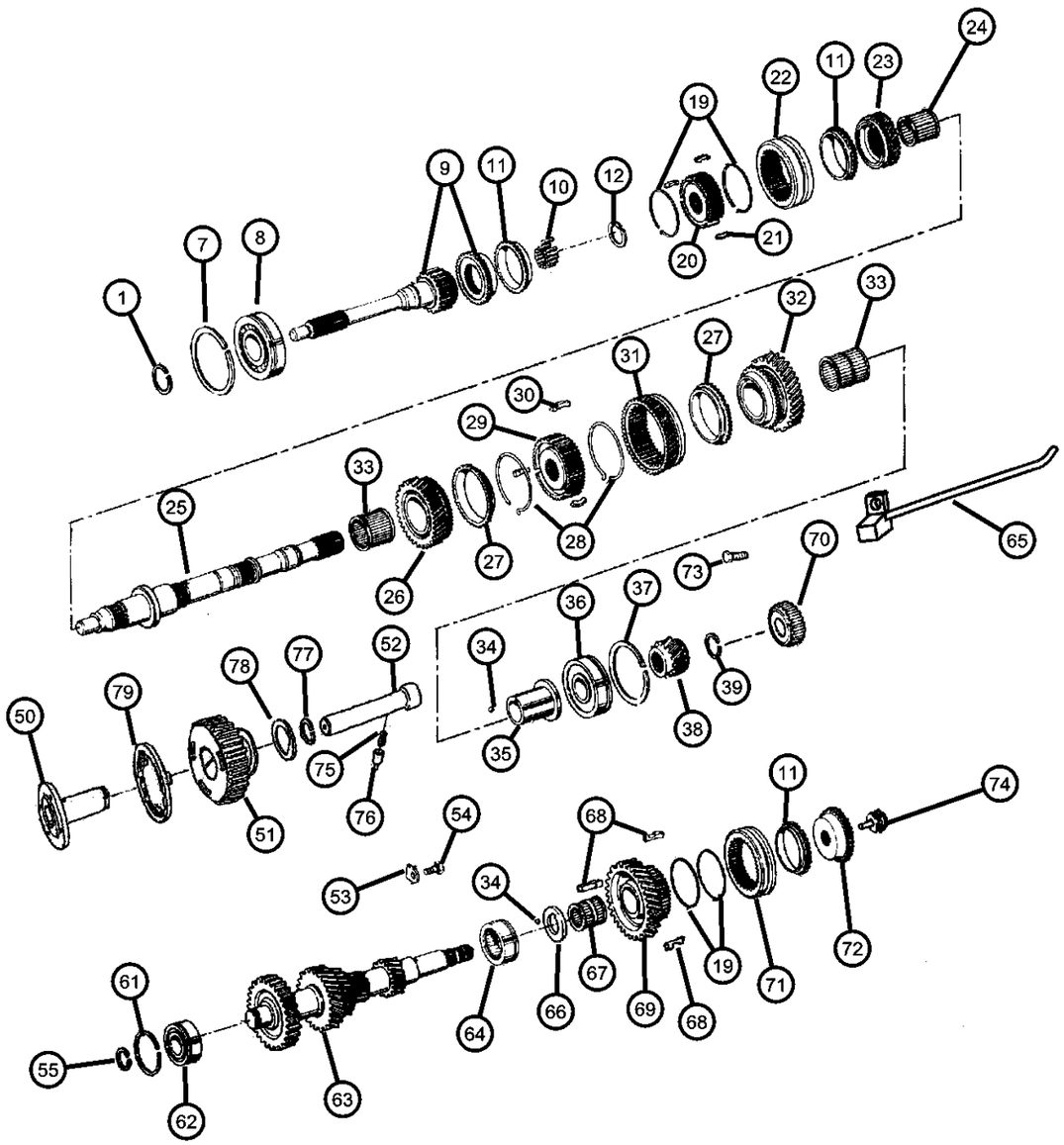

ITEM	PART NUMBER	QTY	LINE	SERIES	BODY	ENGINE	TRANS	TRIM	DESCRIPTION
		1	B, T			EP0	DDQ		52104546
		1	J, U			EP0	DDQ		52104547
21									KEY, Synchronizer
	83506029	3	J, U			EP0	DDQ		52107747
		3	B, T			EP0	DDQ		52107746
		3	B, T			EP0	DDQ		52104546
		3	J, U			EP0			52104547
22									SLEEVE, Synchromesh Clutch Gear
	04740235	1	J, U			EP0	DDQ		52107747
		1	B, T			EP0	DDQ		52107746
		1	B, T			EP0	DDQ		52104546
		1	J, U			EP0	DDQ		52104547
23									GEAR, Third
	83506019	1	B, T			EP0	DDQ		52107746
		1	J, U			EP0	DDQ		52107747
		1	B, T			EP0	DDQ		52104546
		1	J, U			EP0	DDQ		52104547
24									BEARING, Third Gear
	83500576	1	B, T			EP0	DDQ		52107746
		1	J, U			EP0	DDQ		52107747
		1	B, T			EP0	DDQ		52104546
		1	J, U			EP0	DDQ		52104547
25									MAINSHAFT, Transmission
	83502117	1	B, T			EP0	DDQ		52107746
		1	B, T			EP0	DDQ		52104546
	83503105	1	J, U			EP0	DDQ		52107747
		1	J, U			EP0	DDQ		52104547
26									GEAR, Second
	83506018	1	J, U			EP0	DDQ		52107747
		1	B, T			EP0	DDQ		52107746
		1	B, T			EP0	DDQ		52104546
		1	J, U			EP0	DDQ		52104547

CHEROKEE (XJ)

SERIES	LINE	BODY	ENGINE	TRANSMISSION
L = LOWLINE	T = JEEP - 2WD B = JEEP - 2WD (RHD) J = JEEP - 4WD U = JEEP - 4WD (RHD)	72 = SPORT UTILITY 2-DR 74 = SPORT UTILITY 4-DR	ENC = 2.5L 4 Cyl Turbo Diesel Engine EPB = 2.5L 4 Cylinder Engine EPE = Engine - 2.5L Power Tech I-4 Cyl. ERH = 4.0L Power Tech I-6 Engine	DDQ = 5-Speed Manual Transmission DGS = 4-Speed Automatic AW4 Transmission DGO = ALL AUTOMATIC TRANSMISSIONS DBB = ALL MANUAL TRANSMISSIONS

Gear Train AX 5 (DDQ)
Figure AX-410

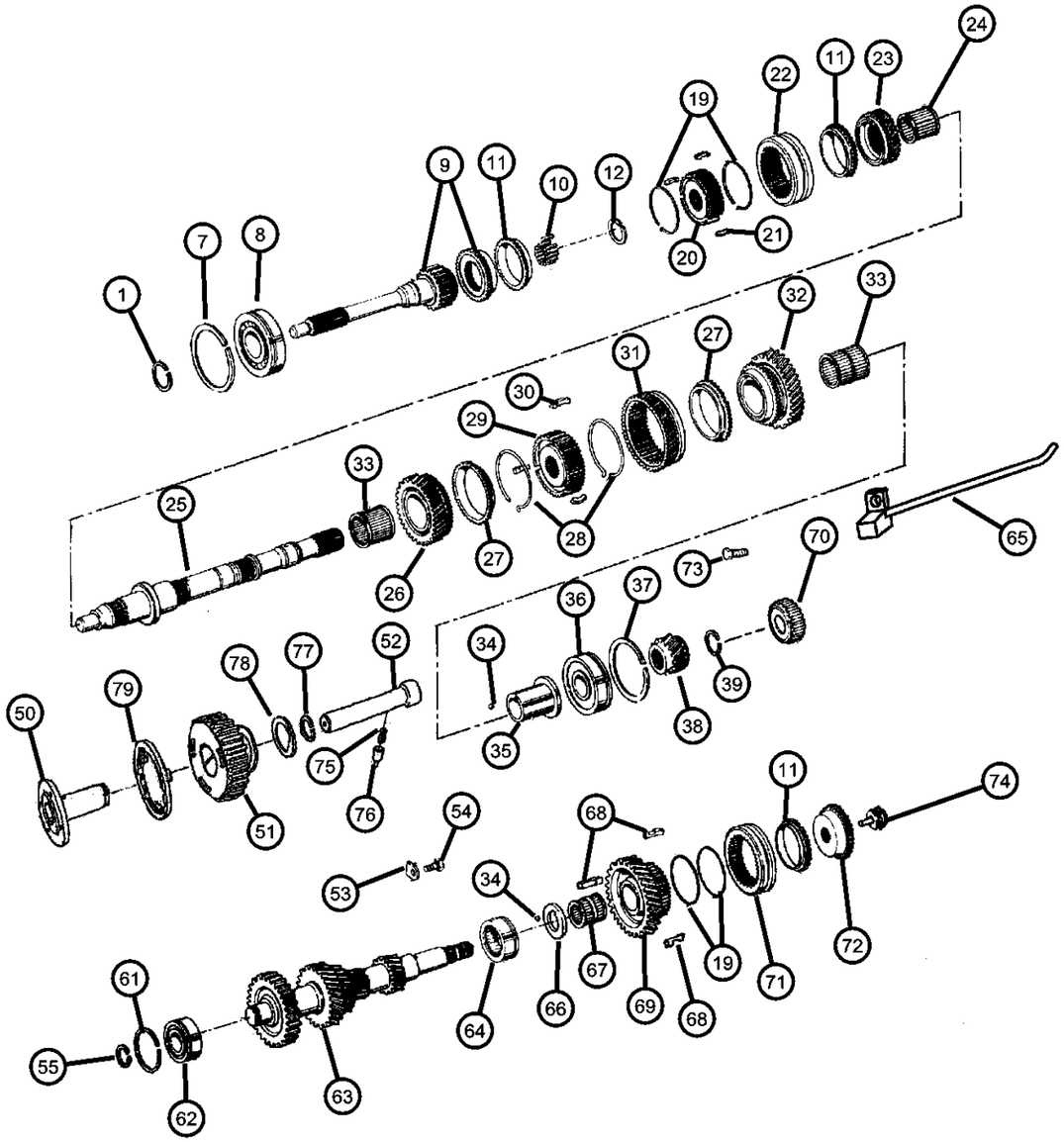

ITEM	PART NUMBER	QTY	LINE	SERIES	BODY	ENGINE	TRANS	TRIM	DESCRIPTION
27									STOP RING, Synchronizer
	83500567	2	B, T			EP0	DDQ		52107746
		2	J, U			EP0	DDQ		52107747
		2	B, T			EP0	DDQ		52104546
		2	J, U			EP0	DDQ		52104547
28									SPRING, Synchronizer Key
	83500569	2	B, T			EP0	DDQ		52107746
		2	J, U			EP0	DDQ		52107747
		2	B, T			EP0	DDQ		52104546
		2	J, U			EP0	DDQ		52104547
29									SYNCHRONIZER, First and Second
	83500561	1	B, T			EP0	DDQ		52107746
		1	J, U			EP0	DDQ		52107747
		1	B, T			EP0	DDQ		52104546
		1	J, U			EP0	DDQ		52104547
30									KEY, Synchronizer
	83500564	3	J, U			EP0	DDQ		52107747
		3	B, T			EP0	DDQ		52107746
		3	B, T			EP0	DDQ		52104546
		3	J, U			EP0	DDQ		52104547
31									GEAR, Reverse
	04897101AA	1	B, T			EP0	DDQ		52104546
		1	J, U			EP0	DDQ		52104547
	83500555	1	B, T			EP0	DDQ		52107746
		1	J, U			EP0	DDQ		52107747
32									GEAR, First
	83506017	1	J, U			EP0	DDQ		52107747
		1	B, T			EP0	DDQ		52107746
		1	B, T			EP0	DDQ		52104546
		1	J, U			EP0	DDQ		52104547
33									BEARING, First Gear
	83506031	1	B, T			EP0	DDQ		52107746

CHEROKEE (XJ)

SERIES	LINE	BODY	ENGINE	TRANSMISSION
L = LOWLINE	T = JEEP - 2WD B = JEEP - 2WD (RHD) J = JEEP - 4WD U = JEEP - 4WD (RHD)	72 = SPORT UTILITY 2-DR 74 = SPORT UTILITY 4-DR	ENC = 2.5L 4 Cyl Turbo Diesel Engine EPB = 2.5L 4 Cylinder Engine EPE = Engine - 2.5L Power Tech I-4 Cyl. ERH = 4.0L Power Tech I-6 Engine	DDQ = 5-Speed Manual Transmission DGS = 4-Speed Automatic AW4 Transmission DGO = ALL AUTOMATIC TRANSMISSIONS DBB = ALL MANUAL TRANSMISSIONS

Gear Train AX 5 (DDQ)
Figure AX-410

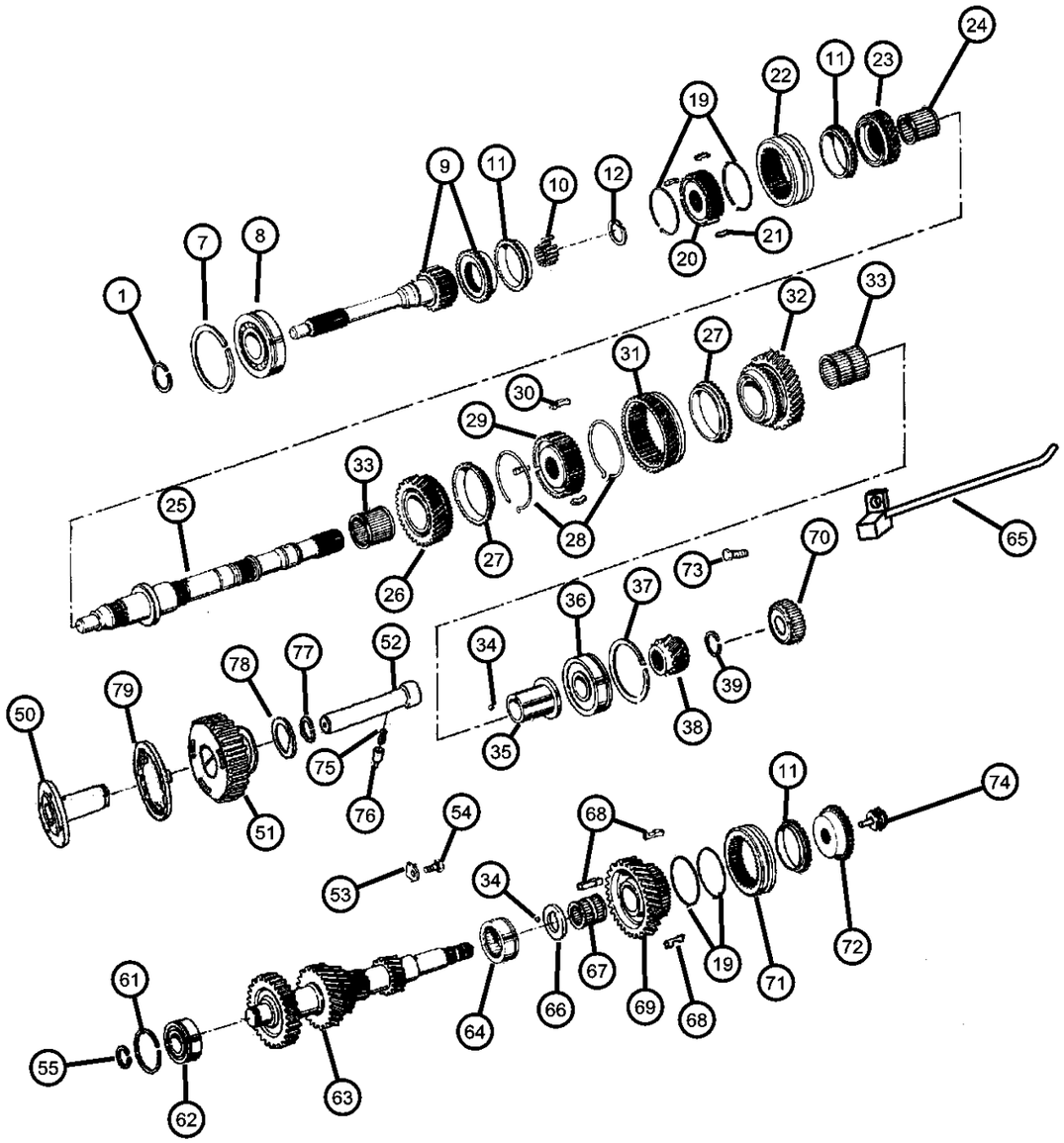

ITEM	PART NUMBER	QTY	LINE	SERIES	BODY	ENGINE	TRANS	TRIM	DESCRIPTION
		1	J, U			EP0	DDQ		52107747
		1	B, T			EP0	DDQ		52104546
		2	J, U			EP0	DDQ		52104547
34									BALL, Reverse
	83500573	1	J, U			EP0	DDQ		52107747
		2	B, T			EP0	DDQ		52107746
		2	B, T			EP0	DDQ		52104546
		1	J, U			EP0	DDQ		52104547
35									RACE, First Gear
	83506026	1	J, U			EP0	DDQ		52107747
		1	B, T			EP0	DDQ		52107746
		1	B, T			EP0	DDQ		52104546
		1	J, U			EP0	DDQ		52104547
36									BEARING, Mainshaft
	83506030	1	B, T			EP0	DDQ		52107746
		1	J, U			EP0	DDQ		52107747
		1	B, T			EP0	DDQ		52104546
		1	J, U			EP0	DDQ		52104547
37									SNAP RING
	83500613	1	B, T			EP0	DDQ		52107746
		1	J, U			EP0	DDQ		52107747
		1	B, T			EP0	DDQ		52104546
		1	J, U			EP0	DDQ		52104547
38									GEAR, Fifth
	83500971	1	J, U			EP0	DDQ		52107747
		1	B, T			EP0	DDQ		52107746
		1	B, T			EP0	DDQ		52104546
		1	J, U			EP0	DDQ		52104547
39									SNAP RING, Mainshaft, 2.67-2.72mm
	83500587	1	B, T			EP0	DDQ		52107746
		1	J, U			EP0	DDQ		52107747
		1	B, T			EP0	DDQ		52104546

CHEROKEE (XJ)

SERIES	LINE	BODY	ENGINE	TRANSMISSION
L = LOWLINE	T = JEEP - 2WD B = JEEP - 2WD (RHD) J = JEEP - 4WD U = JEEP - 4WD (RHD)	72 = SPORT UTILITY 2-DR 74 = SPORT UTILITY 4-DR	ENC = 2.5L 4 Cyl Turbo Diesel Engine EPB = 2.5L 4 Cylinder Engine EPE = Engine - 2.5L Power Tech I-4 Cyl. ERH = 4.0L Power Tech I-6 Engine	DDQ = 5-Speed Manual Transmission DGS = 4-Speed Automatic AW4 Transmission DGO = ALL AUTOMATIC TRANSMISSIONS DBB = ALL MANUAL TRANSMISSIONS

Gear Train AX 5 (DDQ)
Figure AX-410

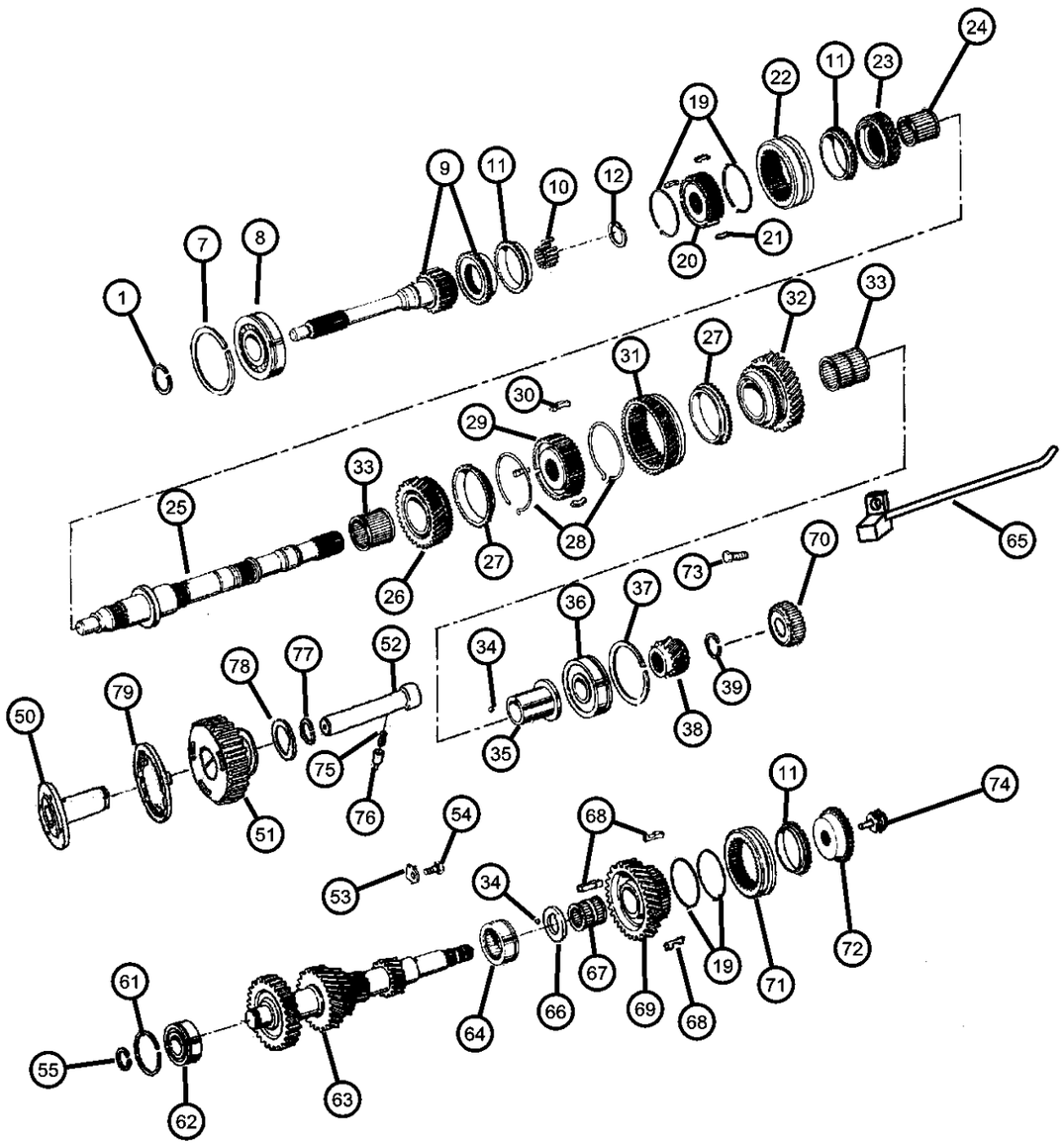

ITEM	PART NUMBER	QTY	LINE	SERIES	BODY	ENGINE	TRANS	TRIM	DESCRIPTION
		1	J, U			EP0	DDQ		52104547
-40									SNAP RING, Mainshaft, 2.73-2.78mm
	83500588	1	B, T			EP0	DDQ		52107746
		1	J, U			EP0	DDQ		52107747
		1	B, T			EP0	DDQ		52104546
		1	J, U			EP0	DDQ		52104547
-41									SNAP RING, Mainshaft, 2.79-2.84mm
	83500589	1	B, T			EP0	DDQ		52107746
		1	J, U			EP0	DDQ		52107747
		1	B, T			EP0	DDQ		52104546
		1	J, U			EP0	DDQ		52104547
-42									SNAP RING, Mainshaft, 2.85-2.90mm
	83500590	1	B, T			EP0	DDQ		52107746
		1	J, U			EP0	DDQ		52107747
		1	B, T			EP0	DDQ		52104546
		1	J, U			EP0	DDQ		52104547
-43									SNAP RING, Mainshaft, 2.91-2.96mm
	83500591	1	B, T			EP0	DDQ		52107746
		1	J, U			EP0	DDQ		52107747
		1	B, T			EP0	DDQ		52104546
		1	J, U			EP0	DDQ		52104547
-44									SNAP RING, Mainshaft, 2.97-3.02mm
	83500592	1	B, T			EP0	DDQ		52107746
		1	J, U			EP0	DDQ		52107747
		1	B, T			EP0	DDQ		52104546
		1	J, U			EP0	DDQ		52104547
-45									SNAP RING, Mainshaft, 3.03-3.08mm
	83500593	1	B, T			EP0	DDQ		52107746
		1	J, U			EP0	DDQ		52107747
		1	B, T			EP0	DDQ		52104546

CHEROKEE (XJ)

SERIES	LINE	BODY	ENGINE	TRANSMISSION
L = LOWLINE	T = JEEP - 2WD B = JEEP - 2WD (RHD) J = JEEP - 4WD U = JEEP - 4WD (RHD)	72 = SPORT UTILITY 2-DR 74 = SPORT UTILITY 4-DR	ENC = 2.5L 4 Cyl Turbo Diesel Engine EPB = 2.5L 4 Cylinder Engine EPE = Engine - 2.5L Power Tech I-4 Cyl. ERH = 4.0L Power Tech I-6 Engine	DDQ = 5-Speed Manual Transmission DGS = 4-Speed Automatic AW4 Transmission DGO = ALL AUTOMATIC TRANSMISSIONS DBB = ALL MANUAL TRANSMISSIONS

Gear Train AX 5 (DDQ)
Figure AX-410

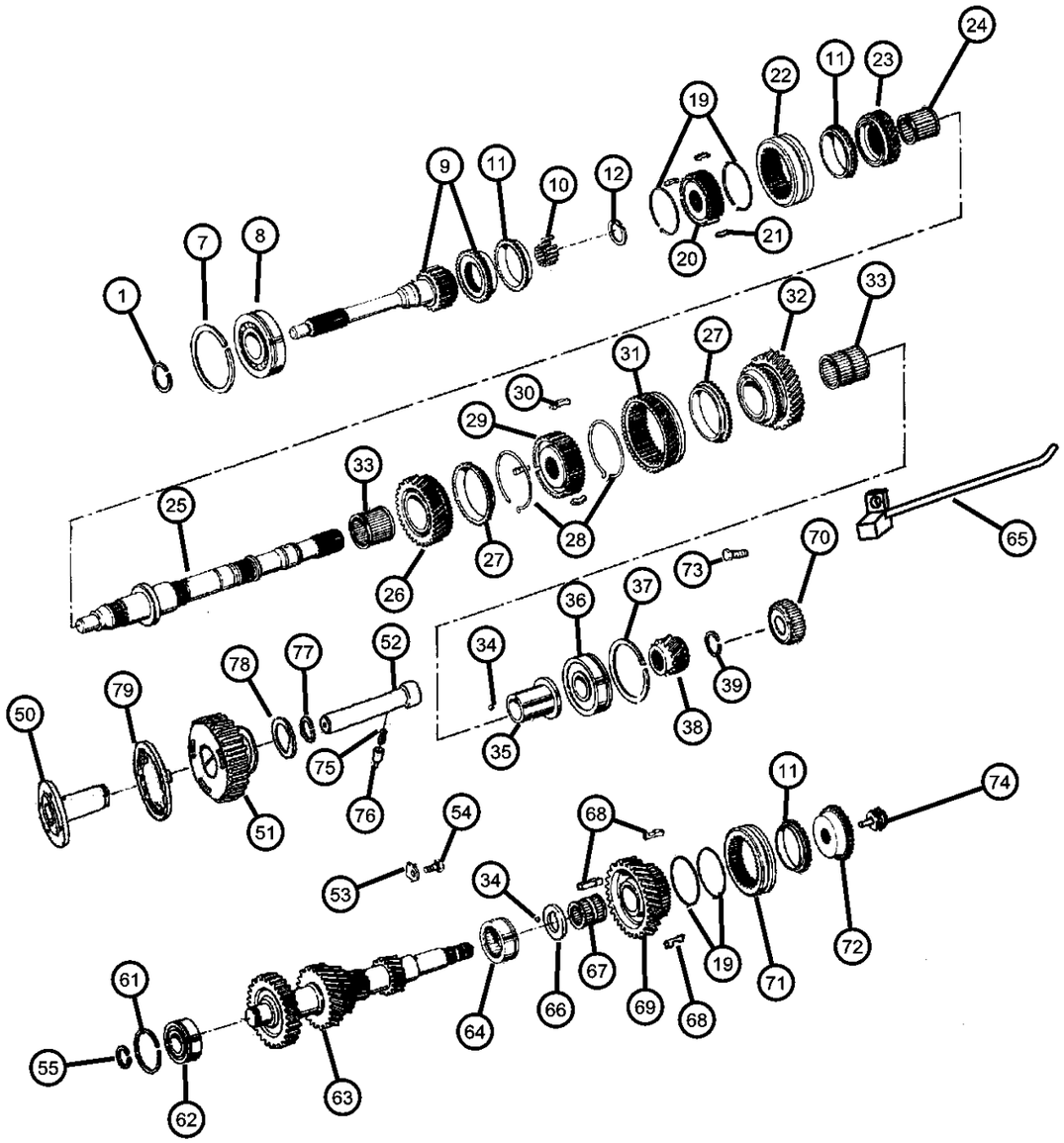

ITEM	PART NUMBER	QTY	LINE	SERIES	BODY	ENGINE	TRANS	TRIM	DESCRIPTION
		1	J, U			EP0	DDQ		52104747
-46									SNAP RING, Mainshaft, 3.09-3.14mm
	83500594	1	B, T			EP0	DDQ		52107746
		1	J, U			EP0	DDQ		52107747
		1	B, T			EP0	DDQ		52104546
		1	J, U			EP0	DDQ		52104547
-47									SNAP RING, Mainshaft, 3.15-3.20mm
	83500595	1	J, U			EP0	DDQ		52107747
		1	B, T			EP0	DDQ		52107746
		1	B, T			EP0	DDQ		52104546
		1	J, U			EP0	DDQ		52104547
-48									SNAP RING, Mainshaft, 3.21-3.26mm
	83500596	1	B, T			EP0	DDQ		52107746
		1	J, U			EP0	DDQ		52107747
		1	B, T			EP0	DDQ		52104546
		1	J, U			EP0	DDQ		52104547
-49									SNAP RING, Mainshaft
	83500597	1	B, T			EP0	DDQ		3.27mm/3.32mm. 52107746
		1	J, U			EP0	DDQ		3.27mm/.3.32mm. 52107747
		1	B, T			EP0	DDQ		3.27mm/3.32mm. 52104546
		1	J, U			EP0	DDQ		3.27mm/3.32mm. 52104547
50									RACE, Idler Gear
	04897107AA	1	B, T			EP0	DDQ		52104546
		1	J, U			EP0	DDQ		52104547
51									GEAR, Reverse Idler
	04897102AA	1	B, T			EP0	DDQ		52104546
		1	J, U			EP0	DDQ		52104547
	83503555	1	B, T			EP0	DDQ		52107746
		1	J, U			EP0	DDQ		562107747
52									IDLER SHAFT, Transmission
	04897104AA	1	B, T			EP0	DDQ		52104546

CHEROKEE (XJ)

SERIES	LINE	BODY	ENGINE	TRANSMISSION
L = LOWLINE	T = JEEP - 2WD B = JEEP - 2WD (RHD) J = JEEP - 4WD U = JEEP - 4WD (RHD)	72 = SPORT UTILITY 2-DR 74 = SPORT UTILITY 4-DR	ENC = 2.5L 4 Cyl Turbo Diesel Engine EPB = 2.5L 4 Cylinder Engine EPE = Engine - 2.5L Power Tech I-4 Cyl. ERH = 4.0L Power Tech I-6 Engine	DDQ = 5-Speed Manual Transmission DGS = 4-Speed Automatic AW4 Transmission DGO = ALL AUTOMATIC TRANSMISSIONS DBB = ALL MANUAL TRANSMISSIONS

Gear Train AX 5 (DDQ)
Figure AX-410

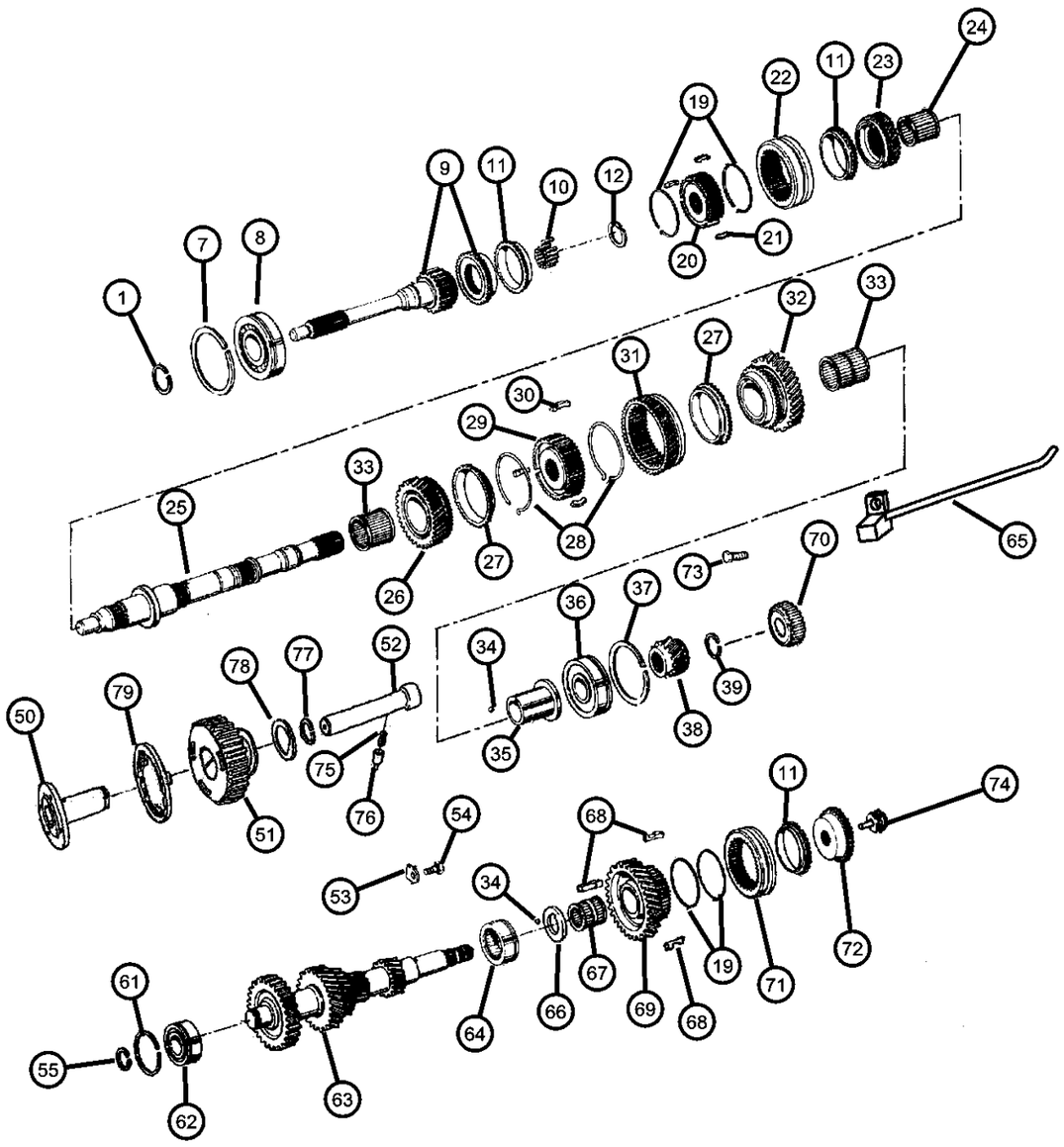

ITEM	PART NUMBER	QTY	LINE	SERIES	BODY	ENGINE	TRANS	TRIM	DESCRIPTION
		1	J, U			EP0	DDQ		52104547
	83500570	1	B, T			EP0	DDQ		52107746
		1	J, U			EP0	DDQ		52107747
53									STOPPER, Idler Shaft
	04883380AA	1	J, U			EP0	DDQ		52107747
		1	B, T			EP0	DDQ		52107746
		1	B, T			EP0	DDQ		52104546
		1	J, U			EP0	DDQ		52104547
54									BOLT AND LOCK WASHER, Hex Head, M8x1.25x20
	83500615	1	B, T			EP0	DDQ		52104546
		1	J, U			EP0	DDQ		52104547
		1	B, T			EP0	DDQ		52107746
		1	J, U			EP0	DDQ		52107747
55									SNAP RING, Cluster Gear, 2.05mm
	83500581	1	B, T			EP0	DDQ		52107746
		1	J, U			EP0	DDQ		52107747
		1	B, T			EP0	DDQ		52104546
		1	J, U			EP0	DDQ		52104547
-56									SNAP RING, Cluster Gear, 2.10-2.15mm
	83500582	1	B, T			EP0	DDQ		52107746
		1	J, U			EP0	DDQ		52107747
		1	B, T			EP0	DDQ		52104546
		1	J, U			EP0	DDQ		52104547
-57									SNAP RING, Cluster Gear, 2.15mm
	83500583	1	B, T			EP0	DDQ		52107746
		1	J, U			EP0	DDQ		52107747
		1	B, T			EP0	DDQ		52104546
		1	J, U			EP0	DDQ		52104547
-58									SNAP RING, Cluster Gear, 2.20mm
	83500584	1	B, T			EP0	DDQ		52107746
		1	J, U			EP0	DDQ		52107747
		1	B, T			EP0	DDQ		52104546

CHEROKEE (XJ)

SERIES	LINE	BODY	ENGINE	TRANSMISSION
L = LOWLINE	T = JEEP - 2WD B = JEEP - 2WD (RHD) J = JEEP - 4WD U = JEEP - 4WD (RHD)	72 = SPORT UTILITY 2-DR 74 = SPORT UTILITY 4-DR	ENC = 2.5L 4 Cyl Turbo Diesel Engine EPB = 2.5L 4 Cylinder Engine EPE = Engine - 2.5L Power Tech I-4 Cyl. ERH = 4.0L Power Tech I-6 Engine	DDQ = 5-Speed Manual Transmission DGS = 4-Speed Automatic AW4 Transmission DGO = ALL AUTOMATIC TRANSMISSIONS DBB = ALL MANUAL TRANSMISSIONS

Gear Train AX 5 (DDQ)
Figure AX-410

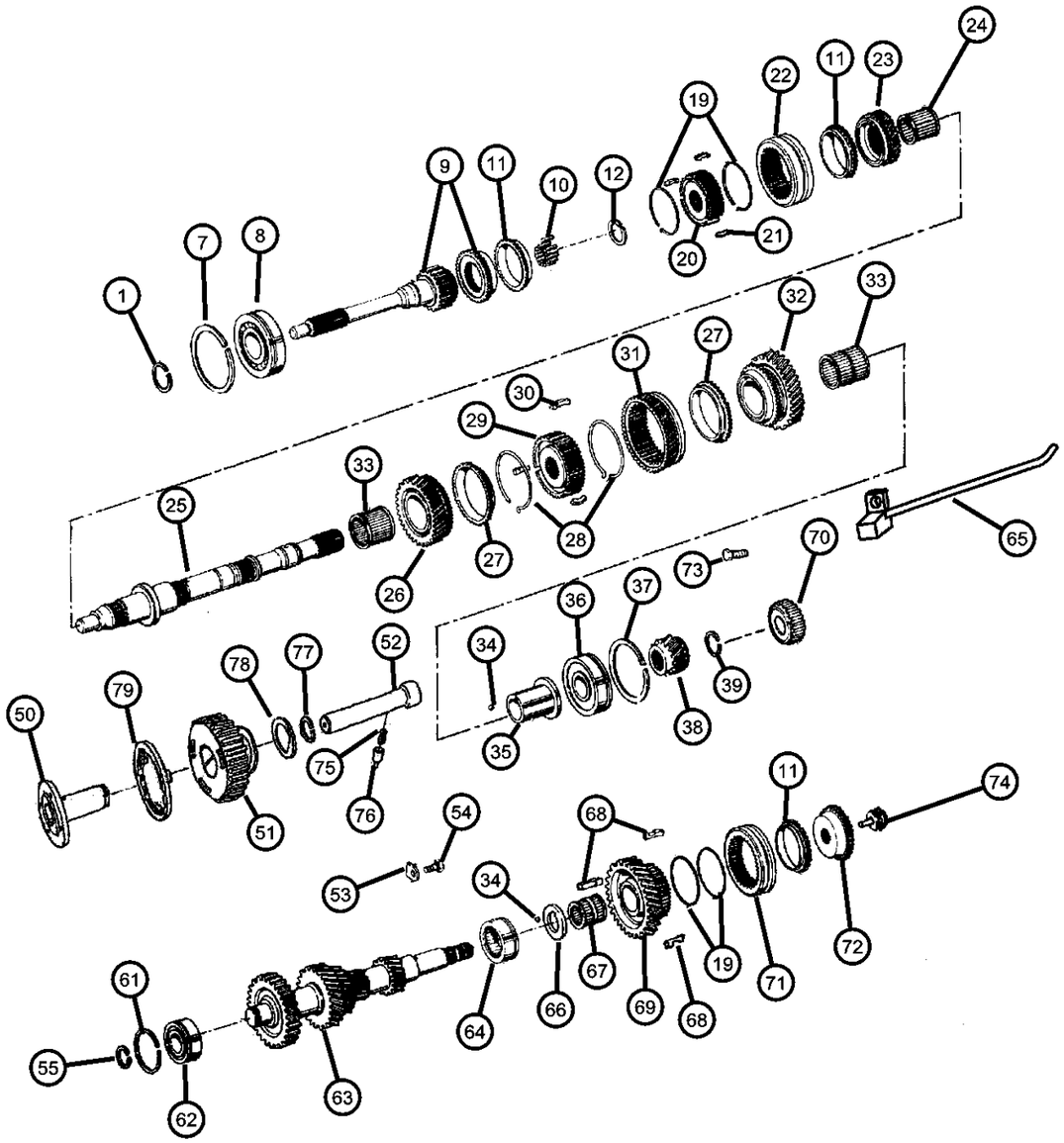

ITEM	PART NUMBER	QTY	LINE	SERIES	BODY	ENGINE	TRANS	TRIM	DESCRIPTION
		1	J, U			EP0	DDQ		52104547
-59									SNAP RING, Cluster Gear, 2.25mm
	83500585	1	B, T			EP0	DDQ		52107746
		1	J, U			EP0	DDQ		52107747
		1	B, T			EP0	DDQ		52104546
		1	J, U			EP0	DDQ		52104547
-60									SNAP RING, Cluster Gear, 2.30mm
	83500586	1	B, T			EP0	DDQ		52107746
		1	J, U			EP0	DDQ		52107747
		1	B, T			EP0	DDQ		52104546
		1	J, U			EP0	DDQ		52104547
61									SNAP RING
	83500612	1	B, T			EP0	DDQ		With Transmission (52107746)
		1	J, U			EP0	DDQ		With Transmission (52107747)
		1	B, T			EP0	DDQ		With Transmission (52104546)
		1	J, U			EP0	DDQ		With Transmission (52104547)
	83506032	1	B, T			EP0	DDQ		52107746
		1	B, T			EP0	DDQ		52104546
62									BEARING, Cluster Gear
	83506032	1	B, T			EP0	DDQ		52107746
		1	J, U			EP0	DDQ		52107747
		1	B, T			EP0	DDQ		52104546
		1	J, U			EP0	DDQ		52104547
63	04796003	1	J, U			EN0	DDQ		GEAR, Countershaft
64									BEARING, Cluster Gear
	83506033	1	B, T			EP0	DDQ		52107746
		1	J, U			EP0	DDQ		52107747
		1	B, T			EP0	DDQ		52104546
		1	J, U			EP0	DDQ		52104547
65									PIPE, Oil Receiver
	83502122	1	B, T			EP0	DDQ		52107746
		1	B, T			EP0	DDQ		52104546
66									THRUST WASHER, Fourth Gear

CHEROKEE (XJ)

SERIES	LINE	BODY	ENGINE	TRANSMISSION
L = LOWLINE	T = JEEP - 2WD B = JEEP - 2WD (RHD) J = JEEP - 4WD U = JEEP - 4WD (RHD)	72 = SPORT UTILITY 2-DR 74 = SPORT UTILITY 4-DR	ENC = 2.5L 4 Cyl Turbo Diesel Engine EPB = 2.5L 4 Cylinder Engine EPE = Engine - 2.5L Power Tech I-4 Cyl. ERH = 4.0L Power Tech I-6 Engine	DDQ = 5-Speed Manual Transmission DGS = 4-Speed Automatic AW4 Transmission DGO = ALL AUTOMATIC TRANSMISSIONS DBB = ALL MANUAL TRANSMISSIONS

Gear Train AX 5 (DDQ)
Figure AX-410

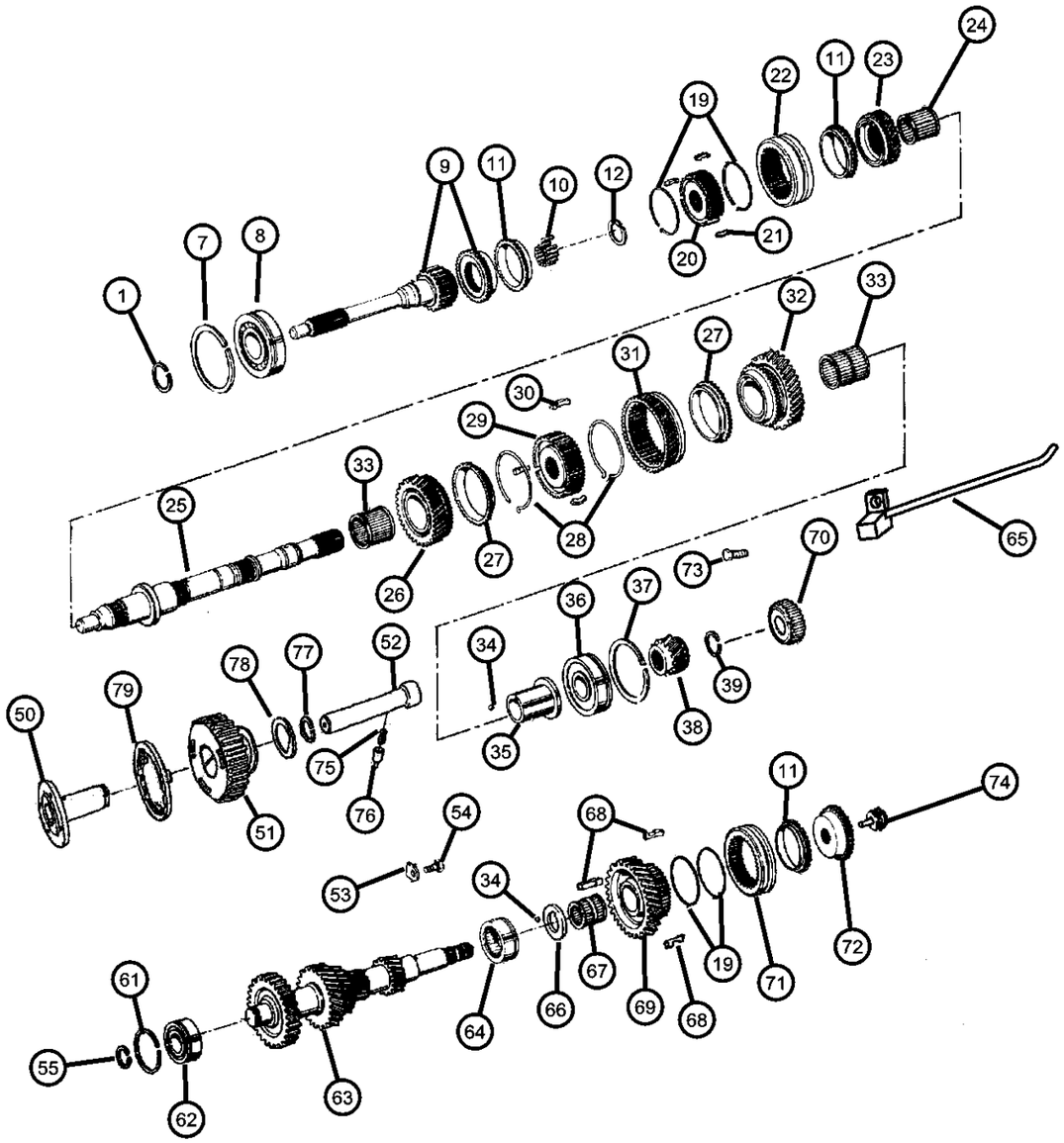

ITEM	PART NUMBER	QTY	LINE	SERIES	BODY	ENGINE	TRANS	TRIM	DESCRIPTION
	83506025	1	B, T			EP0	DDQ		52107746
		1	J, U			EP0	DDQ		52107747
		1	B, T			EP0	DDQ		52104546
		1	J, U			EP0	DDQ		52104547
67									NEEDLE BEARING, Fifth Gear
	83500644	1	J, U			EP0	DDQ		52107747
		1	B, T			EP0	DDQ		52107746
		1	B, T			EP0	DDQ		52104546
		2	J, U			EP0	DDQ		52104547
68									KEY, Synchronizer
	83500641	3	B, T			EP0	DDQ		52107746
		3	J, U			EP0	DDQ		52107747
		3	B, T			EP0	DDQ		52104546
		3	J, U			EP0	DDQ		52104547
69									GEAR, Countershaft Fifth
	83506022	1	J, U			EP0	DDQ		52107747
		1	B, T			EP0	DDQ		52107746
		1	B, T			EP0	DDQ		52104546
		1	J, U			EP0	DDQ		52104547
70									GEAR, Speedometer Drive
	83502121	1	B, T			EP0	DDQ		52107746
		1	B, T			EP0	DDQ		52104546
71									SLEEVE, Synchronizer
	04746657	1	J			EP0	DDQ		52107747
		1	B, T			EP0	DDQ		52107746
		1	B, T			EP0	DDQ		52104546
		1	J, U			EP0	DDQ		52104547
72									GEAR, Fifth Splined
	83506024	1	B, T			EP0	DDQ		52107746
		1	J, U			EP0	DDQ		52107747
		1	B, T			EP0	DDQ		52104546
		1	J, U			EP0	DDQ		52104547
73									BOLT, Oil Receiver Pipe

CHEROKEE (XJ)

SERIES	LINE	BODY	ENGINE	TRANSMISSION
L = LOWLINE	T = JEEP - 2WD B = JEEP - 2WD (RHD) J = JEEP - 4WD U = JEEP - 4WD (RHD)	72 = SPORT UTILITY 2-DR 74 = SPORT UTILITY 4-DR	ENC = 2.5L 4 Cyl Turbo Diesel Engine EPB = 2.5L 4 Cylinder Engine EPE = Engine - 2.5L Power Tech I-4 Cyl. ERH = 4.0L Power Tech I-6 Engine	DDQ = 5-Speed Manual Transmission DGS = 4-Speed Automatic AW4 Transmission DGO = ALL AUTOMATIC TRANSMISSIONS DBB = ALL MANUAL TRANSMISSIONS

Gear Train AX 5 (DDQ)
Figure AX-410

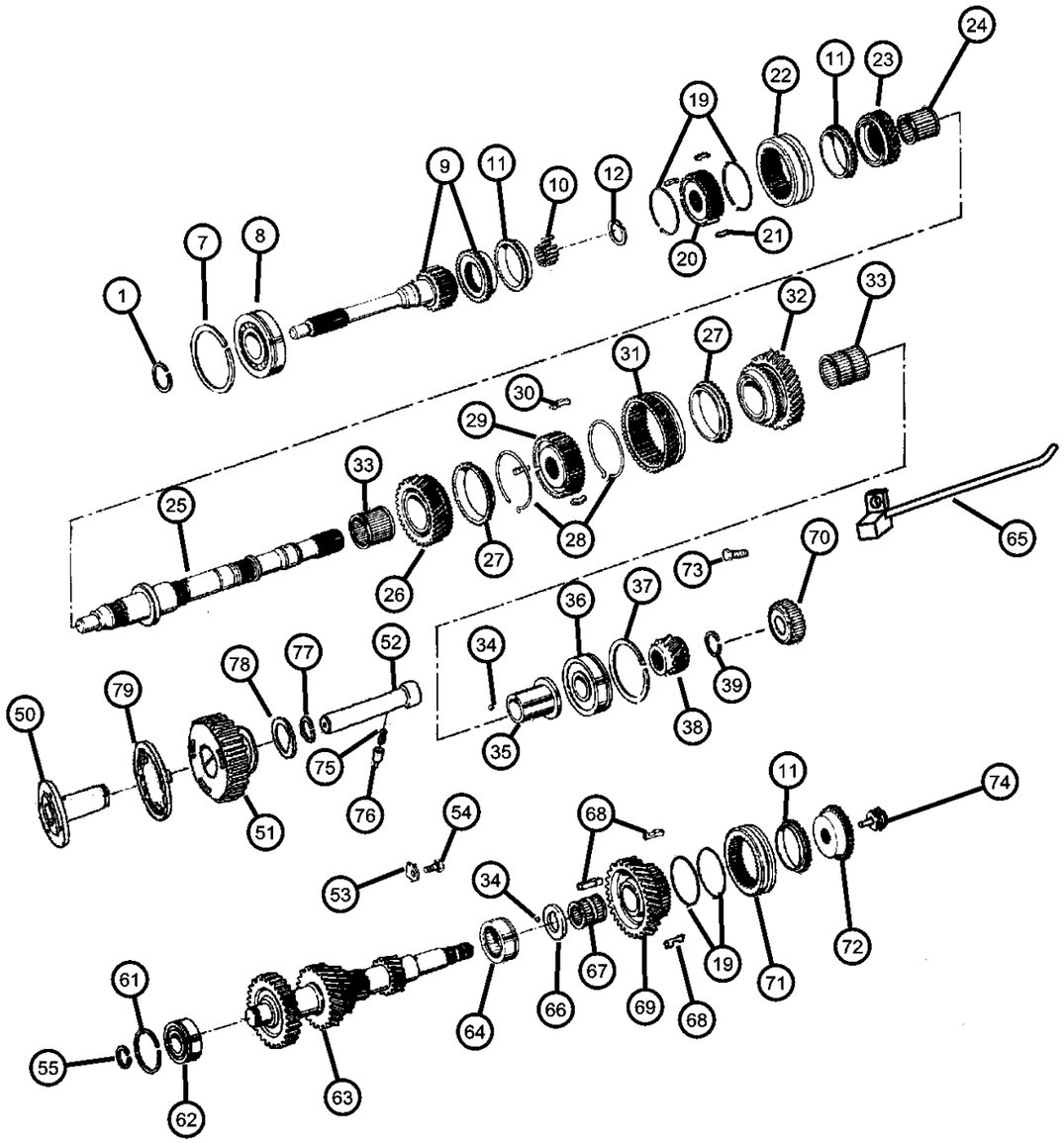

ITEM	PART NUMBER	QTY	LINE	SERIES	BODY	ENGINE	TRANS	TRIM	DESCRIPTION
	83502126	1	B, T			EP0	DDQ		52107746
		1	B, T			EP0	DDQ		52104546
74									PIPE, Oil Receiver
	83500646	1	J, U			EP0	DDQ		52107747
		1	B, T			EP0	DDQ		52107746
		1	B, T			EP0	DDQ		52104546
		1	J, U			EP0	DDQ		52104547
75									SPRING, Compression
	04897110AA	1	B, T			EP0	DDQ		52104546
		1	J, U			EP0	DDQ		52104547
76									PIN
	04897109AA	1	B, T			EP0	DDQ		52104546
		1	J, U			EP0	DDQ		52104547
77									RING, Snap
	04897112AA	1	B, T			EP0	DDQ		52104546
		1	J, U			EP0	DDQ		52104547
78									PLATE, Transmission Idler Shaft
	04897108AA	1	B, T			EP0	DDQ		52104546
		1	J, U			EP0	DDQ		52104547
79									RING, Transmission
	04897111AA	1	B, T			EP0	DDQ		52104546
		1	J, U			EP0	DDQ		52104547

CHEROKEE (XJ)

SERIES	LINE	BODY	ENGINE	TRANSMISSION
L = LOWLINE	T = JEEP - 2WD B = JEEP - 2WD (RHD) J = JEEP - 4WD U = JEEP - 4WD (RHD)	72 = SPORT UTILITY 2-DR 74 = SPORT UTILITY 4-DR	ENC = 2.5L 4 Cyl Turbo Diesel Engine EPB = 2.5L 4 Cylinder Engine EPE = Engine - 2.5L Power Tech I-4 Cyl. ERH = 4.0L Power Tech I-6 Engine	DDQ = 5-Speed Manual Transmission DGS = 4-Speed Automatic AW4 Transmission DGO = ALL AUTOMATIC TRANSMISSIONS DBB = ALL MANUAL TRANSMISSIONS

Gear Train AX 15 (DDQ)
Figure AX-415

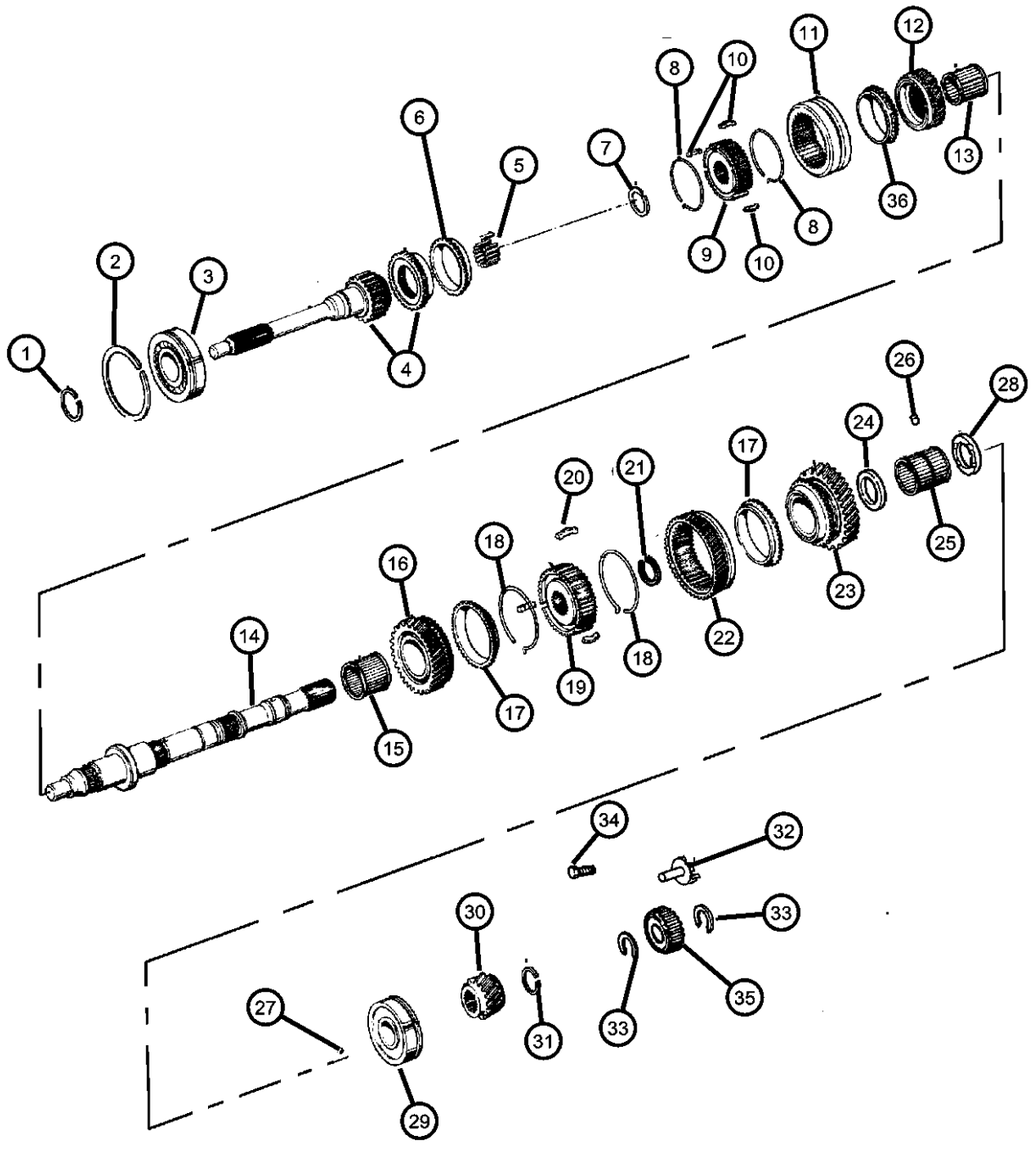

ITEM	PART NUMBER	QTY	LINE	SERIES	BODY	ENGINE	TRANS	TRIM	DESCRIPTION
Notes:									
DDQ = 5 Speed Manual Transmission									
ER0 = All 4.0L 6 Cylinder Gas Engines									
ENC = 2.5L 4 Cylinder Turbo Diesel Engine									
1									SNAP RING
	83506099	1	B, T			ER0	DDQ		Stamped A (X=2.10mm/2.15mm). 52107749
		1	J, U			EN0	DDQ		Stamped A (X=2.10mm/2.15mm). 52107752
		1	J, U			ER0	DDQ		Stamped A (X=2.10mm/2.15mm). 52108047
		1	J, U			ER0	DDQ		Stamped A (X=2.10mm/2.15mm). 52108047AB
		1	B, T			ER0	DDQ		Stamped A (X=2.10mm/2.15mm). 52108048AB
		1	J, U			EN0	DDQ		Stamped A (X=2.10mm/2.15mm). 52108121AB
	83506214	1	B, T			ER0	DDQ		Stamped B (X=2.15mm/2.20mm). 52107749
		1	J, U			EN0	DDQ		Stamped B (X=2.15mm/2.20mm). 52107752
		1	J, U			ER0	DDQ		Stamped B (X=2.15mm/2.20mm). 52108047
		1	J, U			ER0	DDQ		Stamped B (X=2.15mm/2.20mm). 52108047AB
		1	B, T			ER0	DDQ		Stamped B (X=2.15mm/2.20mm). 52108048AB
		1	J, U			EN0	DDQ		Stamped B (X=2.15mm/2.20mm). 52108121AB
	83506215	1	B, T			ER0	DDQ		Stamped C (X=2.20mm/2.25mm). 52107749
		1	J, U			EN0	DDQ		Stamped C (X=2.20mm/2.25mm). 52107752
		1	J, U			ER0	DDQ		Stamped C (X=2.20mm/2.25mm). 52108047
		1	J, U			ER0	DDQ		Stamped C (X=2.20mm/2.25mm). 52108047AB

CHEROKEE (XJ)

SERIES	LINE	BODY	ENGINE	TRANSMISSION
L = LOWLINE	T = JEEP - 2WD B = JEEP - 2WD (RHD) J = JEEP - 4WD U = JEEP - 4WD (RHD)	72 = SPORT UTILITY 2-DR 74 = SPORT UTILITY 4-DR	ENC = 2.5L 4 Cyl Turbo Diesel Engine EPB = 2.5L 4 Cylinder Engine EPE = Engine - 2.5L Power Tech I-4 Cyl. ERH = 4.0L Power Tech I-6 Engine	DDQ = 5-Speed Manual Transmission DGS = 4-Speed Automatic AW4 Transmission DGO = ALL AUTOMATIC TRANSMISSIONS DBB = ALL MANUAL TRANSMISSIONS

Gear Train AX 15 (DDQ)
Figure AX-415

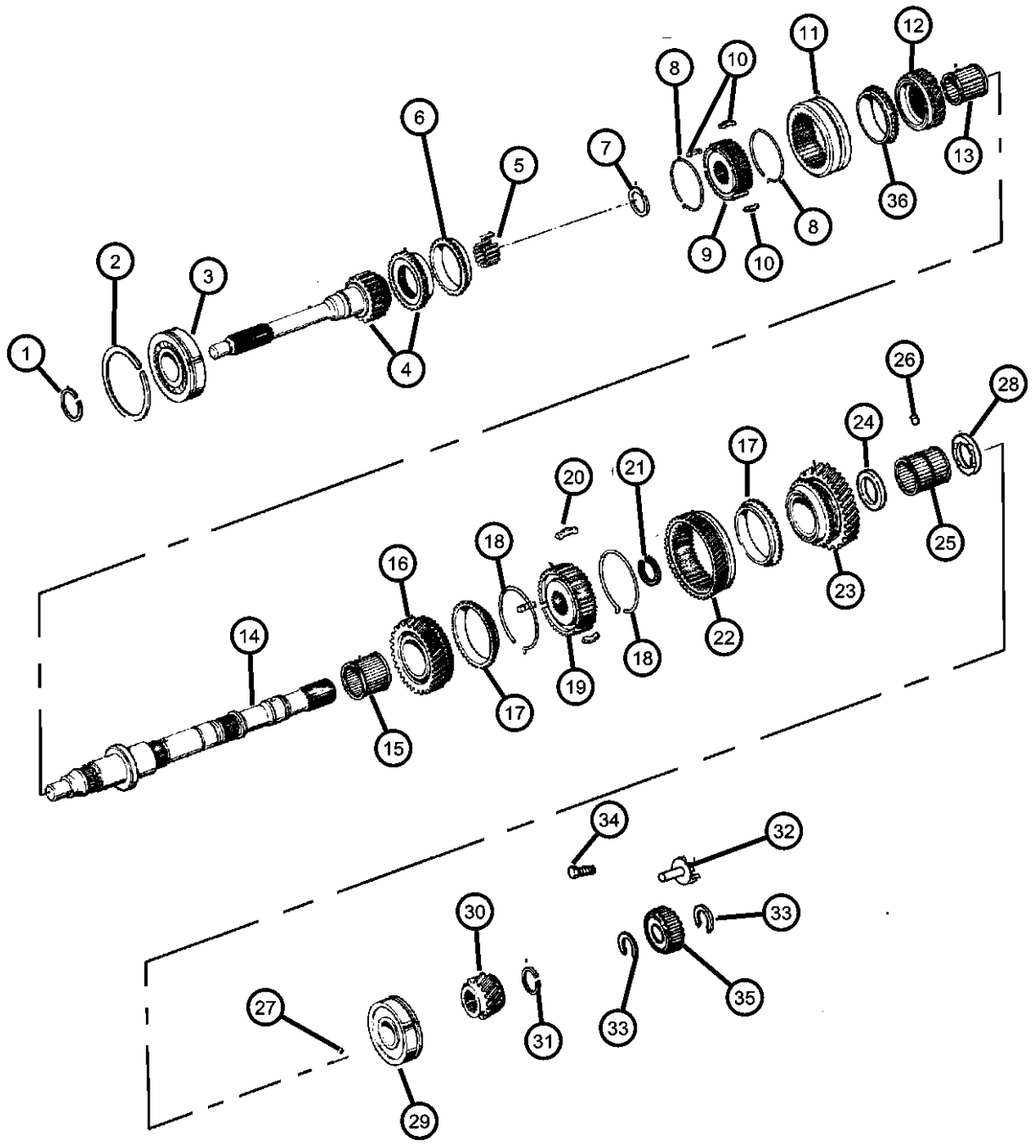

ITEM	PART NUMBER	QTY	LINE	SERIES	BODY	ENGINE	TRANS	TRIM	DESCRIPTION
		1	B, T			ER0	DDQ		Stamped C (X=2.20mm/2.25mm). 52108048AB
		1	J, U			EN0	DDQ		Stamped C (X=2.20mm/2.25mm). 52108121AB
	83506216	1	B, T			ER0	DDQ		Stamped D (X=2.25mm/2.30mm). 52107749
		1	J, U			EN0	DDQ		Stamped D (X=2.25mm/2.30mm). 52107752
		1	J, U			ER0	DDQ		Stamped D (X=2.25mm/2.30mm). 52108047
		1	J, U			ER0	DDQ		Stamped D (X=2.25mm/2.30mm). 52105047AB
		1	B, T			ER0	DDQ		Stamped D (X=2.25mm/2.30mm). 52108048AB
		1	J, U			EN0	DDQ		Stamped D (X=2.25mm/2.30mm). 52108121AB
	83506217	1	B, T			ER0	DDQ		Stamped E (X=2.30mm/2.35mm). 52107749
		1	J, U			EN0	DDQ		Stamped E (X=2.30mm/2.35mm). 52107752
		1	J, U			ER0	DDQ		Stamped E (X=2.30mm/2.35mm). 52108047
		1	J, U			ER0	DDQ		Stamped E (X=2.30mm/2.35mm). 52108047AB
		1	B, T			ER0	DDQ		Stamped E (X=2.30mm/2.35mm). 52108048AB
		1	J, U			EN0	DDQ		Stamped E (X=2.30mm/2.35mm). 52108121AB
	83506218	1	B, T			ER0	DDQ		Stamped F (X=2.35mm/2.40mm). 52107749
		1	J, U			EN0	DDQ		Stamped F (X=2.35mm/2.40mm). 52107752
		1	J, U			ER0	DDQ		Stamped F (X=2.35mm/2.40mm). 52108048AB
		1	J, U			ER0	DDQ		Stamped F (X=2.35mm/2.40mm). 52108047AB

CHEROKEE (XJ)

SERIES	LINE	BODY	ENGINE	TRANSMISSION
L = LOWLINE	T = JEEP - 2WD B = JEEP - 2WD (RHD) J = JEEP - 4WD U = JEEP - 4WD (RHD)	72 = SPORT UTILITY 2-DR 74 = SPORT UTILITY 4-DR	ENC = 2.5L 4 Cyl Turbo Diesel Engine EPB = 2.5L 4 Cylinder Engine EPE = Engine - 2.5L Power Tech I-4 Cyl. ERH = 4.0L Power Tech I-6 Engine	DDQ = 5-Speed Manual Transmission DGS = 4-Speed Automatic AW4 Transmission DGO = ALL AUTOMATIC TRANSMISSIONS DBB = ALL MANUAL TRANSMISSIONS

Gear Train AX 15 (DDQ)
Figure AX-415

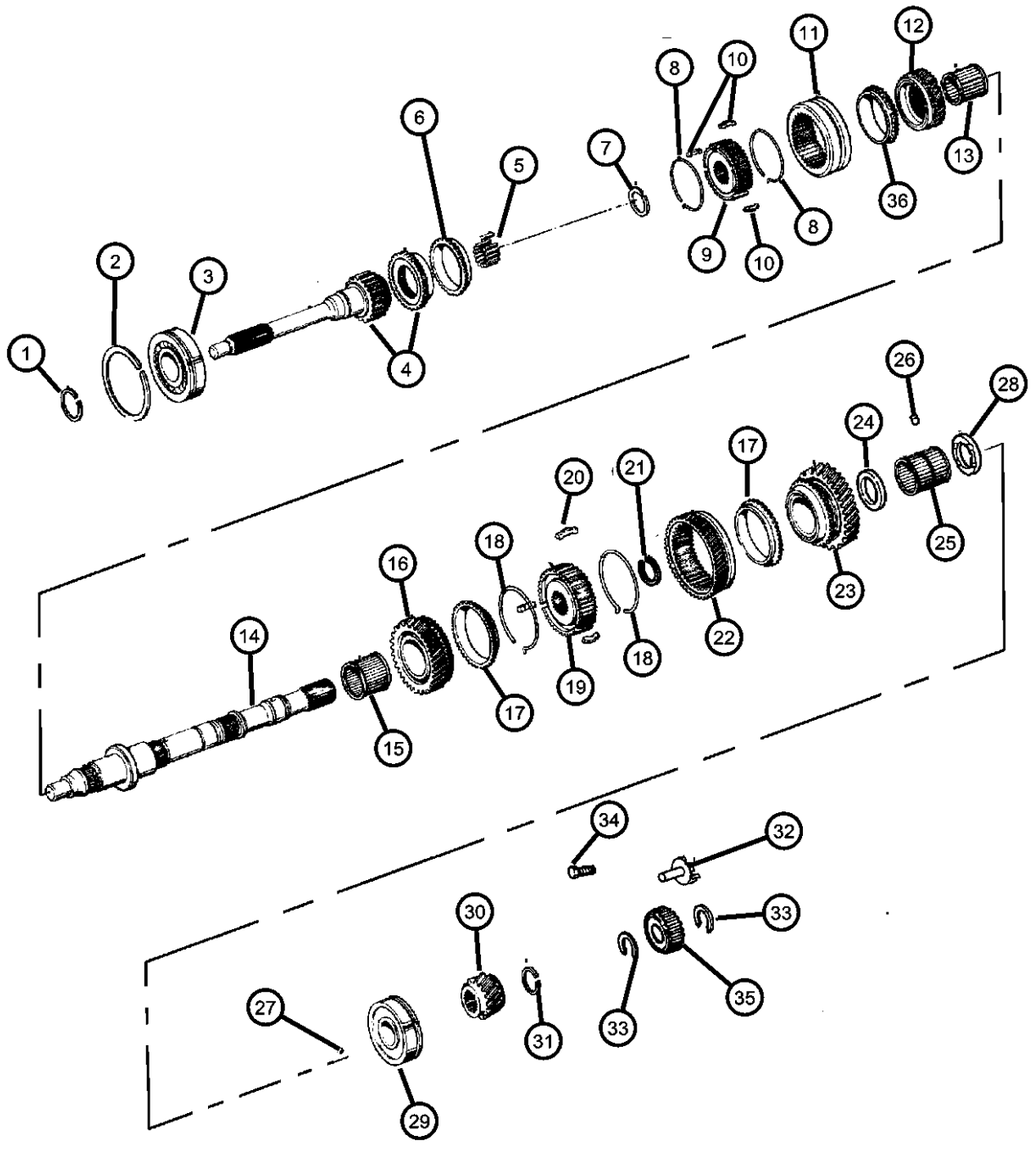

ITEM	PART NUMBER	QTY	LINE	SERIES	BODY	ENGINE	TRANS	TRIM	DESCRIPTION
		1	B, T			ER0	DDQ		Stamped F (X=2.35mm/2.40mm). 52108048AB
		1	J, U			EN0	DDQ		Stamped F (X=2.35mm/2.40mm). 52108121AAB
	83506219	1	B, T			ER0	DDQ		Stamped G (X=2.40mm/2.45mm). 52107749
		1	J, U			EN0	DDQ		Stamped G (X=2.40mm/2.45mm). 52107752
		1	J, U			ER0	DDQ		Stamped G (X=2.40mm/2.45mm). 52108047
		1	J, U			ER0	DDQ		Stamped G (X=2.40mm/2.45mm). 52108047AB
		1	B, T			ER0	DDQ		Stamped G (X=2.40mm/2.45mm). 52108048AB
		1	J, U			EN0	DDQ		Stamped G)X=2.40mm/2.45mm). 5210121AB
2									SNAP RING
	83506222	1	B, T			ER0	DDQ		52107749
		1	J, U			EN0	DDQ		52107752
		1	J, U			ER0	DDQ		52108047
		1	J, U			ER0	DDQ		52108047AB
		1	B, T			ER0	DDQ		52108048AB
		1	J, U			EN0	DDQ		52108121AB
3									BEARING, Input Shaft
	83506074	1	B, T			ER0	DDQ		52107749
		1	J, U			EN0	DDQ		52107752
		1	J, U			ER0	DDQ		52108047
		1	J, U			ER0	DDQ		52108047AB
		1	B, T			ER0	DDQ		52108047AB
		1	J, U			EN0	DDQ		52108121AB
4									INPUT SHAFT, Transmission
	04636370	1	B, T			ER0	DDQ		52107749
		1	J, U			ER0	DDQ		52107047
		1	J, U			EN0	DDQ		52107752

CHEROKEE (XJ)

SERIES	LINE	BODY	ENGINE	TRANSMISSION
L = LOWLINE	T = JEEP - 2WD B = JEEP - 2WD (RHD) J = JEEP - 4WD U = JEEP - 4WD (RHD)	72 = SPORT UTILITY 2-DR 74 = SPORT UTILITY 4-DR	ENC = 2.5L 4 Cyl Turbo Diesel Engine EPB = 2.5L 4 Cylinder Engine EPE = Engine - 2.5L Power Tech I-4 Cyl. ERH = 4.0L Power Tech I-6 Engine	DDQ = 5-Speed Manual Transmission DGS = 4-Speed Automatic AW4 Transmission DGO = ALL AUTOMATIC TRANSMISSIONS DBB = ALL MANUAL TRANSMISSIONS

Gear Train AX 15 (DDQ)
Figure AX-415

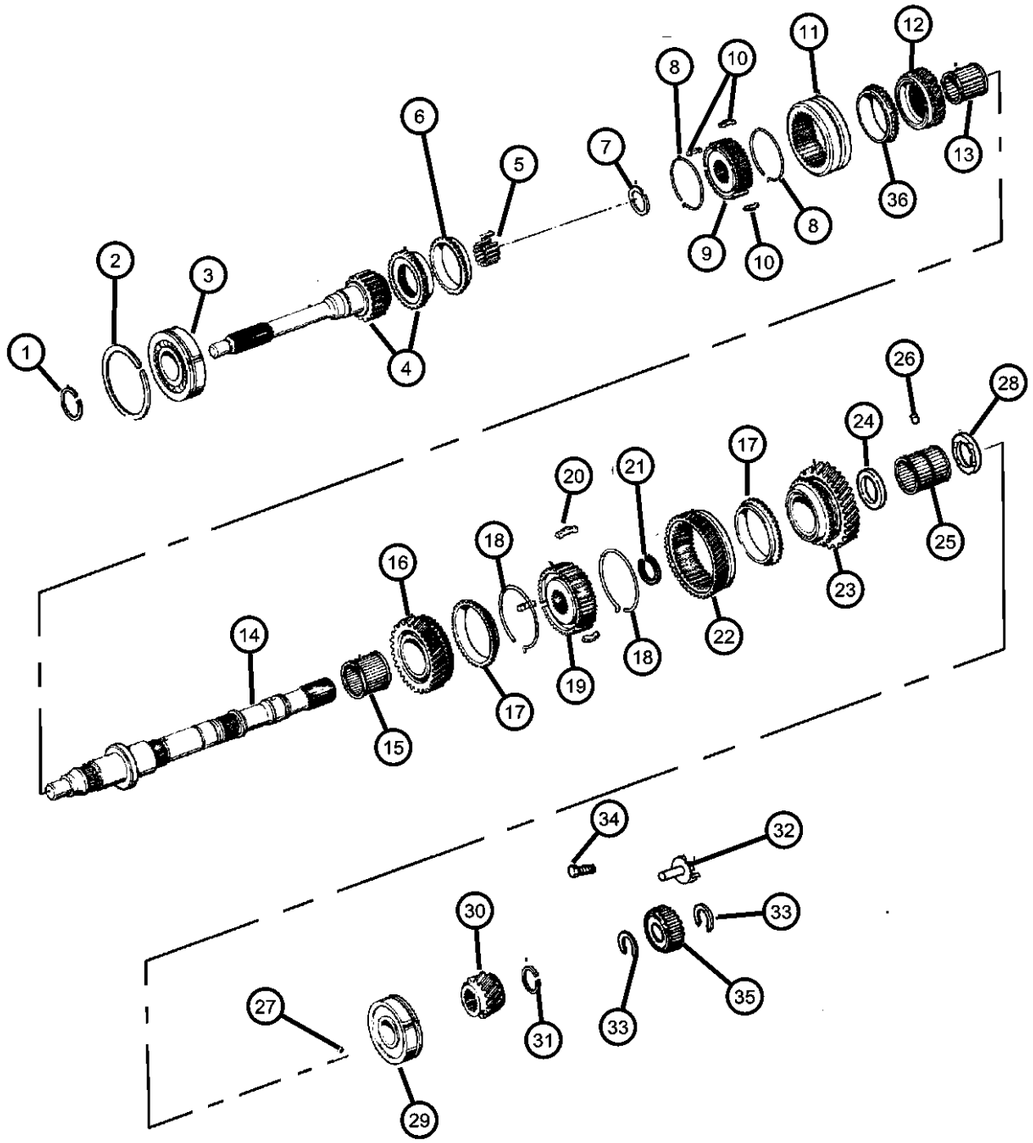

ITEM	PART NUMBER	QTY	LINE	SERIES	BODY	ENGINE	TRANS	TRIM	DESCRIPTION
	04897048AA	1	J, U			ER0	DDQ		52108047AB
		1	B, T			ER0	DDQ		52108048AB
		1	J, U			EN0	DDQ		52108121AB
5									NEEDLE BEARING, Input Shaft
	83506078	1	B, T			ER0	DDQ		52107749
		1	J, U			EN0	DDQ		52107752
		1	J, U			ER0	DDQ		52108047
		1	J, U			ER0	DDQ		52108047AB
		1	B, T			ER0	DDQ		52108048AB
		1	J, U			EN0	DDQ		52108121AB
6									STOP RING, Synchronizer
	04897051AA	1	J, U			ER0	DDQ		Up To 12/12/97
		1	B, T			ER0	DDQ		Up To 12/12/97
		1	J, U			EN0	DDQ		Up To 12/12/97
	04897052AA	1	J, U			ER0	DDQ		After 12/12/97
		1	B, T			ER0	DDQ		After 12/12/98
		1	J, U			EN0	DDQ		After 12/12/98
7									SNAP RING
	83506086	1	B, T			ER0	DDQ		Stamped A (X=1.80mm/1.85mm). 52107749
		1	J, U			EN0	DDQ		Stamped A (X=1.80mm/1.85mm). 52107752
		1	J, U			ER0	DDQ		Satmped A (X=1.80mm/1.85mm). 52108047
		1	J, U			ER0	DDQ		Stamped A (X=1.80mm/1.85mm). 52108047AB
		1	B, T			ER0	DDQ		Stamped A (X=1.80mm/1.85mm). 52108048AB
		1	J, U			EN0	DDQ		Stamped A (X=1.80mm/1.85mm). 52108121AB
	83506087	1	B, T			ER0	DDQ		Stamped B (X=1.85mm/1.90mm). 52107749
		1	J, U			EN0	DDQ		Stamped B (X=1.85mm/1.90mm). 52107752
		1	J, U			ER0	DDQ		Stamped B (X=1.85mm/1.90mm). 52108047

CHEROKEE (XJ)

SERIES	LINE	BODY	ENGINE	TRANSMISSION
L = LOWLINE	T = JEEP - 2WD B = JEEP - 2WD (RHD) J = JEEP - 4WD U = JEEP - 4WD (RHD)	72 = SPORT UTILITY 2-DR 74 = SPORT UTILITY 4-DR	ENC = 2.5L 4 Cyl Turbo Diesel Engine EPB = 2.5L 4 Cylinder Engine EPE = Engine - 2.5L Power Tech I-4 Cyl. ERH = 4.0L Power Tech I-6 Engine	DDQ = 5-Speed Manual Transmission DGS = 4-Speed Automatic AW4 Transmission DGO = ALL AUTOMATIC TRANSMISSIONS DBB = ALL MANUAL TRANSMISSIONS

Gear Train AX 15 (DDQ)
Figure AX-415

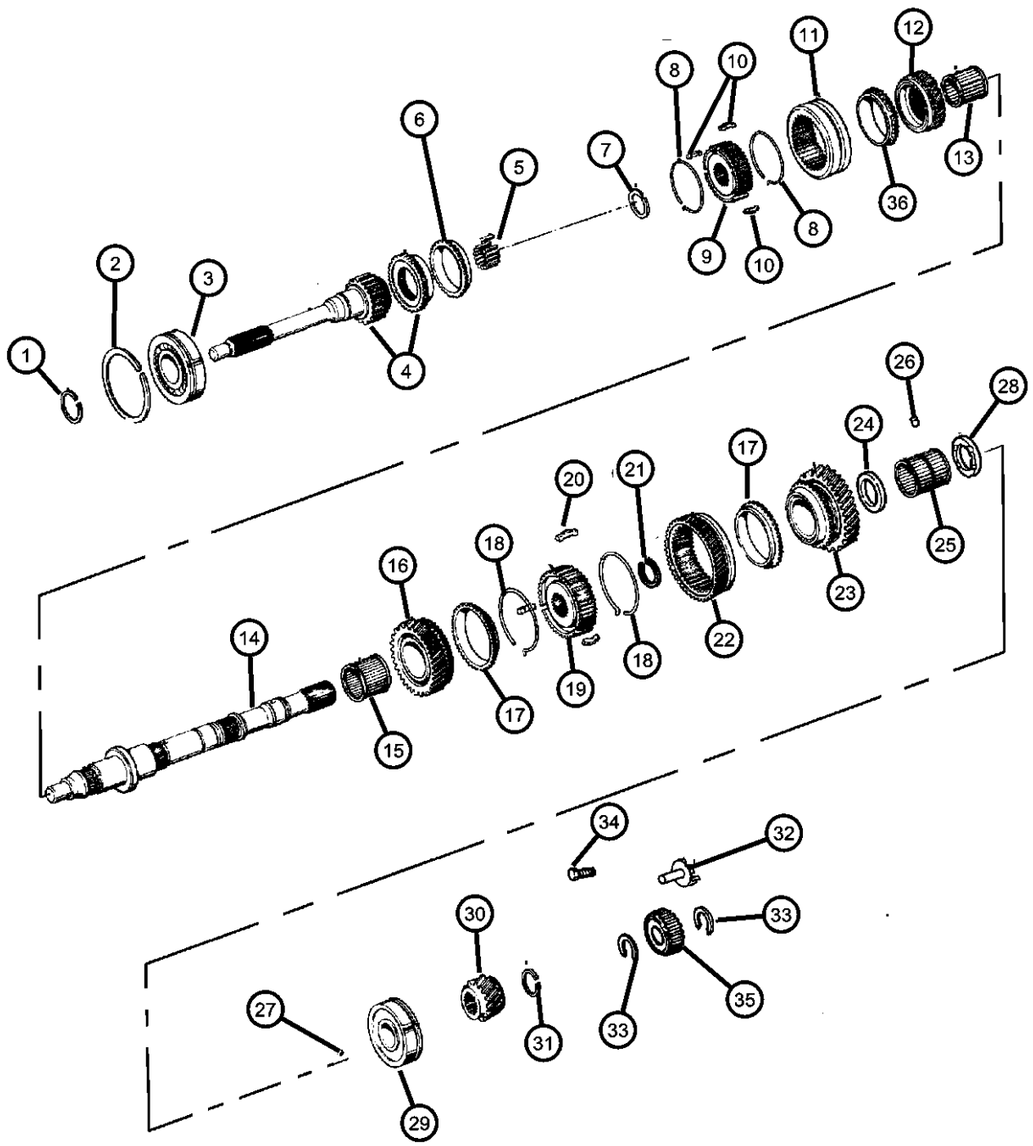

ITEM	PART NUMBER	QTY	LINE	SERIES	BODY	ENGINE	TRANS	TRIM	DESCRIPTION
		1	J, U			ER0	DDQ		Stamped B (X=1.85mm/1.90mm). 52108047AB
		1	B, T			ER0	DDQ		Stamped B (X=1.85mm/190mm). 52108048AB
		1	J, U			EN0	DDQ		Stamped B (X=1.85mm/1.90mm). 52108121AB
	83506088	1	B, T			ER0	DDQ		Stamped C (X=1.90mm/1.95mm). 52107749
		1	J, U			EN0	DDQ		Stamped C (X=1.90mm/1.95mm). 52107752
		1	J, U			ER0	DDQ		Stamped C (X=1.90mm/1.95mm)
		1	J, U			ER0	DDQ		Stamped C (X=1.90mm/1.95mm). 52108047AB
		1	B, T			ER0	DDQ		Stamped C (X-1.90mm/1.95mm). 52108048AB
		1	J, U			EN0	DDQ		Stamped C (X=1.90mm/1.95mm). 52108121AB
	83506089	1	B, T			ER0	DDQ		StampedD (X=1.90mm/2.00mm). 52107749
		1	J, U			EN0	DDQ		Stamped D (X=1.95mm/2.00mm). 52107752
		1	J, U			ER0	DDQ		Satmped D (X=1.95mm/2.00mm). 52108047
		1	J, U			ER0	DDQ		Stamped D (X=1.95mm/2.00mm). 52108047AB
		1	B, T			ER0	DDQ		Stamped D (X=1.95mm/2.00mm). 52108048AB
		1	J, U			EN0	DDQ		Stamped D (X=1.95mm/2.00mm). 52108121AB
	83506090	1	B, T			ER0	DDQ		Stamped E (X=2.00mm/2.05mm). 52107749
		1	J, U			EN0	DDQ		Stamped E (X=2.00mm/2.05mm). 52107752
		1	J, U			ER0	DDQ		Stamped E (X=2.00mm/2.05mm). 52108047
		1	J, U			ER0	DDQ		Stamped E (X=2.00mm/2.05mm). 52108047AB

CHEROKEE (XJ)

SERIES	LINE	BODY	ENGINE	TRANSMISSION
L = LOWLINE	T = JEEP - 2WD B = JEEP - 2WD (RHD) J = JEEP - 4WD U = JEEP - 4WD (RHD)	72 = SPORT UTILITY 2-DR 74 = SPORT UTILITY 4-DR	ENC = 2.5L 4 Cyl Turbo Diesel Engine EPB = 2.5L 4 Cylinder Engine EPE = Engine - 2.5L Power Tech I-4 Cyl. ERH = 4.0L Power Tech I-6 Engine	DDQ = 5-Speed Manual Transmission DGS = 4-Speed Automatic AW4 Transmission DGO = ALL AUTOMATIC TRANSMISSIONS DBB = ALL MANUAL TRANSMISSIONS

Gear Train AX 15 (DDQ)
Figure AX-415

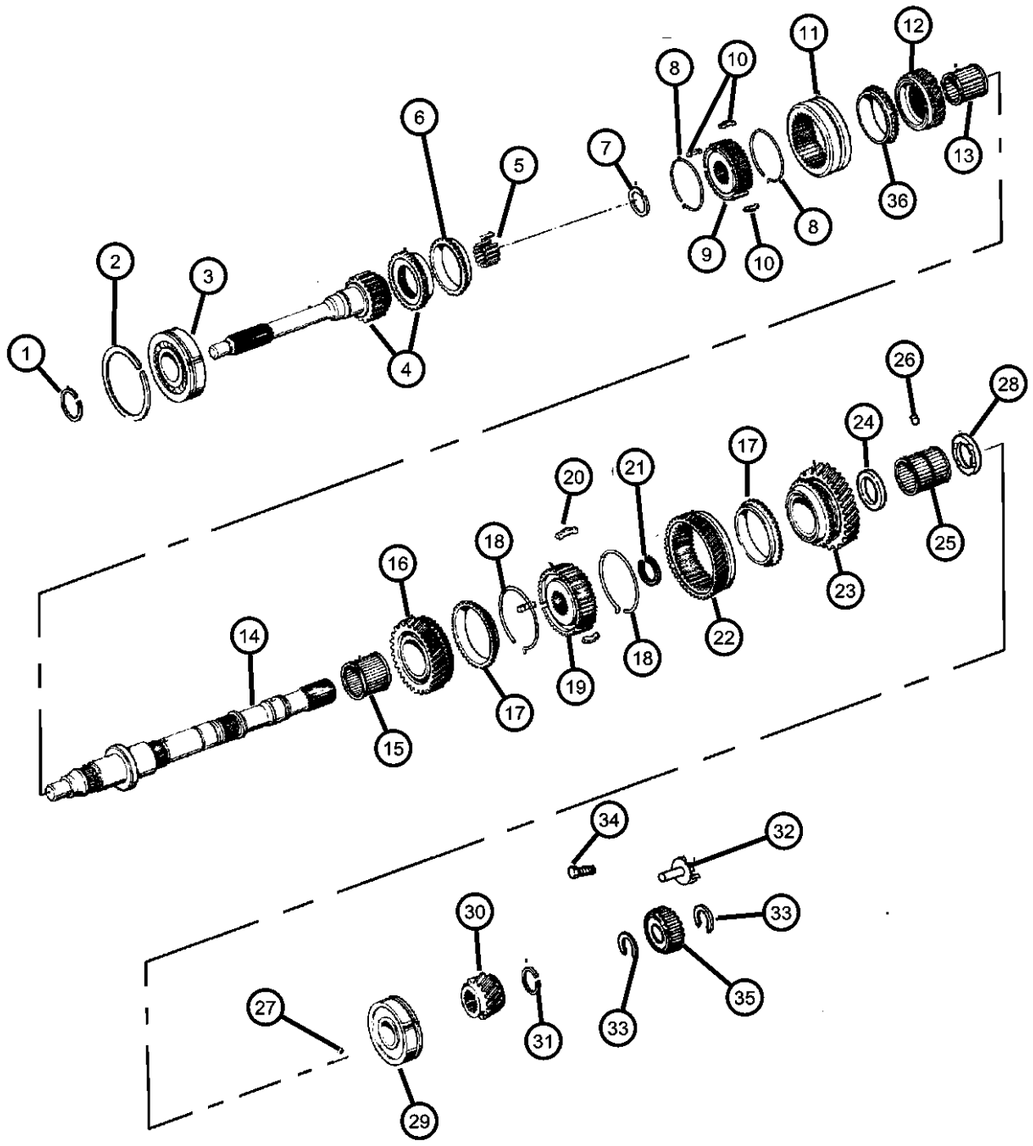

ITEM	PART NUMBER	QTY	LINE	SERIES	BODY	ENGINE	TRANS	TRIM	DESCRIPTION
		1	B, T			ER0	DDQ		Stamped E (X=2.00mm/2.05mm). 52108048AB
		1	J, U			EN0	DDQ		Stamped E (X=2.00mm/2.05mm). 52108121AB
	83506091	1	B, T			ER0	DDQ		Stamped F (X=2.05mm/2.10mm). 52107749
		1	J, U			EN0	DDQ		Stamped F (X=2.05mm/2.10mm). 52108852
		1	J, U			ER0	DDQ		Stamped F (X=2.05mm/2.10mm). 52108047
		1	J, U			ER0	DDQ		Stamped F (X=2.05mm/2.10mm). 52108047AB
		1	B, T			ER0	DDQ		Stamped F (X=2.05mm/2.10mm). 52108048AB
		1	J, U			EN0	DDQ		Stamped F (X=2.05mm/2.10mm). 52108121AB
	83506092	1	B, T			ER0	DDQ		Stamped G (X=2.10mm/2.15mm). 52107749
		1	J, U			EN0	DDQ		Stamped G (X=2.10mm/2.15mm). 52107752
		1	J, U			ER0	DDQ		Stamped G (X=2.10mm/2.15mm).52108047
		1	J, U			ER0	DDQ		Stamped G (X=2.10mm/2.15mm). 52108047AB
		1	B, T			ER0	DDQ		Stamped G (X=2.10mm/2.15mm). 52108048AB
		1	J, U			EN0	DDQ		Stamped G (X=2.10mm/2.15mm). 52108121AB
8									SPRING, Synchronizer Key
	83506255	2	B, T			ER0	DDQ		52107749
		2	J, U			EN0	DDQ		52107752
		2	J, U			ER0	DDQ		52108047
		2	J, U			ER0	DDQ		52108047AB
		2	B, T			ER0			52108048AB
		2	J, U			EN0	DDQ		52108121AB

CHEROKEE (XJ)

SERIES	LINE	BODY	ENGINE	TRANSMISSION
L = LOWLINE	T = JEEP - 2WD B = JEEP - 2WD (RHD) J = JEEP - 4WD U = JEEP - 4WD (RHD)	72 = SPORT UTILITY 2-DR 74 = SPORT UTILITY 4-DR	ENC = 2.5L 4 Cyl Turbo Diesel Engine EPB = 2.5L 4 Cylinder Engine EPE = Engine - 2.5L Power Tech I-4 Cyl. ERH = 4.0L Power Tech I-6 Engine	DDQ = 5-Speed Manual Transmission DGS = 4-Speed Automatic AW4 Transmission DGO = ALL AUTOMATIC TRANSMISSIONS DBB = ALL MANUAL TRANSMISSIONS

Gear Train AX 15 (DDQ)
Figure AX-415

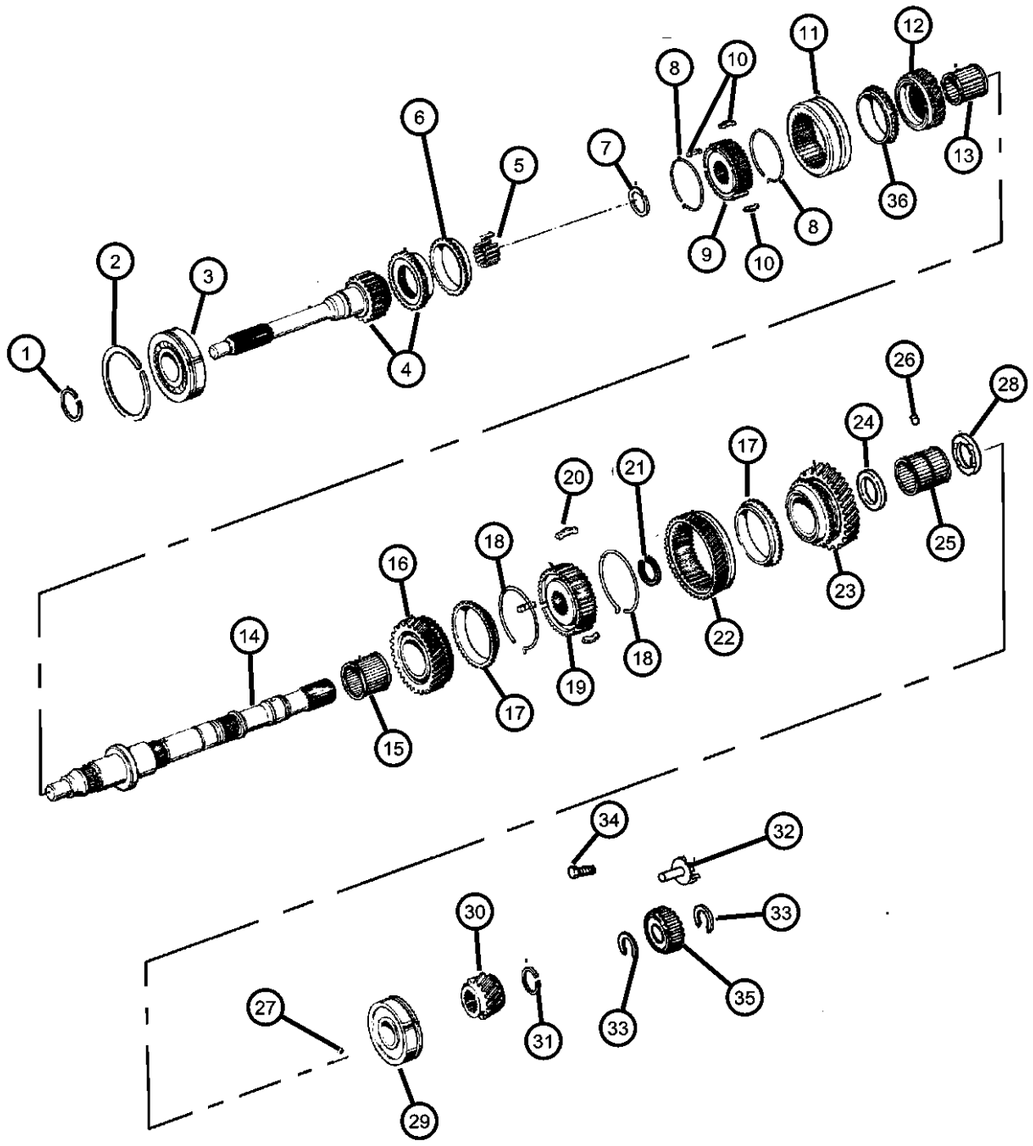

ITEM	PART NUMBER	QTY	LINE	SERIES	BODY	ENGINE	TRANS	TRIM	DESCRIPTION
9									HUB, Synchronizer
	83506248	1	B, T			ER0	DDQ		52107749
		1	J, U			EN0	DDQ		52107752
		1	J, U			ER0	DDQ		52108047
		1	J, U			ER0	DDQ		52108047AB
		1	B, T			ER0	DDQ		52108048AB
		1	J, U			EN0	DDQ		52108121AB
10									KEY, Synchronizer
	83506251	3	B, T			ER0	DDQ		52107749
		3	J, U			EN0	DDQ		52107752
		3	J, U			ER0	DDQ		52108047
		3	J, U			ER0	DDQ		52108047AB
		3	B, T			ER0			52108048AB
		3	J, U			EN0	DDQ		52108121AB
11									SLEEVE, Synchronizer
	04897050AA	1	J, U			ER0	DDQ		52108047AB
		1	B, T			ER0	DDQ		52108048AB
		1	J, U			EN0	DDQ		52108121AB
	83506249	1	B, T			ER0	DDQ		52107749
		1	J, U			EN0	DDQ		52107752
		1	J, U			ER0	DDQ		52108047
12									GEAR, Third
	04897047AA	1	J, U			ER0	DDQ		52108047AB
		1	B, T			ER0	DDQ		52108048AB
		1	J, U			EN0	DDQ		52108121AB
	05252079	1	B, T			ER0	DDQ		52107749
		1	J, U			EN0	DDQ		52107752
		1	J, U			ER0	DDQ		52108047
13									NEEDLE BEARING, Third Gear
	83506077	1	B, T			ER0	DDQ		52107749
		1	J, U			EN0	DDQ		52107752
		1	J, U			ER0	DDQ		52108047
		1	J, U			ER0	DDQ		52108047AB

CHEROKEE (XJ)

SERIES	LINE	BODY	ENGINE	TRANSMISSION
L = LOWLINE	T = JEEP - 2WD B = JEEP - 2WD (RHD) J = JEEP - 4WD U = JEEP - 4WD (RHD)	72 = SPORT UTILITY 2-DR 74 = SPORT UTILITY 4-DR	ENC = 2.5L 4 Cyl Turbo Diesel Engine EPB = 2.5L 4 Cylinder Engine EPE = Engine - 2.5L Power Tech I-4 Cyl. ERH = 4.0L Power Tech I-6 Engine	DDQ = 5-Speed Manual Transmission DGS = 4-Speed Automatic AW4 Transmission DGO = ALL AUTOMATIC TRANSMISSIONS DBB = ALL MANUAL TRANSMISSIONS

AR = use ase required - = Non illustrrated part

Gear Train AX 15 (DDQ)
Figure AX-415

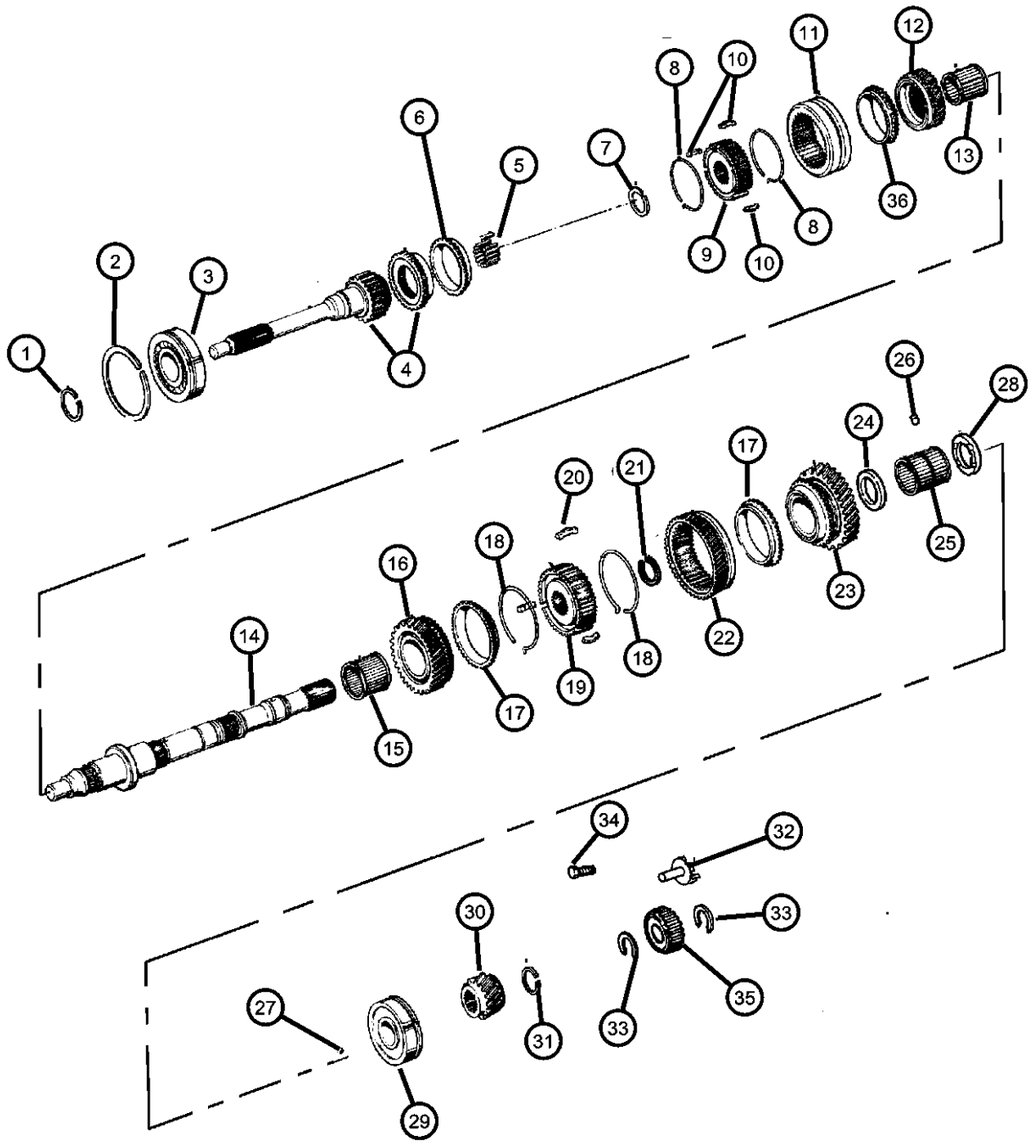

ITEM	PART NUMBER	QTY	LINE	SERIES	BODY	ENGINE	TRANS	TRIM	DESCRIPTION
		1	B, T			ER0	DDQ		52108048AB
		1	J, U			EN0	DDQ		52108121AB
14									SHAFT, Output
	04874288	1	B, T			ER0	DDQ		52107749
		1	B, T			ER0	DDQ		52108048AB
	83506243	1	J, U			EN0	DDQ		52107752
		1	J, U			ER0	DDQ		52108047
		1	J, U			ER0	DDQ		52108047AB
		1	J, U			EN0	DDQ		52108121AB
15									NEEDLE BEARING, Second Gear
	83506076	1	B, T			ER0	DDQ		52107749
		1	J, U			EN0	DDQ		52107752
		1	J, U			ER0	DDQ		52108047
		1	J, U			ER0	DDQ		52108047AB
		1	B, T			ER0	DDQ		52108048AB
		1	J, U			EN0	DDQ		52108121AB
16									GEAR, Second
	04636369	1	B, T			ER0	DDQ		52107749
		1	J, U			ER0	DDQ		52108047
		1	J, U			ER0	DDQ		52108047AB
		1	B, T			ER0	DDQ		52108048AB
		1	J, U			EN0	DDQ		52108121AB
		1	J, U			EN0	DDQ		52107752
17									STOP RING, Synchronizer
	83506252	2	B, T			ER0	DDQ		52107749
		2	J, U			EN0	DDQ		52107752
		2	J, U			ER0	DDQ		52108047
		2	J, U			ER0	DDQ		52108047AB
		2	B, T			ER0			52108048AB
		2	J, U			EN0	DDQ		52108121AB
18									SPRING, Synchronizer Key
	83506254	2	B, T			ER0	DDQ		52107749
		2	J, U			EN0	DDQ		52107752

CHEROKEE (XJ)

SERIES	LINE	BODY	ENGINE	TRANSMISSION
L = LOWLINE	T = JEEP - 2WD B = JEEP - 2WD (RHD) J = JEEP - 4WD U = JEEP - 4WD (RHD)	72 = SPORT UTILITY 2-DR 74 = SPORT UTILITY 4-DR	ENC = 2.5L 4 Cyl Turbo Diesel Engine EPB = 2.5L 4 Cylinder Engine EPE = Engine - 2.5L Power Tech I-4 Cyl. ERH = 4.0L Power Tech I-6 Engine	DDQ = 5-Speed Manual Transmission DGS = 4-Speed Automatic AW4 Transmission DGO = ALL AUTOMATIC TRANSMISSIONS DBB = ALL MANUAL TRANSMISSIONS

AR = use ase required - = Non illustrrated part

Gear Train AX 15 (DDQ)
Figure AX-415

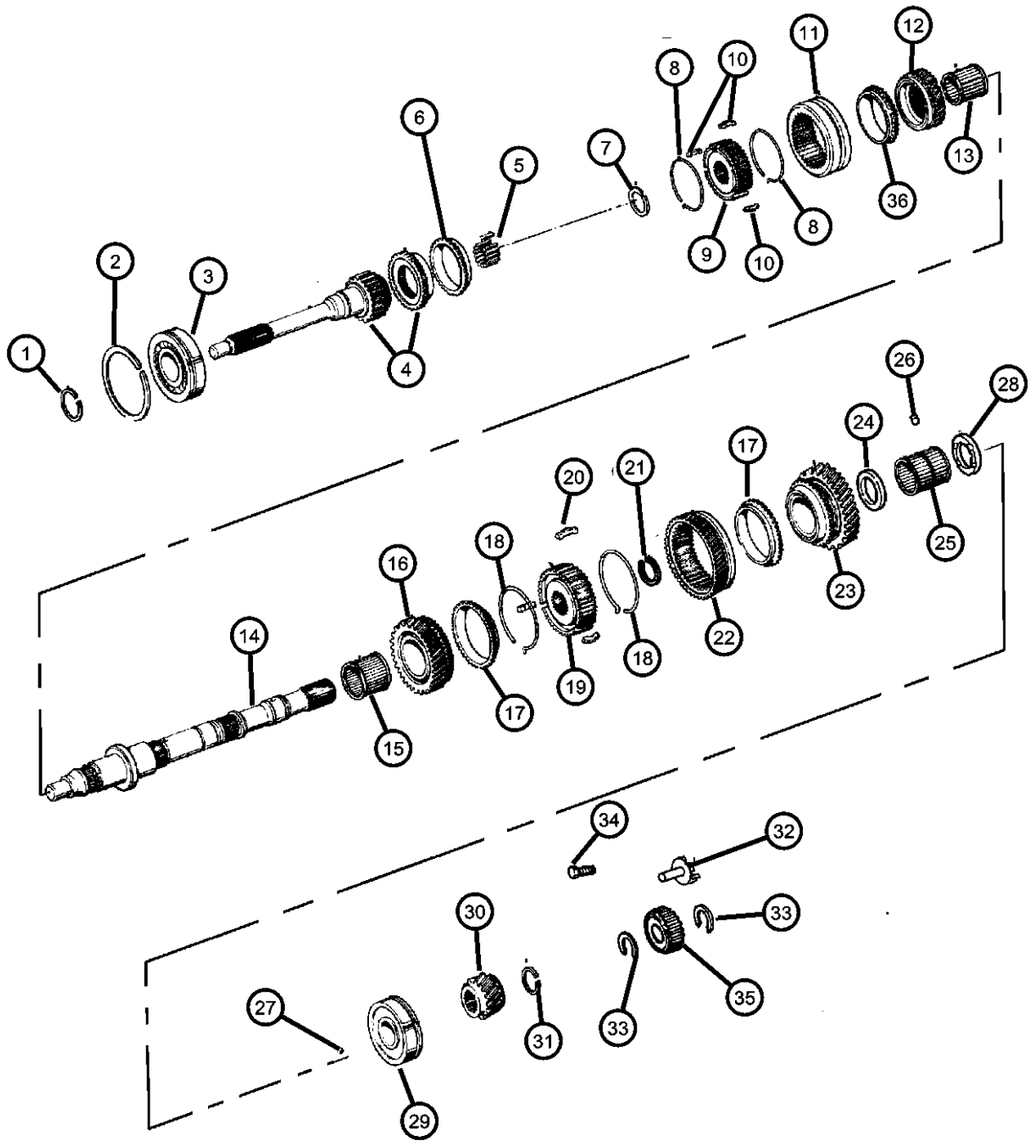

ITEM	PART NUMBER	QTY	LINE	SERIES	BODY	ENGINE	TRANS	TRIM	DESCRIPTION
		2	J, U			ER0	DDQ		52108047
		2	J, U			ER0	DDQ		52108047AB
		2	B, T			ER0			52108048AB
		2	J, U			EN0	DDQ		52108121AB
19									HUB, Synchronizer
	83506247	1	B, T			ER0	DDQ		52107749
		1	J, U			EN0	DDQ		52107752
		1	J, U			ER0	DDQ		52108047
		1	J, U			ER0	DDQ		52108047AB
		1	B, T			ER0	DDQ		52108048AB
		1	J, U			EN0	DDQ		52108121AB
20									KEY, Synchronizer
	83506250	3	B, T			ER0	DDQ		52107749
		3	J, U			EN0	DDQ		52107752
		3	J, U			ER0	DDQ		52108047
		3	J, U			ER0	DDQ		52108047AB
		3	B, T			ER0			52108048AB
		3	J, U			EN0	DDQ		52108121AB
21									SNAP RING
	83506093	1	B, T			ER0	DDQ		Stamped B (X=2.35mm/2.40mm). 52107749
		1	J, U			EN0	DDQ		Stamped B (X=2.35mm/2.40mm). 52107752
		1	J, U			ER0	DDQ		Stamped B (X=2.35mm/2,40mm). 52108047
		1	J, U			ER0	DDQ		Stamped B (X=2.35mm/2.40mm). 52108047AB
		1	B, T			ER0	DDQ		Stamped B (X=2.35mm/2.40mm). 52108048AB
		1	J, U			EN0	DDQ		Stamped B (X=2.35mm/2.40mm). 52108121AB
	83506094	1	B, T			ER0	DDQ		Stamped C (X=2.40mm/2.45mm). 52107749
		1	J, U			EN0	DDQ		Stamped C (X=2.40mm/2.25mm). 52107752

CHEROKEE (XJ)

SERIES	LINE	BODY	ENGINE	TRANSMISSION
L = LOWLINE	T = JEEP - 2WD B = JEEP - 2WD (RHD) J = JEEP - 4WD U = JEEP - 4WD (RHD)	72 = SPORT UTILITY 2-DR 74 = SPORT UTILITY 4-DR	ENC = 2.5L 4 Cyl Turbo Diesel Engine EPB = 2.5L 4 Cylinder Engine EPE = Engine - 2.5L Power Tech I-4 Cyl. ERH = 4.0L Power Tech I-6 Engine	DDQ = 5-Speed Manual Transmission DGS = 4-Speed Automatic AW4 Transmission DGO = ALL AUTOMATIC TRANSMISSIONS DBB = ALL MANUAL TRANSMISSIONS

Gear Train AX 15 (DDQ)
Figure AX-415

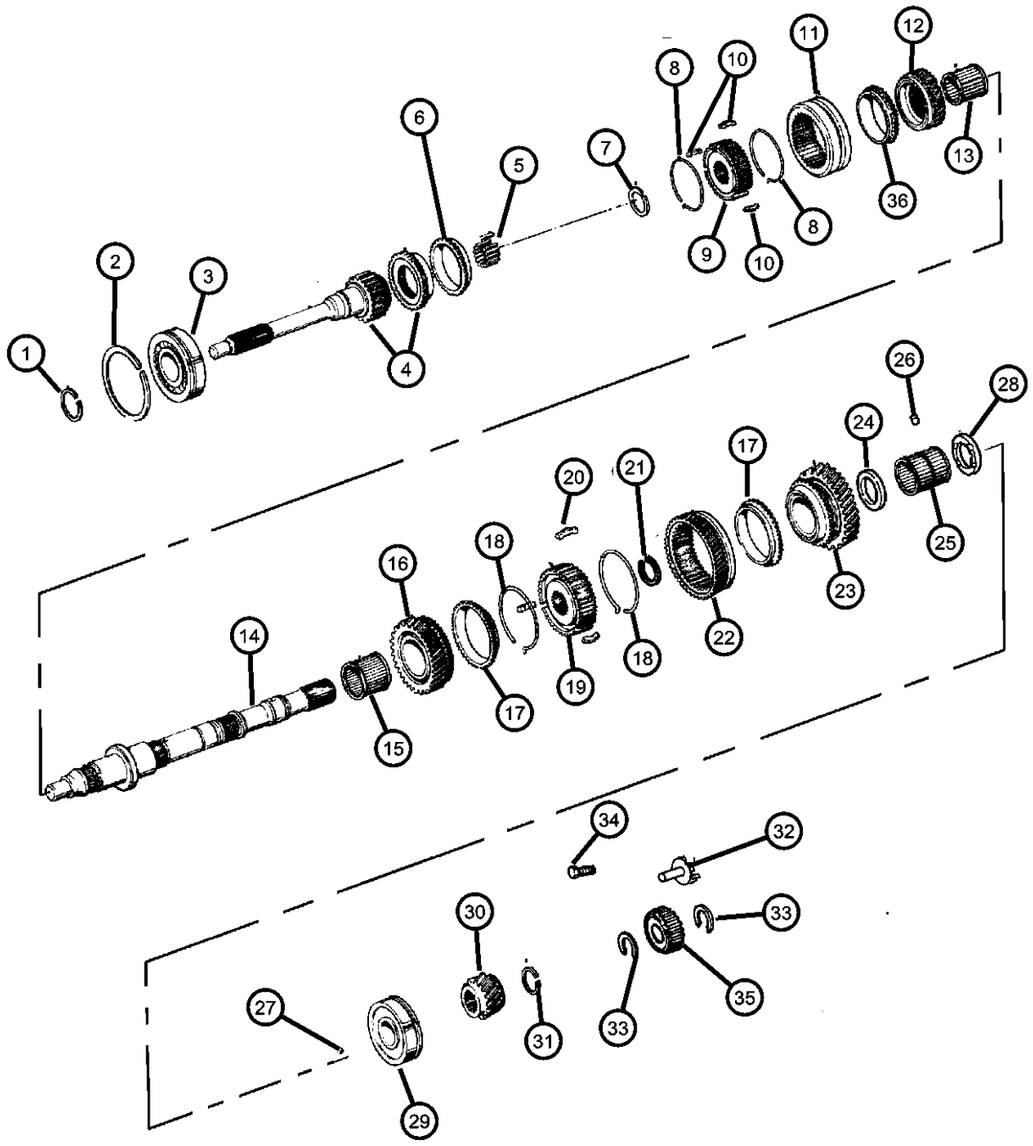

ITEM	PART NUMBER	QTY	LINE	SERIES	BODY	ENGINE	TRANS	TRIM	DESCRIPTION
		1	J, U			ER0	DDQ		Stamped C (X=2.40mm/2.45mm). 52108047
		1	B, T			ER0	DDQ		Stamped C (X=2.40mm/2.45mm). 52108048AB
		1	J, U			EN0	DDQ		Stamped C (X=2.40mm/2.45mm). 521081212AB
	83506095	1	B, T			ER0	DDQ		Stamped D (X=2.45mm/2.50mm). 52107749
		1	J, U			EN0	DDQ		Stamped D (X=2.45mm/2.50mm). 52107752
		1	J, U			ER0	DDQ		Stamped D (X=2.45mm/2.50mm). 52108047
		1	J, U			ER0	DDQ		Stamped D (X=2.45mm/2.50mm). 52108047AB
		1	B, T			ER0	DDQ		Stamped D (X=2.45mm/2.50mm). 52108048AB
		1	J, U			EN0	DDQ		Stamped D (X=2.45mm/2.50mm). 52108121AB
	83506096	1	B, T			ER0	DDQ		Stamped E (X=2.50mm/2.55mm). 52107749
		1	J, U			EN0	DDQ		Stamped E (X=2.50mm/2.55mm. 52107752
		1	J, U			ER0	DDQ		Stamped E (X=2.50mm/2.55mm). 52108047
		1	J, U			ER0	DDQ		Stamped E (X=2.50mm/2.55mm). 52108047AB
		1	B, T			ER0	DDQ		Stamped E (X=2.50mm/2.55mm). 52108048AB
		1	J, U			EN0	DDQ		Stamped E (X=2.50mm/2.55mm). 5210181AB
	83506097	1	B, T			ER0	DDQ		Stamped F (X=2.55mm/2.60mm). 52107749
		1	J, U			EN0	DDQ		Stamped F (X=2.55mm/2.60mm)52107752
		1	J, U			ER0	DDQ		Stamped F (X=2.55mm/2.60mm). 52108047

CHEROKEE (XJ)

SERIES	LINE	BODY	ENGINE	TRANSMISSION
L = LOWLINE	T = JEEP - 2WD B = JEEP - 2WD (RHD) J = JEEP - 4WD U = JEEP - 4WD (RHD)	72 = SPORT UTILITY 2-DR 74 = SPORT UTILITY 4-DR	ENC = 2.5L 4 Cyl Turbo Diesel Engine EPB = 2.5L 4 Cylinder Engine EPE = Engine - 2.5L Power Tech I-4 Cyl. ERH = 4.0L Power Tech I-6 Engine	DDQ = 5-Speed Manual Transmission DGS = 4-Speed Automatic AW4 Transmission DGO = ALL AUTOMATIC TRANSMISSIONS DBB = ALL MANUAL TRANSMISSIONS

Gear Train AX 15 (DDQ)
Figure AX-415

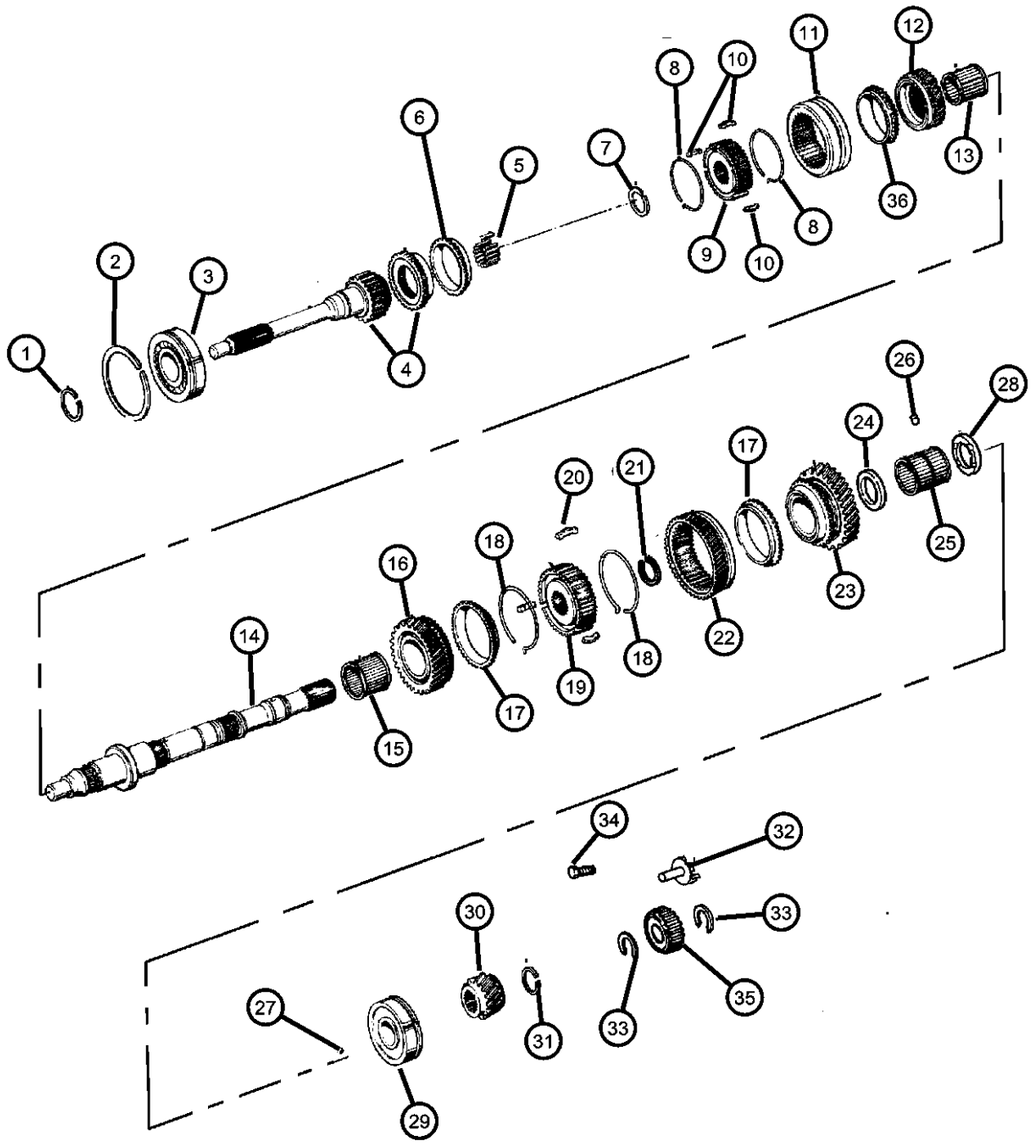

ITEM	PART NUMBER	QTY	LINE	SERIES	BODY	ENGINE	TRANS	TRIM	DESCRIPTION
		1	J, U			ER0	DDQ		Stamped F (X=2.55mm/2.60mm). 52108047AB
		1	B, T			ER0	DDQ		Stamped F (X=2.55mm/2.60mm). 52108048AB
		1	J, U			EN0	DDQ		Stamped F (X=2.55mm/2.60mm). 52108121AB
	83506098	1	B, T			ER0	DDQ		Stamped G (X=2.60mm.2.65mm). 52107749
		1	J, U			EN0	DDQ		Stamped G (X=2.60mm/2.65mm). 52107752
		1	J, U			ER0	DDQ		Stamped G (X=2.60mm/2.65mm). 52108047
		1	J, U			ER0	DDQ		Stamped G (X=2.60mm/2.65mm). 52108047AB
		1	B, T			ER0	DDQ		Stamped G (X=2.60mm/2.65mm). 52108048AB
		1	J, U			EN0	DDQ		Stamped G (X=2.60mm/2.65mm). 52108121AB
22									GEAR, Reverse
	05252082	1	B, T			ER0	DDQ		52107749
		1	J, U			EN0	DDQ		52107752
		1	J, U			ER0	DDQ		52108047
		1	J, U			ER0	DDQ		52108047AB
		1	B, T			ER0	DDQ		52108048AB
		1	J, U			EN0	DDQ		52108121AB
23									GEAR, First
	04636368	1	B, T			ER0	DDQ		52107749
		1	J, U			ER0	DDQ		52108047
		1	J, U			ER0	DDQ		52108047AB
		1	B, T			ER0	DDQ		52108048AB
	04796002	1	J, U			EN0	DDQ		52107752
		1	J, U			EN0	DDQ		52108121AB
24									SPACER, Output Shaft
	83506280	1	B, T			ER0	DDQ		52107749

CHEROKEE (XJ)

SERIES	LINE	BODY	ENGINE	TRANSMISSION
L = LOWLINE	T = JEEP - 2WD B = JEEP - 2WD (RHD) J = JEEP - 4WD U = JEEP - 4WD (RHD)	72 = SPORT UTILITY 2-DR 74 = SPORT UTILITY 4-DR	ENC = 2.5L 4 Cyl Turbo Diesel Engine EPB = 2.5L 4 Cylinder Engine EPE = Engine - 2.5L Power Tech I-4 Cyl. ERH = 4.0L Power Tech I-6 Engine	DDQ = 5-Speed Manual Transmission DGS = 4-Speed Automatic AW4 Transmission DGO = ALL AUTOMATIC TRANSMISSIONS DBB = ALL MANUAL TRANSMISSIONS

Gear Train AX 15 (DDQ)
Figure AX-415

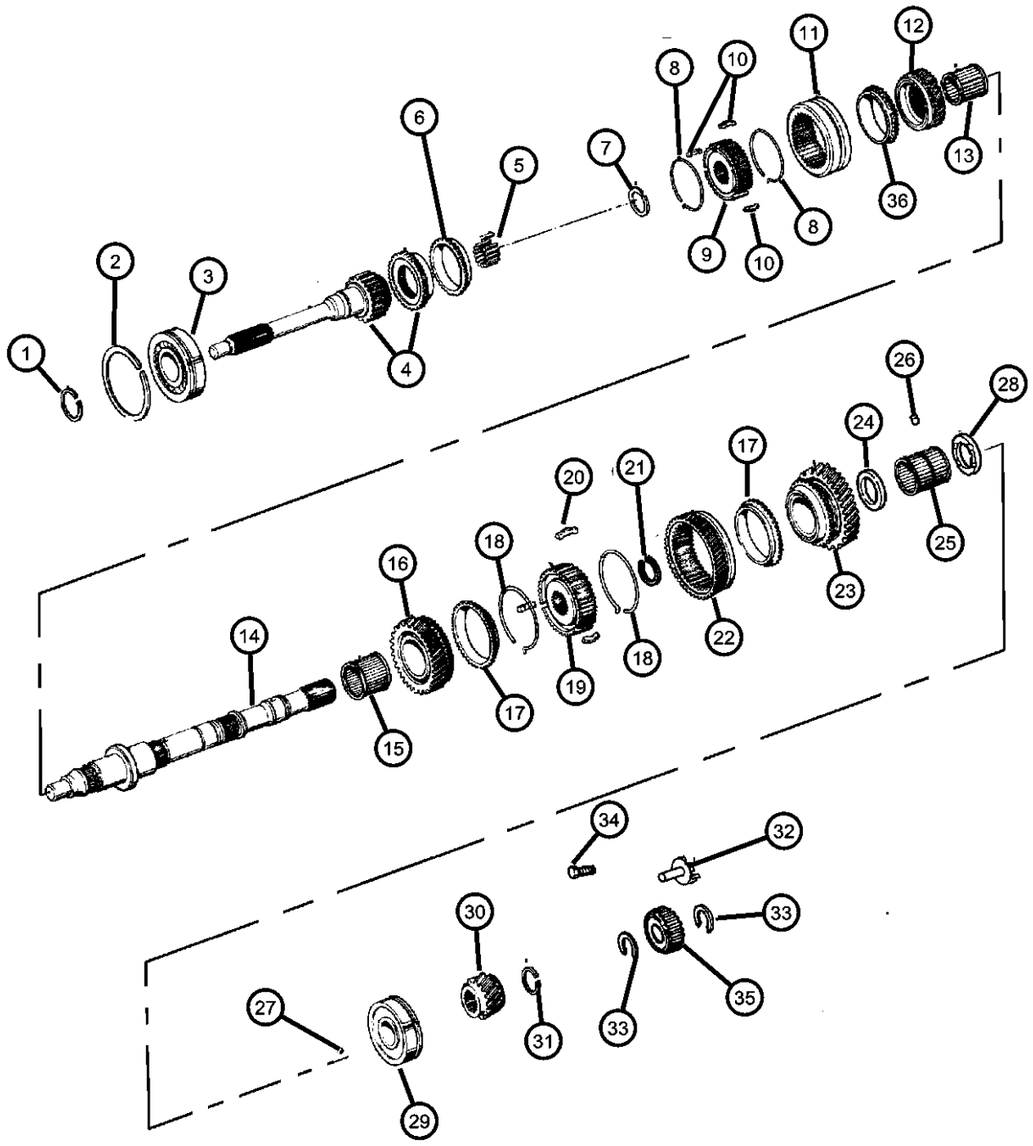

ITEM	PART NUMBER	QTY	LINE	SERIES	BODY	ENGINE	TRANS	TRIM	DESCRIPTION
		1	J, U			EN0	DDQ		52107752
		1	J, U			ER0	DDQ		52108047
		1	J, U			ER0	DDQ		521058047AB
		1	B, T			ER0	DDQ		52108048AB
		1	J, U			EN0	DDQ		52108121AB
25									NEEDLE BEARING, First Gear
	83506075	1	B, T			ER0	DDQ		52107749
		1	J, U			EN0	DDQ		52107752
		1	J, U			ER0	DDQ		52108047
		1	J, U			ER0	DDQ		52108047AB
		1	B, T			ER0	DDQ		52108048AB
		1	J, U			EN0	DDQ		52108121AB
26									PIN, Mainshaft
	83506008	1	B, T			ER0	DDQ		52107749
		1	J, U			EN0	DDQ		52107752
		1	J, U			ER0	DDQ		52108047
		1	J, U			ER0	DDQ		52108047AB
		1	B, T			ER0	DDQ		52108048AB
		1	J, U			EN0	DDQ		52108121AB
27									BALL, Reverse
	83500573	1	B, T			ER0	DDQ		52107749
		1	J, U			EN0	DDQ		52107752
		1	J, U			ER0	DDQ		52108047
		1	J, U			ER0	DDQ		52108047AB
		1	J, U			EN0	DDQ		52108121AB
		1	B, T			ER0	DDQ		52108048AB
28									THRUST WASHER, First Gear
	83506246	1	B, T			ER0	DDQ		52107749
		1	J, U			ER0	DDQ		52108047
		1	J, U			ER0	DDQ		52108047AB
		1	B, T			ER0	DDQ		52108048AB
		1	J, U			EN0	DDQ		52108121AB
29									BEARING, Output Shaft

CHEROKEE (XJ)

SERIES	LINE	BODY	ENGINE	TRANSMISSION
L = LOWLINE	T = JEEP - 2WD B = JEEP - 2WD (RHD) J = JEEP - 4WD U = JEEP - 4WD (RHD)	72 = SPORT UTILITY 2-DR 74 = SPORT UTILITY 4-DR	ENC = 2.5L 4 Cyl Turbo Diesel Engine EPB = 2.5L 4 Cylinder Engine EPE = Engine - 2.5L Power Tech I-4 Cyl. ERH = 4.0L Power Tech I-6 Engine	DDQ = 5-Speed Manual Transmission DGS = 4-Speed Automatic AW4 Transmission DGO = ALL AUTOMATIC TRANSMISSIONS DBB = ALL MANUAL TRANSMISSIONS

AR = use ase required - = Non illustrrated part

Gear Train AX 15 (DDQ)
Figure AX-415

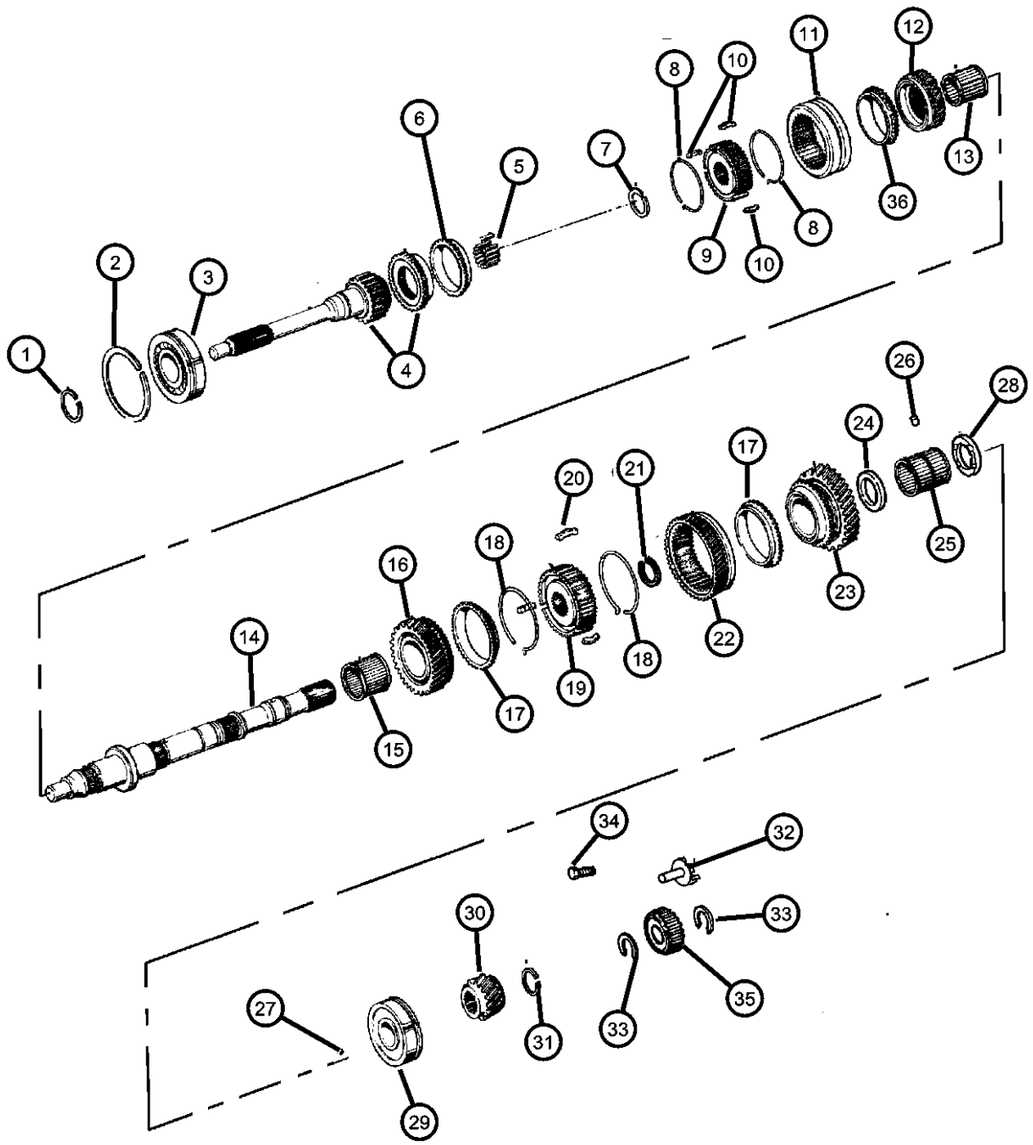

ITEM	PART NUMBER	QTY	LINE	SERIES	BODY	ENGINE	TRANS	TRIM	DESCRIPTION
	83506073	1	B, T			ER0	DDQ		52107749
		1	J, U			EN0	DDQ		52107752
		1	J, U			ER0	DDQ		52108047
		1	J, U			ER0	DDQ		52108047AB
		1	B, T			ER0	DDQ		52108048AB
		1	J, U			EN0	DDQ		52108121AB
30									GEAR, Fifth
	05252083	1	B, T			ER0	DDQ		52107749
		1	J, U			EN0	DDQ		52107752
		1	J, U			ER0	DDQ		52108047
		1	J, U			ER0	DDQ		52108047AB
		1	B, T			ER0	DDQ		52108048AB
		1	J, U			EN0	DDQ		52108121AB
31									SNAP RING
	83506268	1	B, T			ER0	DDQ		Stamped A (X=2.75mm/2.80mm). 52107749
		1	J, U			EN0	DDQ		Stamped A (X=2.75mm/2.80mm). 52107752
		1	J, U			ER0	DDQ		Stamped A (X=2.75mm/2.80mm). 52108047
		1	J, U			ER0	DDQ		Stamped A (X=2.75mm/2.80mm). 52108047AB
		1	B, T			ER0	DDQ		Stamped A (X=2.75mm/2.80mm). 52108048AB
		1	J, U			EN0	DDQ		Stamped A (X=2.75mm/2.80mm). 52108121AB
	83506269	1	B, T			ER0	DDQ		Stamped B (X=2.80mm/2.85mm). 52107749
		1	J, U			EN0	DDQ		Stamped B (X=2.80mm/2.85mm). 52107752
		1	J, U			ER0	DDQ		Stamped B (X-2,80mm/2.85mm). 52108047
		1	J, U			ER0	DDQ		Stamped B (X=2.80mm/2.85mm). 52108047AB

CHEROKEE (XJ)

SERIES	LINE	BODY	ENGINE	TRANSMISSION
L = LOWLINE	T = JEEP - 2WD B = JEEP - 2WD (RHD) J = JEEP - 4WD U = JEEP - 4WD (RHD)	72 = SPORT UTILITY 2-DR 74 = SPORT UTILITY 4-DR	ENC = 2.5L 4 Cyl Turbo Diesel Engine EPB = 2.5L 4 Cylinder Engine EPE = Engine - 2.5L Power Tech I-4 Cyl. ERH = 4.0L Power Tech I-6 Engine	DDQ = 5-Speed Manual Transmission DGS = 4-Speed Automatic AW4 Transmission DGO = ALL AUTOMATIC TRANSMISSIONS DBB = ALL MANUAL TRANSMISSIONS

Gear Train AX 15 (DDQ)
Figure AX-415

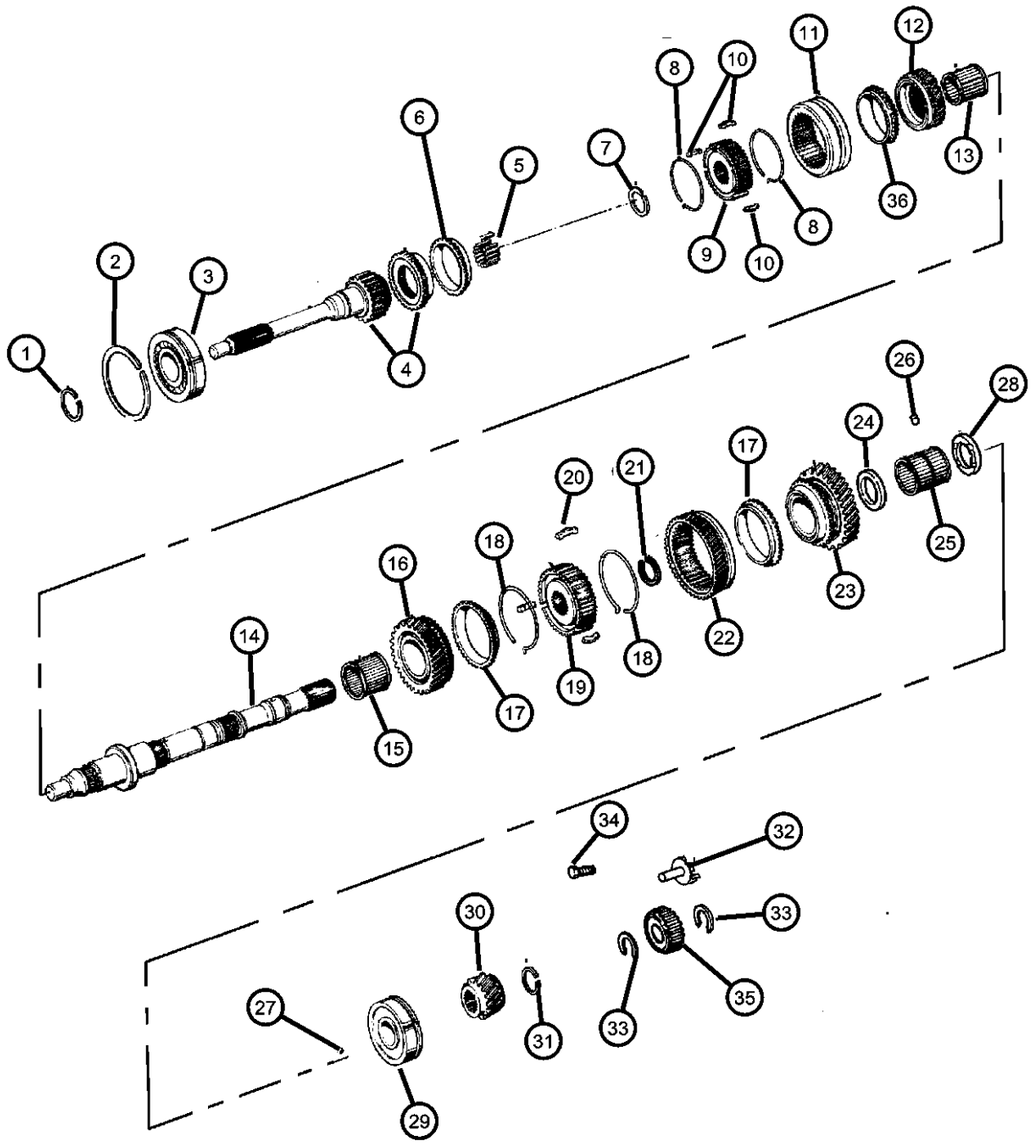

ITEM	PART NUMBER	QTY	LINE	SERIES	BODY	ENGINE	TRANS	TRIM	DESCRIPTION
		1	B, T			ER0	DDQ		Stamped B (X=2.80mm/2.85mm). 52108048AB
		1	J, U			EN0	DDQ		Stamped B)X=2.80mm/2.85mm). 52108121AB
	83506270	1	B, T			ER0	DDQ		Stamped C (X=2.85mm/2.90mm). 52107749
		1	J, U			EN0	DDQ		Stamped C (X=2.85mm/2.90mm). 52107752
		1	J, U			ER0	DDQ		Stamped C (X-2.85mm/2.90mm). 52108047
		1	J, U			ER0	DDQ		Stamped C (X=2.85mm/2.90mm). 52108047AB
		1	B, T			ER0	DDQ		Stamped C (X=2.85mm/2.90mm). 52108048AB
		1	J, U			EN0	DDQ		Stamped C (X=2.85mm/2.90mm). 52108121AB
	83506271	1	B, T			ER0	DDQ		Stamped D (X=2.90mm/2.95mm). 52107749
		1	J, U			EN0	DDQ		Stamped D (X=2.90mm/2.95mm). 52107752
		1	J, U			ER0	DDQ		Stamped D (X=2.90mm/2.95mm). 52108047
		1	J, U			ER0	DDQ		Stamped D (X=2.90mm/2.95mm). 52108047AB
		1	B, T			ER0	DDQ		Stamped D (X=2.90mm/2.95mm). 52108048AB
		1	J, U			EN0	DDQ		Stamped D (X=2.90mm/2.95mm). 52108121AB
	83506272	1	B, T			ER0	DDQ		Stamped E (X=2.95mm/3.00mm). 52107749
		1	J, U			EN0	DDQ		Stamped E (X=2.95mm/3.00mm). 52107752
		1	J, U			ER0	DDQ		Stamped E (X=2.95mm/3.00mm). 52108047
		1	J, U			ER0	DDQ		Stamped E (X=2.95mm/3.00mm). 52108047AB

CHEROKEE (XJ)

SERIES	LINE	BODY	ENGINE	TRANSMISSION
L = LOWLINE	T = JEEP - 2WD B = JEEP - 2WD (RHD) J = JEEP - 4WD U = JEEP - 4WD (RHD)	72 = SPORT UTILITY 2-DR 74 = SPORT UTILITY 4-DR	ENC = 2.5L 4 Cyl Turbo Diesel Engine EPB = 2.5L 4 Cylinder Engine EPE = Engine - 2.5L Power Tech I-4 Cyl. ERH = 4.0L Power Tech I-6 Engine	DDQ = 5-Speed Manual Transmission DGS = 4-Speed Automatic AW4 Transmission DGO = ALL AUTOMATIC TRANSMISSIONS DBB = ALL MANUAL TRANSMISSIONS

Gear Train AX 15 (DDQ)
Figure AX-415

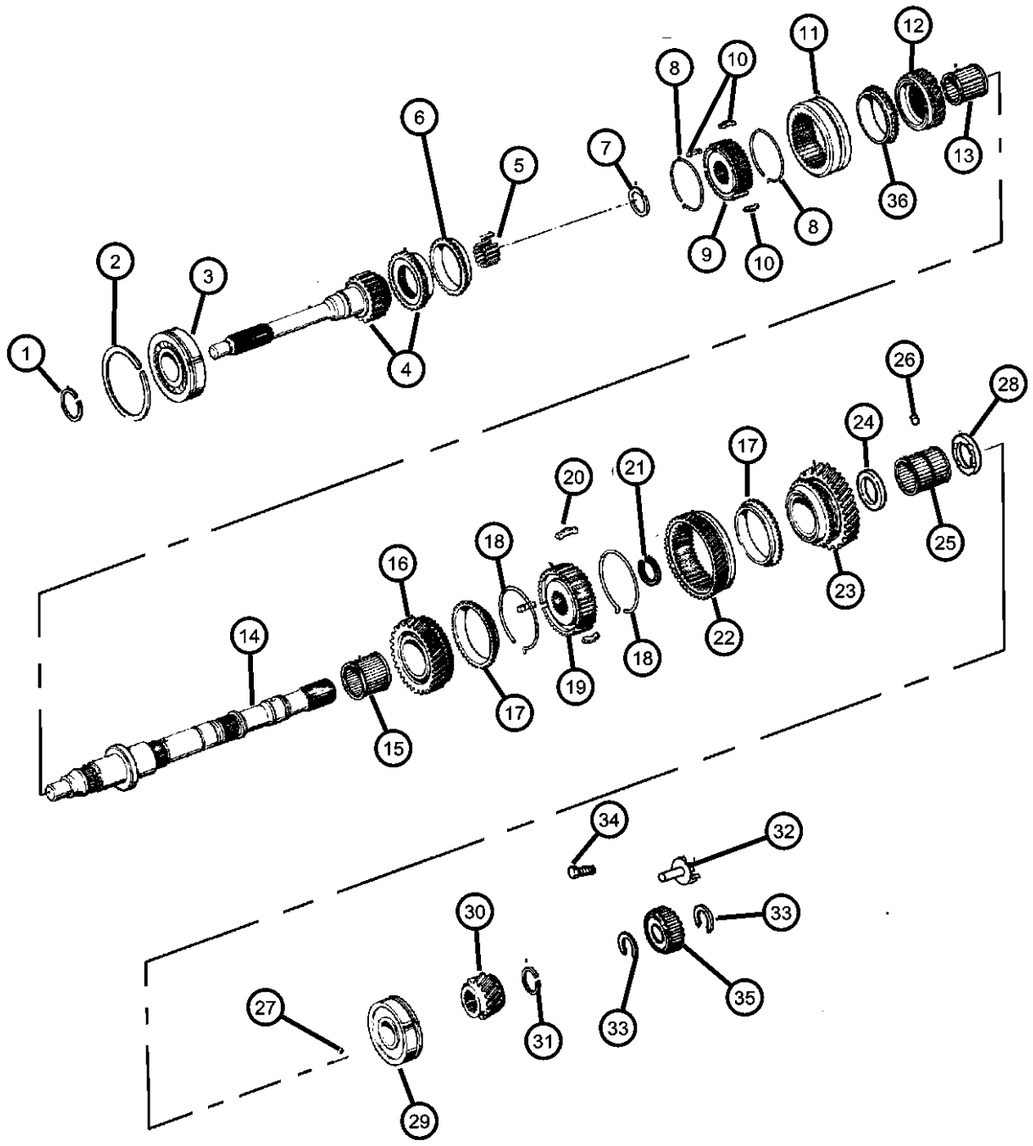

ITEM	PART NUMBER	QTY	LINE	SERIES	BODY	ENGINE	TRANS	TRIM	DESCRIPTION
		1	B, T			ER0	DDQ		Stamped E (X+2.95mm/3.00mm). 52108048AB
		1	J, U			EN0	DDQ		Stamped E (X=2.95mm/3.00mm). 52108121AB
	83506273	1	B, T			ER0	DDQ		Stamped F (X=3.00mm/3.05mm). 52107749
		1	J, U			EN0	DDQ		Stamped F (X=3.00mm/3.05mm)52107752
		1	J, U			ER0	DDQ		Stamped F (X=3.00mm/3.05mm). 52108047
		1	J, U			ER0	DDQ		Stamped F (X=3.00mm/3.05mm). 52108047AB
		1	B, T			ER0	DDQ		Stamped F (X=3.00mm/3.05mm). 52108048AB
		1	J, U			EN0	DDQ		Stamped F (X=3.00mm/3.05mm). 52108121AB
	83506274	1	B, T			ER0	DDQ		Stamped G (X=3.05mm/3.10mm). 52107749
		1	J, U			EN0	DDQ		Stamped G (X=3.05mm/3.10mm). 52107752
		1	J, U			ER0	DDQ		Stamped G (X=3.05mm/3.10mm). 52108047
		1	J, U			ER0	DDQ		Stamped G (X=3.05mm/310mm). 52108047AB
		1	B, T			ER0	DDQ		Stamped G (X=3.05mm/3.10mm). 52108048AB
		1	J, U			EN0	DDQ		Stamped G (X=3.05mm/3.10mm). 52108121AB
	83506275	1	B, T			ER0	DDQ		Stamped H (X=3.10mm/3.15mm). 52107749
		1	J, U			EN0	DDQ		Stamped H (X=3.10mm/3.15mm). 52107752
		1	J, U			ER0	DDQ		Stamped H (X=3.10mm/3.15mm). 52108047
		1	J, U			ER0	DDQ		Stamped H (X=3.10mm/3.15mm). 52108047AB

CHEROKEE (XJ)

SERIES	LINE	BODY	ENGINE	TRANSMISSION
L = LOWLINE	T = JEEP - 2WD B = JEEP - 2WD (RHD) J = JEEP - 4WD U = JEEP - 4WD (RHD)	72 = SPORT UTILITY 2-DR 74 = SPORT UTILITY 4-DR	ENC = 2.5L 4 Cyl Turbo Diesel Engine EPB = 2.5L 4 Cylinder Engine EPE = Engine - 2.5L Power Tech I-4 Cyl. ERH = 4.0L Power Tech I-6 Engine	DDQ = 5-Speed Manual Transmission DGS = 4-Speed Automatic AW4 Transmission DGO = ALL AUTOMATIC TRANSMISSIONS DBB = ALL MANUAL TRANSMISSIONS

Gear Train AX 15 (DDQ)
Figure AX-415

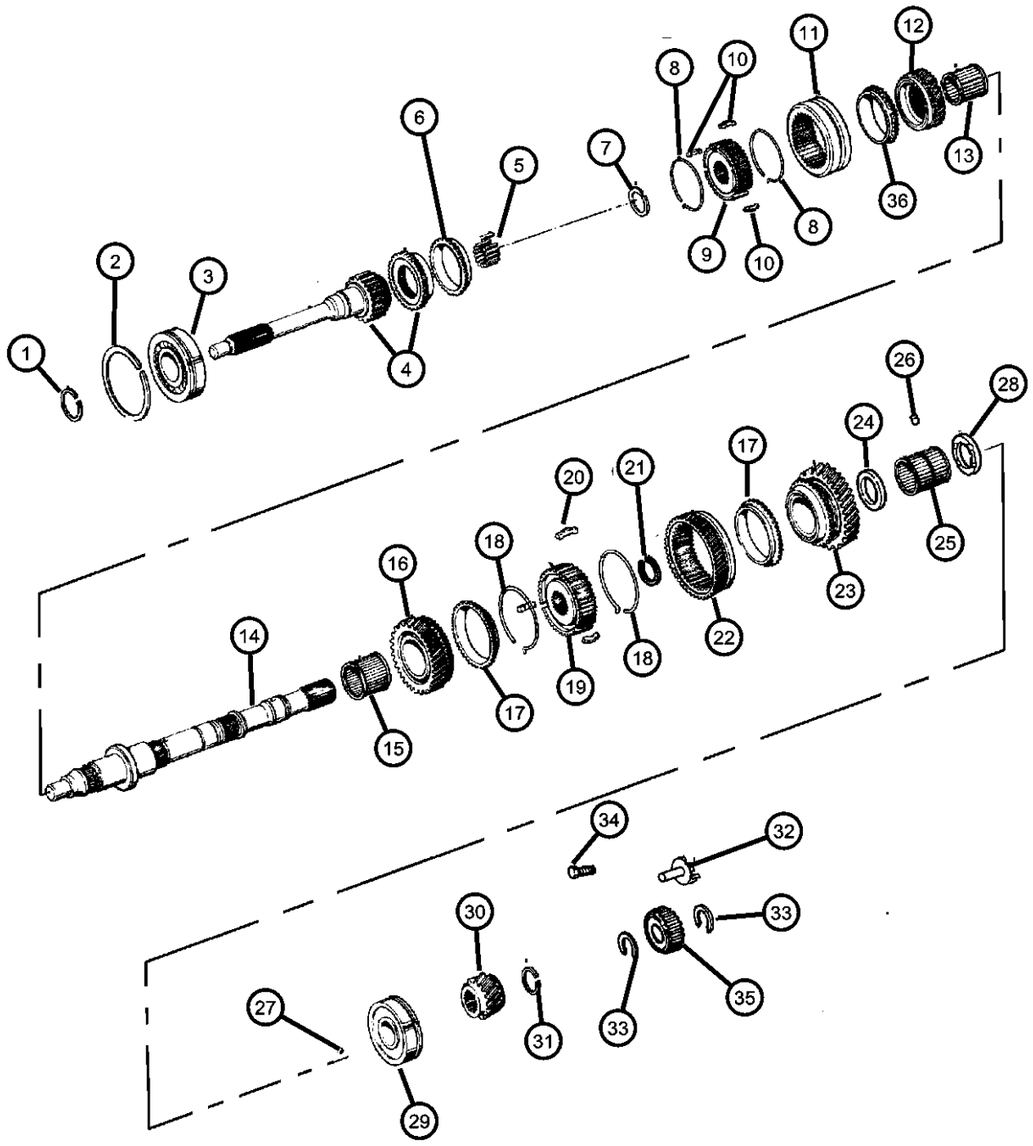

ITEM	PART NUMBER	QTY	LINE	SERIES	BODY	ENGINE	TRANS	TRIM	DESCRIPTION
		1	B, T			ER0	DDQ		Stamped H (X=3.10mm/3.15mm). 52108048AB
		1	J, U			EN0	DDQ		Stamped H (X=3.10mm/3.15mm). 52108121AB
	83506276	1	B, T			ER0	DDQ		Stamped I (X=3.15mm/3.20mm). 52108047
		1	J, U			EN0	DDQ		Stamped I (X=3.15mm/3.20mm). 52107752
		1	J, U			ER0	DDQ		Stamped I (X=3/15mm/3.20mm). 52108047
		1	J, U			ER0	DDQ		Stamped I (X=3.15mm/3.20mm). 52108047AB
		1	B, T			ER0	DDQ		Stamped I (X=3.15mm/3.20mm). 52108048AB
		1	J, U			EN0	DDQ		Stamped I (X=3.15mm/3.20mm). 52108121AB
	83506277	1	B, T			ER0	DDQ		Stamped J (X=3.20mm/3.25mm). 52107749
		1	J, U			EN0	DDQ		Stamped J (X=3.20mm/3.25mm). 52107752
		1	J, U			ER0	DDQ		Stamped J (X=3.20mm/3.25mm). 52108047
		1	J, U			ER0	DDQ		Stamped J (X=3.20mm/3.25mm). 52108047AB
		1	B, T			ER0	DDQ		Stamped J (X=3.20mm/3.25mm). 52108048AB
		1	J, U			EN0	DDQ		Stamped J (X=3.20mm/3.25mm). 52108121AB
	83506278	1	B, T			ER0	DDQ		Stamped K (X=3.25mm/3.30mm). 52107749
		1	J, U			EN0	DDQ		Stamped K (X=3.25mm/3.30mm). 52107752
		1	J, U			ER0	DDQ		Stamped K (X=3.25mm/3.30mm). 52108047
		1	J, U			ER0	DDQ		Stamped K (X=3.25mm/3.30mm). 52108047AB
		1	B, T			ER0	DDQ		Stamped K (X=3.25mm/3.30mm). 52108048AB
		1	J, U			EN0	DDQ		Stamped K (X=3.25mm/3.30mm). 52108121AB

CHEROKEE (XJ)

SERIES	LINE	BODY	ENGINE	TRANSMISSION
L = LOWLINE	T = JEEP - 2WD B = JEEP - 2WD (RHD) J = JEEP - 4WD U = JEEP - 4WD (RHD)	72 = SPORT UTILITY 2-DR 74 = SPORT UTILITY 4-DR	ENC = 2.5L 4 Cyl Turbo Diesel Engine EPB = 2.5L 4 Cylinder Engine EPE = Engine - 2.5L Power Tech I-4 Cyl. ERH = 4.0L Power Tech I-6 Engine	DDQ = 5-Speed Manual Transmission DGS = 4-Speed Automatic AW4 Transmission DGO = ALL AUTOMATIC TRANSMISSIONS DBB = ALL MANUAL TRANSMISSIONS

Gear Train AX 15 (DDQ)
Figure AX-415

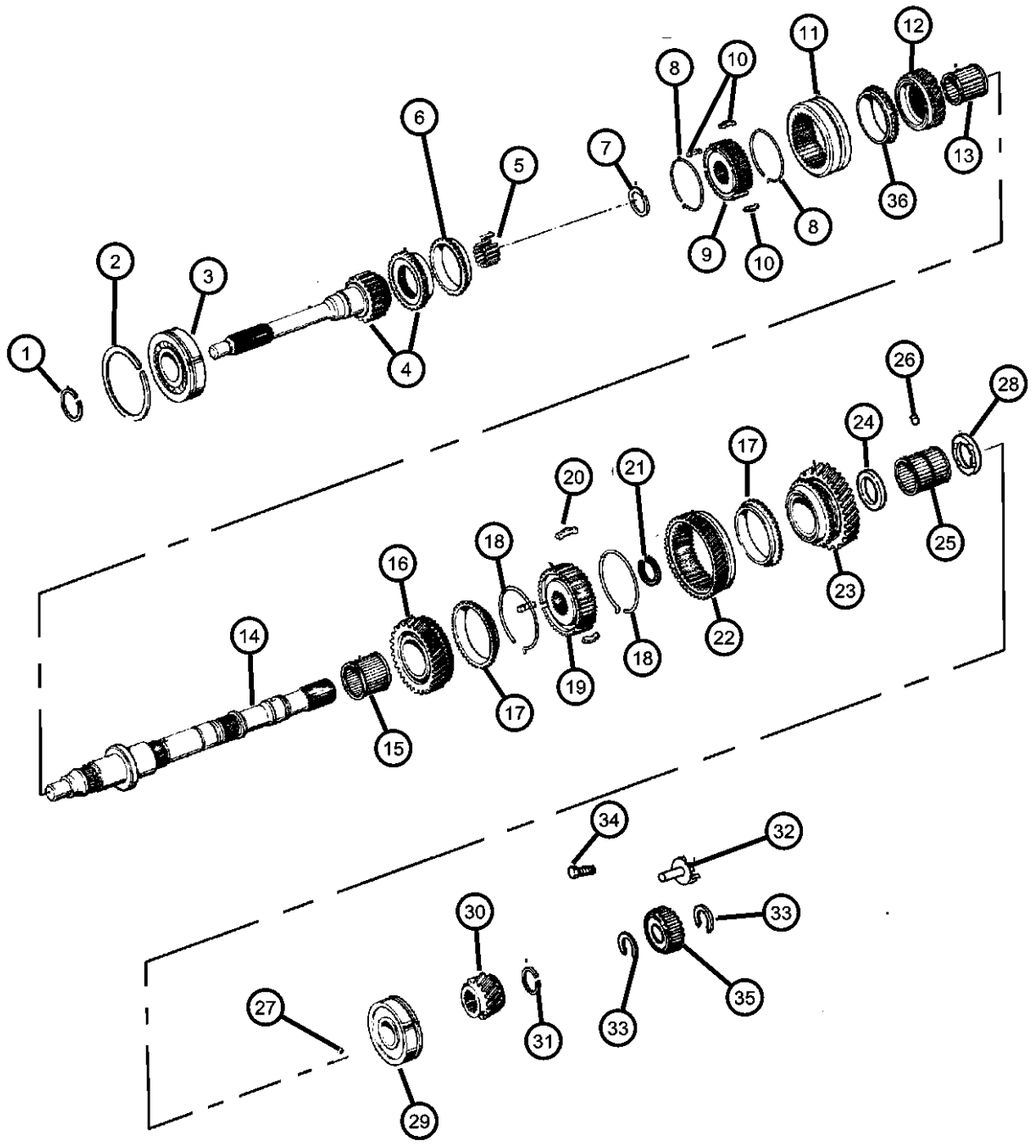

ITEM	PART NUMBER	QTY	LINE	SERIES	BODY	ENGINE	TRANS	TRIM	DESCRIPTION
	83506279	1	B, T			ER0	DDQ		Stamped L (X=3.30mm/3.35mm). 52107749
		1	J, U			EN0	DDQ		Stamped L (X=3.30mm/3.35mm). 52107752
		1	J, U			ER0	DDQ		Stamped L (X=3.30mm/3.35mm). 52108047
		1	J, U			ER0	DDQ		Stamped L (X=3.30mm/3.35mm). 52108047AB
		1	B, T			ER0	DDQ		Stamped L (X=3.30mm/3.35mm). 52108048AB
		1	J, U			EN0	DDQ		Stamped L (X=3.30mm/3.35mm). 52108121AB
32									PIPE, Oil Receiver
	83500646	1	B, T			ER0	DDQ		With Transmission # (52107749) & (52108048AB)
		1	J, U			ER0	DDQ		(52108047),(52108047AB),(5210775 1997 XJ & (52108121AB) 1998 & 1999 XJ
	83506226	1	B, T			ER0	DDQ		(52107749) & (52108048AB)
		1	J, U			ER0	DDQ		(52108047) 1997 XJ
33									SNAP RING
	83506229	2	B, T			ER0	DDQ		52107749
		2	B, T			ER0	DDQ		52108048AB
34									BOLT, Oil Receiver Pipe
	04897134AA	1	B, T			ER0	DDQ		52107749
		1	B, T			ER0	DDQ		52108048AB
35									GEAR, Speedometer Drive
	83506228	1	B, T			ER0	DDQ		52107749
		1	B, T			ER0	DDQ		52108048AB
36									STOP RING, Synchronizer
	04897051AA	1	J, U			ER0	DDQ		
		1	B, T			ER0	DDQ		
		1	J, U			EN0	DDQ		

CHEROKEE (XJ)

SERIES	LINE	BODY	ENGINE	TRANSMISSION
L = LOWLINE	T = JEEP - 2WD B = JEEP - 2WD (RHD) J = JEEP - 4WD U = JEEP - 4WD (RHD)	72 = SPORT UTILITY 2-DR 74 = SPORT UTILITY 4-DR	ENC = 2.5L 4 Cyl Turbo Diesel Engine EPB = 2.5L 4 Cylinder Engine EPE = Engine - 2.5L Power Tech I-4 Cyl. ERH = 4.0L Power Tech I-6 Engine	DDQ = 5-Speed Manual Transmission DGS = 4-Speed Automatic AW4 Transmission DGO = ALL AUTOMATIC TRANSMISSIONS DBB = ALL MANUAL TRANSMISSIONS

Reverse Idler Ax 15 (DDQ)
Figure AX-420

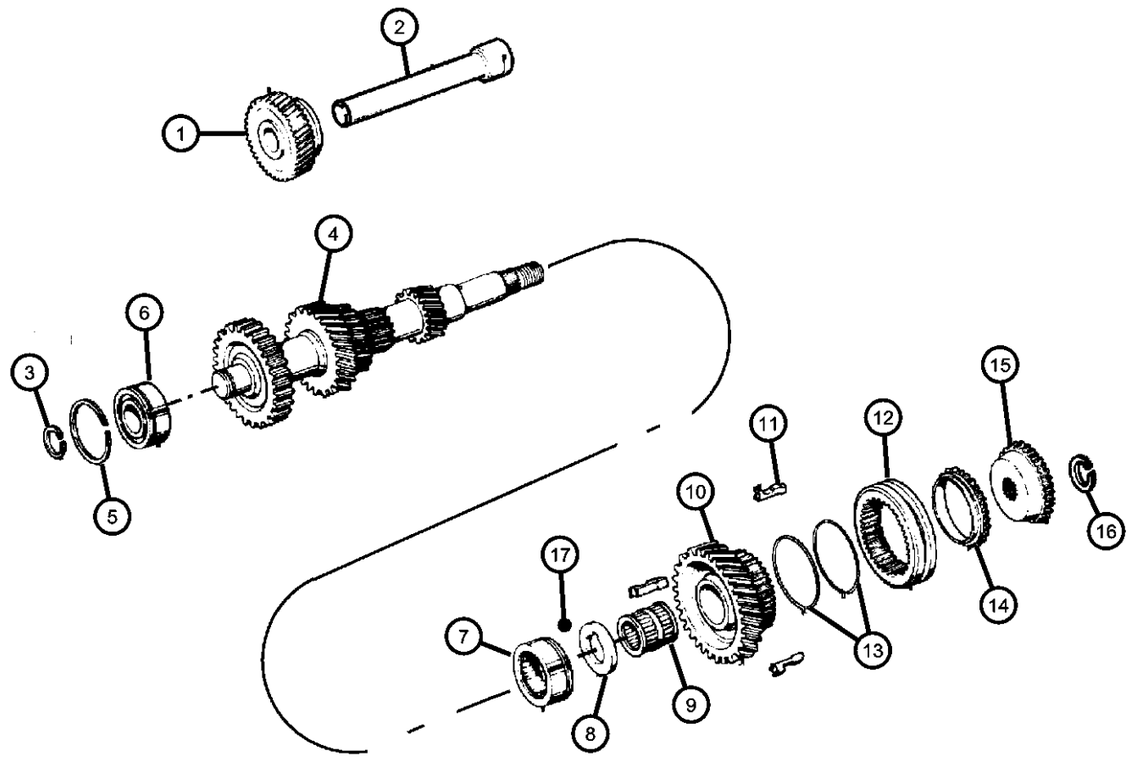

ITEM	PART NUMBER	QTY	LINE	SERIES	BODY	ENGINE	TRANS	TRIM	DESCRIPTION
Notes:									
DDQ = 5 Speed Manual Transmission									
ER0 = All 4.0L 6 Cylinder Gas Engines									
ENC = 2.5L 4 Cylinder Turbo Diesel Engine									
1									GEAR, Reverse Idler
	05252084	1	B, T			ER0	DDQ		52107749
		1	J, U			EN0	DDQ		52107752
		1	J			ER0	DDQ		52108047
2									IDLER SHAFT, Transmission
	83506258	1	B, T			ER0	DDQ		52107749
		1	J, U			EN0	DDQ		52107752
		1	J			ER0	DDQ		52108047
3									SNAP RING
	83506081	1	B, T			ER0	DDQ		Stamped A (X=2.00mm/2.05mm)
		1	J, U			EN0	DDQ		Stamped A (X=2.00mm/2.05mm)
		1	J, U			ER0	DDQ		Stamped A (X=2.00mm/2.05mm)
	83506082	1	B, T			ER0	DDQ		Stamped B (X=2.05mm/2.10mm)
		1	J, U			EN0	DDQ		Stamped B (X=2.05mm/2.10mm)
		1	J, U			ER0	DDQ		Stamped B (X=2.05mm/2.10mm)
	83506083	1	B, T			ER0	DDQ		Stamped C (X=2.10mm/2.15mm)
		1	J, U			EN0	DDQ		Stamped C (X=2.10mm/2.15mm)
		1	J, U			ER0	DDQ		Stamped C (X=2.10mm/2.15mm)
	83506084	1	B, T			ER0	DDQ		Stamped D (X=2.15mm/2.20nn)
		1	J, U			EN0	DDQ		Stamped D (X=2.15mm/2.20mm)
		1	J, U			ER0	DDQ		Stamped D (X=2.15mm/2.20mm)
	83506085	1	B, T			ER0	DDQ		Stamped E (X=2.20mm/2.25mm)
		1	J, U			EN0	DDQ		Stamped E (X=2.20mm/2.25mm)
		1	J, U			ER0	DDQ		Stamped E (X=2.20mm/2.25mm)
4									GEAR, Countershaft
	04636371	1	B, T			ER0	DDQ		52107749
		1	J, U			ER0	DDQ		52108047
5									SNAP RING
	83506220	1	B, T			ER0	DDQ		52107749
		1	J, U			EN0	DDQ		52107752

CHEROKEE (XJ)

SERIES	LINE	BODY	ENGINE	TRANSMISSION
L = LOWLINE	T = JEEP - 2WD B = JEEP - 2WD (RHD) J = JEEP - 4WD U = JEEP - 4WD (RHD)	72 = SPORT UTILITY 2-DR 74 = SPORT UTILITY 4-DR	ENC = 2.5L 4 Cyl Turbo Diesel Engine EPB = 2.5L 4 Cylinder Engine EPE = Engine - 2.5L Power Tech I-4 Cyl. ERH = 4.0L Power Tech I-6 Engine	DDQ = 5-Speed Manual Transmission DGS = 4-Speed Automatic AW4 Transmission DGO = ALL AUTOMATIC TRANSMISSIONS DBB = ALL MANUAL TRANSMISSIONS

Reverse Idler Ax 15 (DDQ)
Figure AX-420

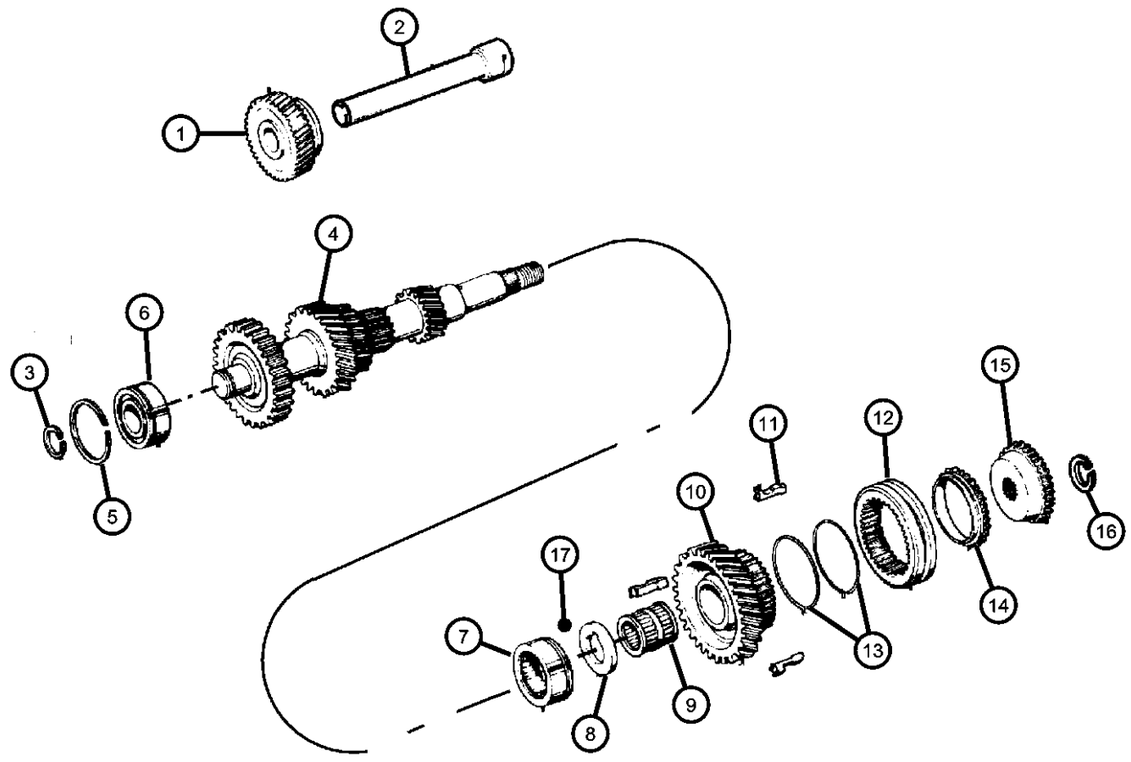

ITEM	PART NUMBER	QTY	LINE	SERIES	BODY	ENGINE	TRANS	TRIM	DESCRIPTION
		1	J, U			ER0	DDQ		52108047
6									BEARING, Countershaft
	83506259	1	B, T			ER0	DDQ		52107749
		1	J, U			EN0	DDQ		52107752
		1	J, U			ER0	DDQ		52108047
7									NEEDLE BEARING, Countershaft
	83506080	1	B, T			ER0	DDQ		562107749
		1	J, U			EN0	DDQ		52107752
		1	J, U			ER0	DDQ		52108047
8									THRUST WASHER, Fifth Gear
	83506245	1	B, T			ER0	DDQ		52107749
		1	J, U			EN0	DDQ		52107752
		1	J, U			ER0	DDQ		52108047
9									NEEDLE BEARING, Fifth Gear
	83506079	1	B, T			ER0	DDQ		52107749
		1	J, U			EN0	DDQ		52107752
		1	J, U			ER0	DDQ		52108047
10									GEAR, Countershaft Fifth
	04637527	1	B, T			ER0	DDQ		
		1	J, U			EN0	DDQ		52107752
		1	J, U			ER0	DDQ		
11									KEY, Synchronizer
	04637532	3	B, T			ER0	DDQ		52107749
		3	J, U			EN0	DDQ		52107752
		2	J, U			ER0	DDQ		52108047
12									SLEEVE, Synchronizer
	83506257	1	B, T			ER0	DDQ		52107749
		1	J, U			EN0	DDQ		52107752
		1	J, U			ER0	DDQ		52108047
13									SPRING, Synchronizer
	04637534	2	B, T			ER0	DDQ		52107749
		2	J, U			EN0	DDQ		52107752
		2	J, U			ER0	DDQ		52108047

CHEROKEE (XJ)

SERIES	LINE	BODY	ENGINE	TRANSMISSION
L = LOWLINE	T = JEEP - 2WD B = JEEP - 2WD (RHD) J = JEEP - 4WD U = JEEP - 4WD (RHD)	72 = SPORT UTILITY 2-DR 74 = SPORT UTILITY 4-DR	ENC = 2.5L 4 Cyl Turbo Diesel Engine EPB = 2.5L 4 Cylinder Engine EPE = Engine - 2.5L Power Tech I-4 Cyl. ERH = 4.0L Power Tech I-6 Engine	DDQ = 5-Speed Manual Transmission DGS = 4-Speed Automatic AW4 Transmission DGO = ALL AUTOMATIC TRANSMISSIONS DBB = ALL MANUAL TRANSMISSIONS

Reverse Idler Ax 15 (DDQ)
Figure AX-420

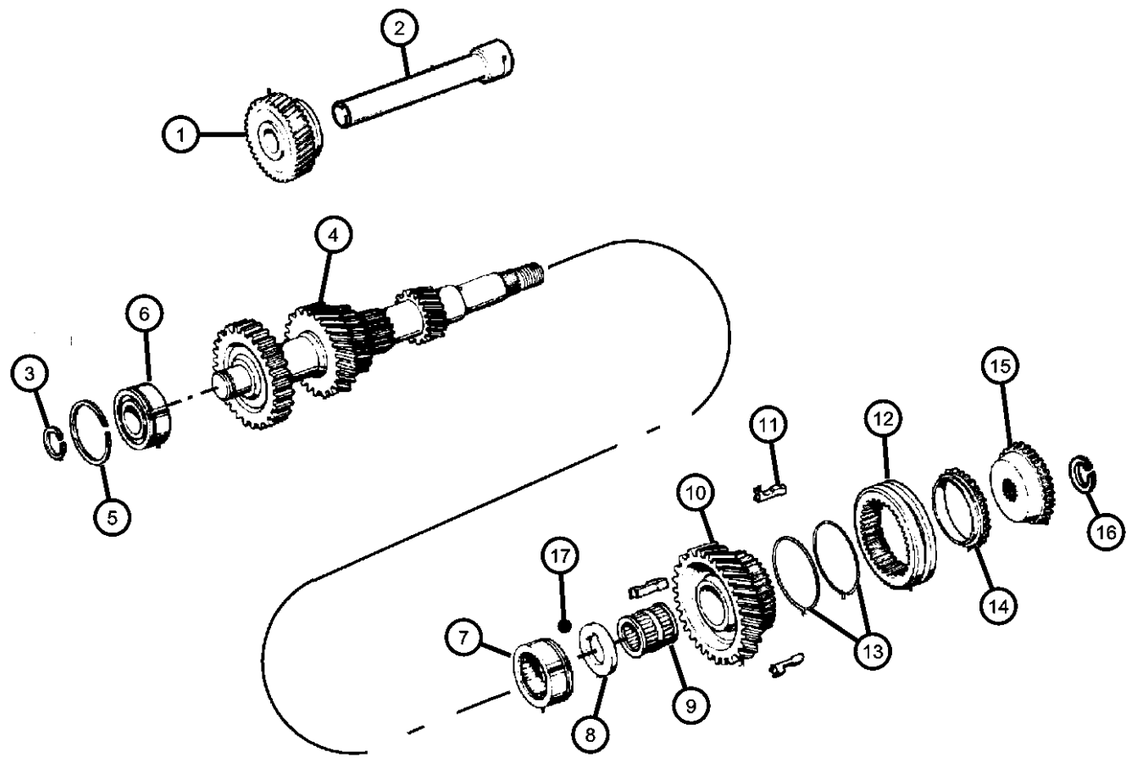

ITEM	PART NUMBER	QTY	LINE	SERIES	BODY	ENGINE	TRANS	TRIM	DESCRIPTION
14									STOP RING, Synchronizer
	04637533	1	B, T			ER0	DDQ		52107749
		1	J, U			EN0	DDQ		52107752
		1	J, U			ER0	DDQ		52108047
15									GEAR, Fifth Splined
	83506242	1	B, T			ER0	DDQ		52107749
		1	J, U			EN0	DDQ		52107752
		1	J			ER0	DDQ		52108047
16									SNAP RING
	83506260	1	B, T			ER0	DDQ		Stamped A (X=2.80mm/2.85mm). 52107749
		1	J, U			EN0	DDQ		Stamped A (X=2.80mm/2.85mm). 52107752
		1	J			ER0	DDQ		Stamped A (X=2.80mm/2.85mm). 52108047
	83506261	1	B, T			ER0	DDQ		Stamped B (X=2.85mm/2.90mm). 52107749
		1	J, U			EN0	DDQ		Stamped B (X=2.85mm/2.90mm). 52107752
		1	J			ER0	DDQ		Stamped B (X=2.85mm/2.90mm). 52107749
	83506262	1	B, T			ER0	DDQ		Stamped C (X=2.90mm/2.95mm) . 52107749
		1	J, U			EN0	DDQ		Stamped C (X=2.90mm/2.95mm) . 52107752
	83506263	1	B, T			ER0	DDQ		Stamped D (X=2.95mm/3.00mm) . 52107749
		1	J, U			EN0	DDQ		Stamped D (X=2.95mm/3.00mm) .52107752
		1	J			ER0	DDQ		Stamped D (X=2.95mm/3.00mm) . 52108047
	83506264	1	B, T			ER0	DDQ		Stamped E (X=3.00mm/3.05mm) . 52107749
		1	J, U			EN0	DDQ		Stamped E (X=3.00mm/3.05mm) . 52107752
		1	J			ER0	DDQ		5tamped E (X=3.00mm/3.05mm) . 52108047
	83506265	1	B, T			ER0	DDQ		Stamped F (X=3.05mm/3.10mm) . 52107749
		1	J, U			EN0	DDQ		Stamped F (X=3.05mm/3.10mm) . 52107752

CHEROKEE (XJ)

SERIES	LINE	BODY	ENGINE	TRANSMISSION
L = LOWLINE	T = JEEP - 2WD B = JEEP - 2WD (RHD) J = JEEP - 4WD U = JEEP - 4WD (RHD)	72 = SPORT UTILITY 2-DR 74 = SPORT UTILITY 4-DR	ENC = 2.5L 4 Cyl Turbo Diesel Engine EPB = 2.5L 4 Cylinder Engine EPE = Engine - 2.5L Power Tech I-4 Cyl. ERH = 4.0L Power Tech I-6 Engine	DDQ = 5-Speed Manual Transmission DGS = 4-Speed Automatic AW4 Transmission DGO = ALL AUTOMATIC TRANSMISSIONS DBB = ALL MANUAL TRANSMISSIONS

Reverse Idler Ax 15 (DDQ)
Figure AX-420

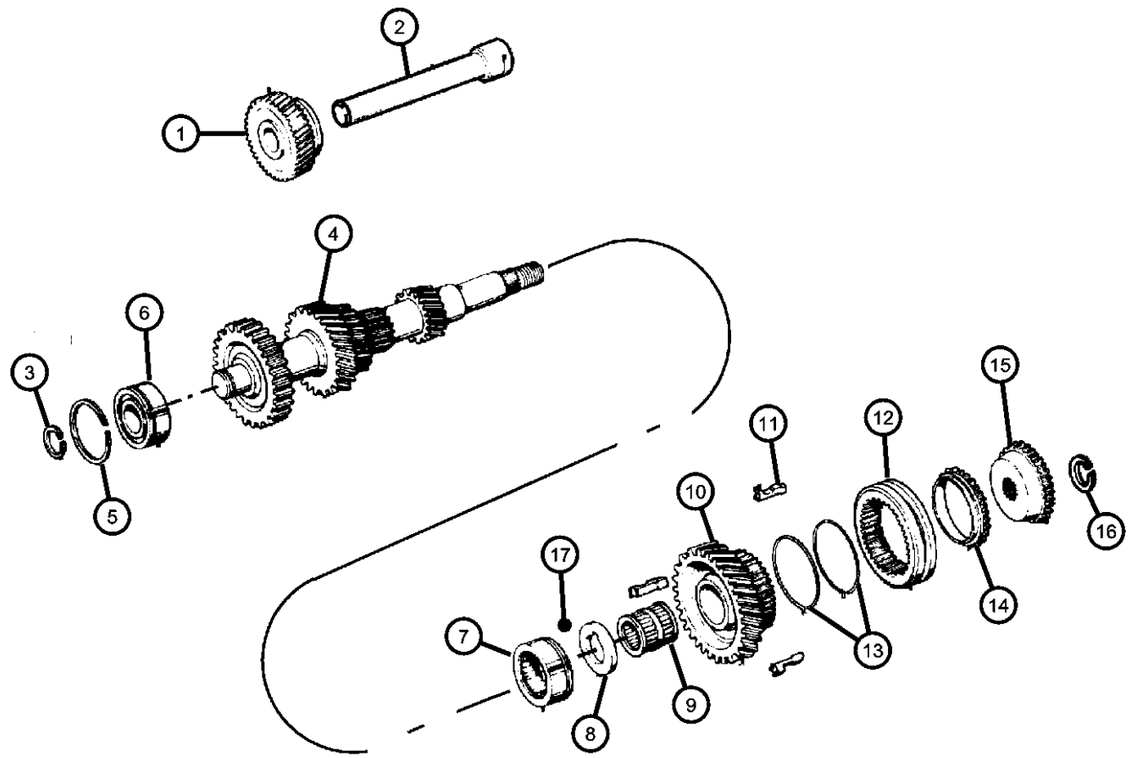

ITEM	PART NUMBER	QTY	LINE	SERIES	BODY	ENGINE	TRANS	TRIM	DESCRIPTION
		1	J			ER0	DDQ		Stamped F (X=3.05mm/3.10mm) . 52108047
	83506266	1	B, T			ER0	DDQ		Stamped G (X=3.10mm/3.15mm) . 52107749
		1	J, U			EN0	DDQ		Stamped G (X=3.10mm/3.15mm) . 52107752
		1	J			ER0	DDQ		Stamped G (X=3.10mm/3.15mm) . 52108047
	83506267	1	B, T			ER0	DDQ		Stamped H (X=3.15mm/3.20mm) . 52107749
		1	J, U			EN0	DDQ		Stamped H (X=3.15mm/3.20mm) . 52107752
		1	J			ER0	DDQ		Stamped H (X=3.15mm/3.20mm) . 52108047
17									BALL, Reverse
	83500573	1	B, T			ER0	DDQ		52107749
		1	J, U			EN0	DDQ		52107752
		1	J, U			ER0	DDQ		52108047

CHEROKEE (XJ)

SERIES	LINE	BODY	ENGINE	TRANSMISSION
L = LOWLINE	T = JEEP - 2WD B = JEEP - 2WD (RHD) J = JEEP - 4WD U = JEEP - 4WD (RHD)	72 = SPORT UTILITY 2-DR 74 = SPORT UTILITY 4-DR	ENC = 2.5L 4 Cyl Turbo Diesel Engine EPB = 2.5L 4 Cylinder Engine EPE = Engine - 2.5L Power Tech I-4 Cyl. ERH = 4.0L Power Tech I-6 Engine	DDQ = 5-Speed Manual Transmission DGS = 4-Speed Automatic AW4 Transmission DGO = ALL AUTOMATIC TRANSMISSIONS DBB = ALL MANUAL TRANSMISSIONS

Forks AX 5 (DDQ)
Figure AX-910

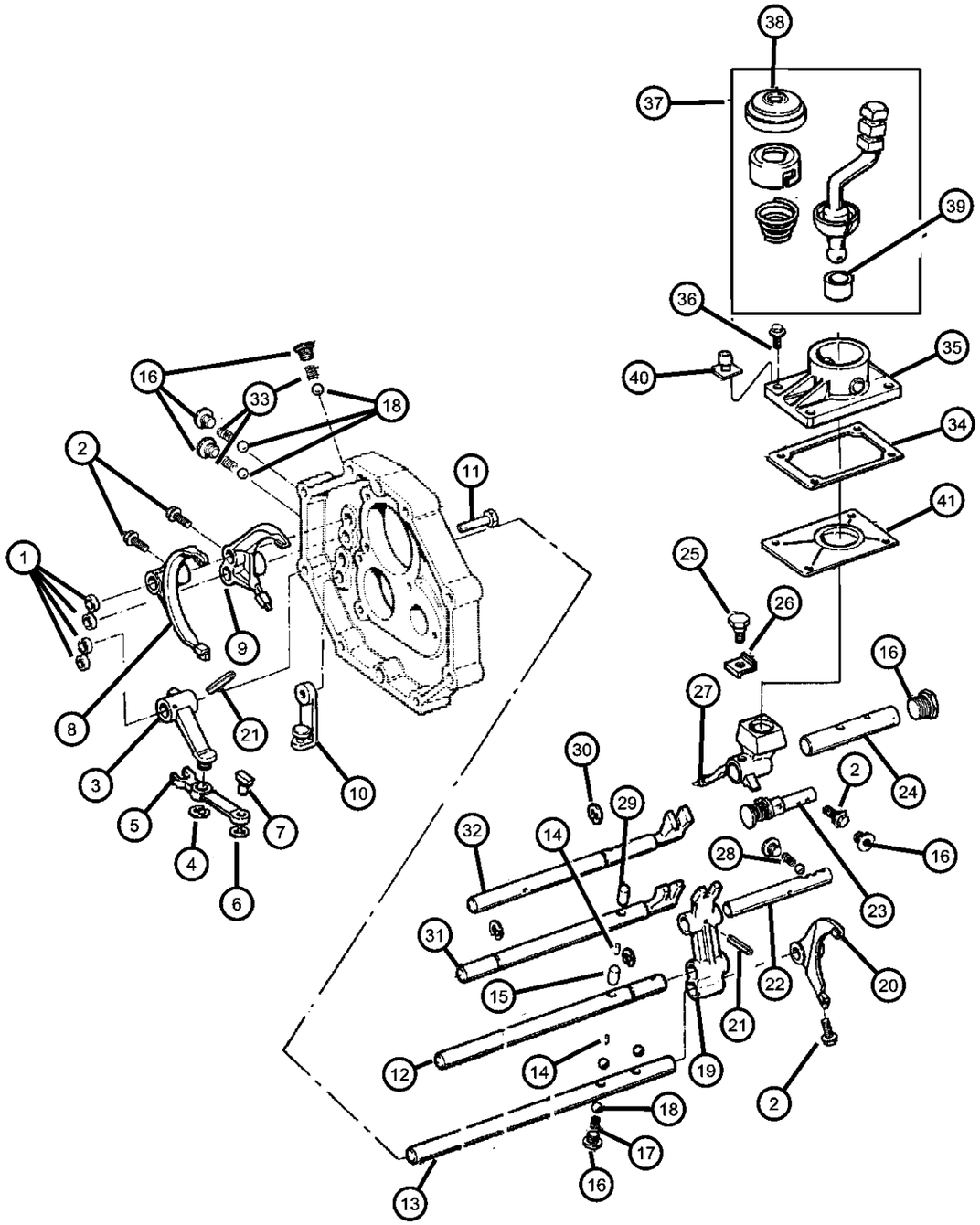

ITEM	PART NUMBER	QTY	LINE	SERIES	BODY	ENGINE	TRANS	TRIM	DESCRIPTION
Notes:									
DDQ = 5 Speed Manual Transmission									
EP0 = All 2.5L Gas Engines									
1									PLUG, Shift Rail
	83500503	4	B, T			EP0	DDQ		
		4	J, U			EP0	DDQ		
2									BOLT, Shift Fork
	83502664	2	B, T			EP0	DDQ		
		2	J, U			EP0	DDQ		
3									FORK, Transmission
	83500526	1	B, T			EP0	DDQ		
		1	J, U			EP0	DDQ		
4									SNAP RING
	83500548	1	B, T			EP0	DDQ		
		1	J, U			EP0	DDQ		
5									ARM, Reverse Shift
	83500529	1	B, T			EP0	DDQ		
		1	J, U			EP0	DDQ		
6									SNAP RING
	83500547	1	B, T			EP0	DDQ		
		1	J, U			EP0	DDQ		
7									SHOE, Shift Lever
	83503552	1	B, T			EP0	DDQ		
		1	J, U			EP0	DDQ		
8									FORK PACKAGE, Shift
	04740236	1	B, T			EP0	DDQ		
		1	J, U			EP0	DDQ		
9									FORK, Transmission
	83502662	1	B, T			EP0	DDQ		
		1	J, U			EP0	DDQ		
10									BRACKET, Reverse Arm
	83500531	1	B, T			EP0	DDQ		
		1	J, U			EP0	DDQ		
11									BOLT, Bearing Retainer

CHEROKEE (XJ)

SERIES	LINE	BODY	ENGINE	TRANSMISSION
L = LOWLINE	T = JEEP - 2WD B = JEEP - 2WD (RHD) J = JEEP - 4WD U = JEEP - 4WD (RHD)	72 = SPORT UTILITY 2-DR 74 = SPORT UTILITY 4-DR	ENC = 2.5L 4 Cyl Turbo Diesel Engine EPB = 2.5L 4 Cylinder Engine EPE = Engine - 2.5L Power Tech I-4 Cyl. ERH = 4.0L Power Tech I-6 Engine	DDQ = 5-Speed Manual Transmission DGS = 4-Speed Automatic AW4 Transmission DGO = ALL AUTOMATIC TRANSMISSIONS DBB = ALL MANUAL TRANSMISSIONS

Forks AX 5 (DDQ)
Figure AX-910

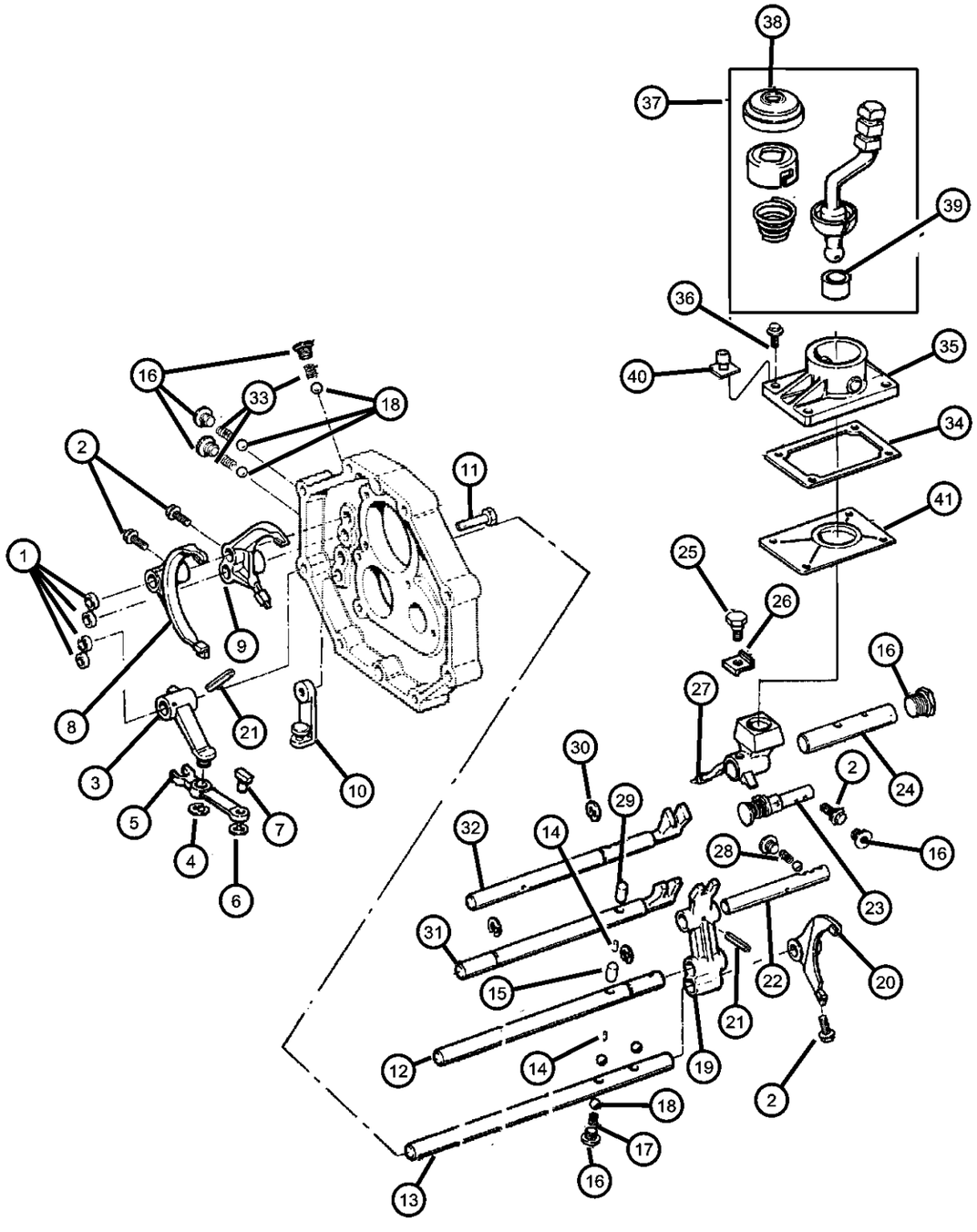

ITEM	PART NUMBER	QTY	LINE	SERIES	BODY	ENGINE	TRANS	TRIM	DESCRIPTION
	83500549	2	B, T			EP0	DDQ		
		2	J, U			EP0	DDQ		
12									SHAFT, Gear Shift Fork, Number 3
	04746659	1	J, U			EP0	DDQ		52107747
		1	B, T			EP0	DDQ		52107746
		1	B, T			EP0	DDQ		52104546
		1	J, U			EP0	DDQ		52104547
13									SHAFT, Gear Shift Fork, Number 4
	04746660	1	J, U			EP0	DDQ		52107747
		1	B, T			EP0	DDQ		52107746
		1	B, T			EP0	DDQ		52104546
		1	J, U			EP0	DDQ		52104547
14									PIN, Shift Shaft
	83500537	2	B, T			EP0	DDQ		
		2	J, U			EP0	DDQ		
15									PIN, Interlock, 21.6mm
	83500541	1	B, T			EP0	DDQ		
		1	J, U			EP0	DDQ		
16									PLUG, Transmission
	83503109	7	J, U			EP0	DDQ		
		6	B, T			EP0	DDQ		
17									SPRING, Compression Shift
	83500638	1	B, T			EP0	DDQ		
		1	J, U			EP0	DDQ		
18									BALL, Gearshift Fork Lock
	83500542	7	B, T			EP0	DDQ		
		7	J, U			EP0	DDQ		
19									HEAD, Shifter Shaft
	04746658	1	B, T			EP0	DDQ		52107746
		1	J, U			EP0	DDQ		52107747
		1	B, T			EP0	DDQ		52104546
		1	J, U			EP0	DDQ		52104547
20									FORK, Transmission

CHEROKEE (XJ)

SERIES	LINE	BODY	ENGINE	TRANSMISSION
L = LOWLINE	T = JEEP - 2WD B = JEEP - 2WD (RHD) J = JEEP - 4WD U = JEEP - 4WD (RHD)	72 = SPORT UTILITY 2-DR 74 = SPORT UTILITY 4-DR	ENC = 2.5L 4 Cyl Turbo Diesel Engine EPB = 2.5L 4 Cylinder Engine EPE = Engine - 2.5L Power Tech I-4 Cyl. ERH = 4.0L Power Tech I-6 Engine	DDQ = 5-Speed Manual Transmission DGS = 4-Speed Automatic AW4 Transmission DGO = ALL AUTOMATIC TRANSMISSIONS DBB = ALL MANUAL TRANSMISSIONS

Forks AX 5 (DDQ)
Figure AX-910

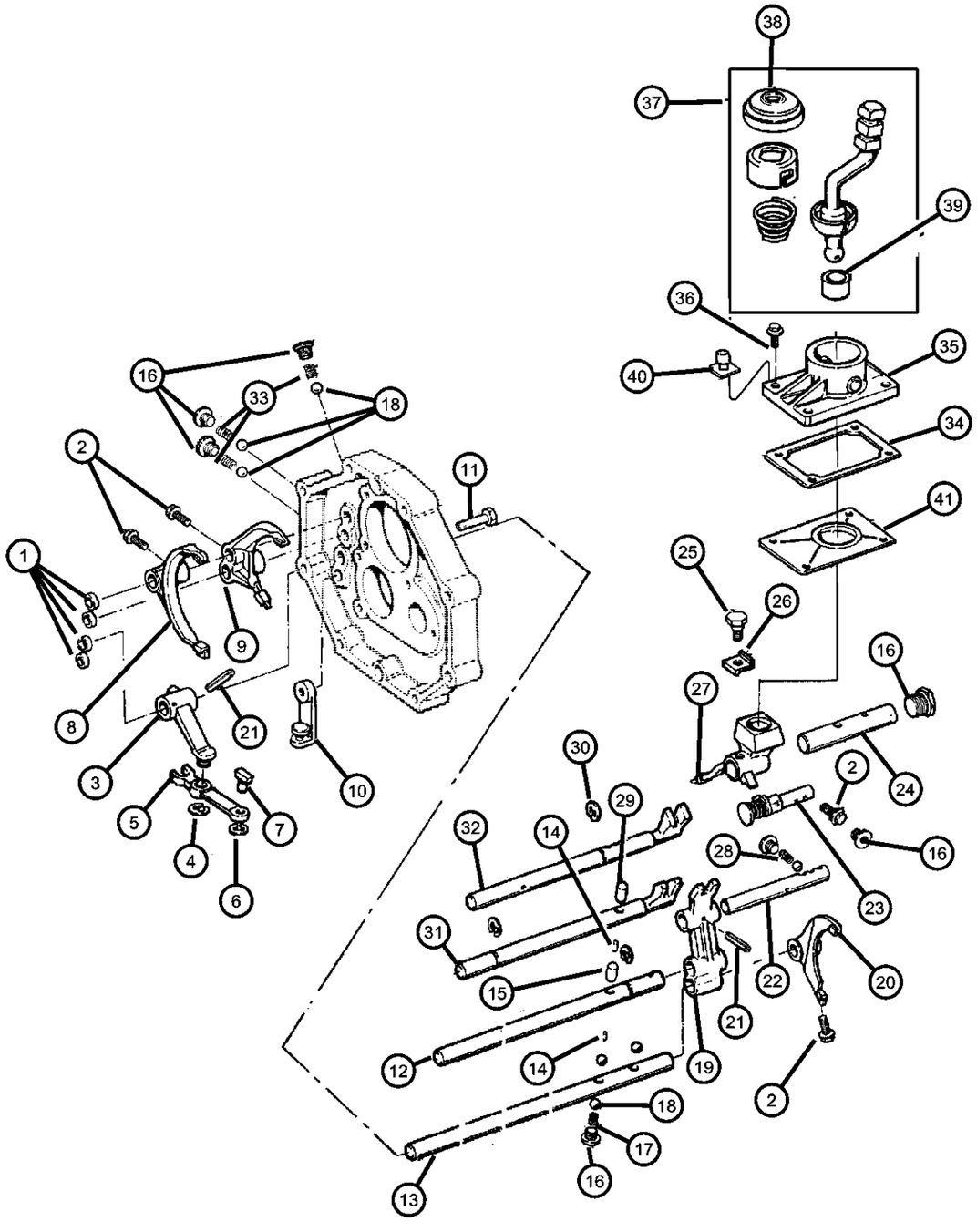

ITEM	PART NUMBER	QTY	LINE	SERIES	BODY	ENGINE	TRANS	TRIM	DESCRIPTION
	04746656	1	J			EP0	DDQ		52107747
		1	B, T			EP0	DDQ		52107746
		1	B, T			EP0	DDQ		52104546
		1	J, U			EP0	DDQ		52104547
21									PIN, Shift Shaft
	83500526	1	B, T			EP0	DDQ		
		1	J, U			EP0	DDQ		
22									SHAFT, Selector
	83500536	2	J, U			EP0	DDQ		52107747
		2	B, T			EP0	DDQ		52107746
		1	B, T			EP0	DDQ		52104546
		1	J, U			EP0	DDQ		52104547
23									PIN, Reverse
	83500635	1	B, T			EP0	DDQ		
		1	J, U			EP0	DDQ		
24									SHAFT, Shift Lever
	83500514	1	B, T			EP0	DDQ		
		1	J, U			EP0	DDQ		
25									BOLT
	83506036	2	B, T			EP0	DDQ		
		2	J, U			EP0	DDQ		
26									WASHER, Lock
	83500523	1	B, T			EP0	DDQ		5107746
		1	J, U			EP0	DDQ		52107747
27									HOUSING, Shift Lever
	83500636	1	B, T			EP0	DDQ		
		1	J, U			EP0	DDQ		
28									SPRING, Compression
	83500544	1	B, T			EP0	DDQ		
		1	J, U			EP0	DDQ		
29									PIN, Interlock, 30.3mm
	83500543	1	B, T			EP0	DDQ		
		1	J, U			EP0	DDQ		

CHEROKEE (XJ)

SERIES	LINE	BODY	ENGINE	TRANSMISSION
L = LOWLINE	T = JEEP - 2WD B = JEEP - 2WD (RHD) J = JEEP - 4WD U = JEEP - 4WD (RHD)	72 = SPORT UTILITY 2-DR 74 = SPORT UTILITY 4-DR	ENC = 2.5L 4 Cyl Turbo Diesel Engine EPB = 2.5L 4 Cylinder Engine EPE = Engine - 2.5L Power Tech I-4 Cyl. ERH = 4.0L Power Tech I-6 Engine	DDQ = 5-Speed Manual Transmission DGS = 4-Speed Automatic AW4 Transmission DGO = ALL AUTOMATIC TRANSMISSIONS DBB = ALL MANUAL TRANSMISSIONS

Forks AX 5 (DDQ)
Figure AX-910

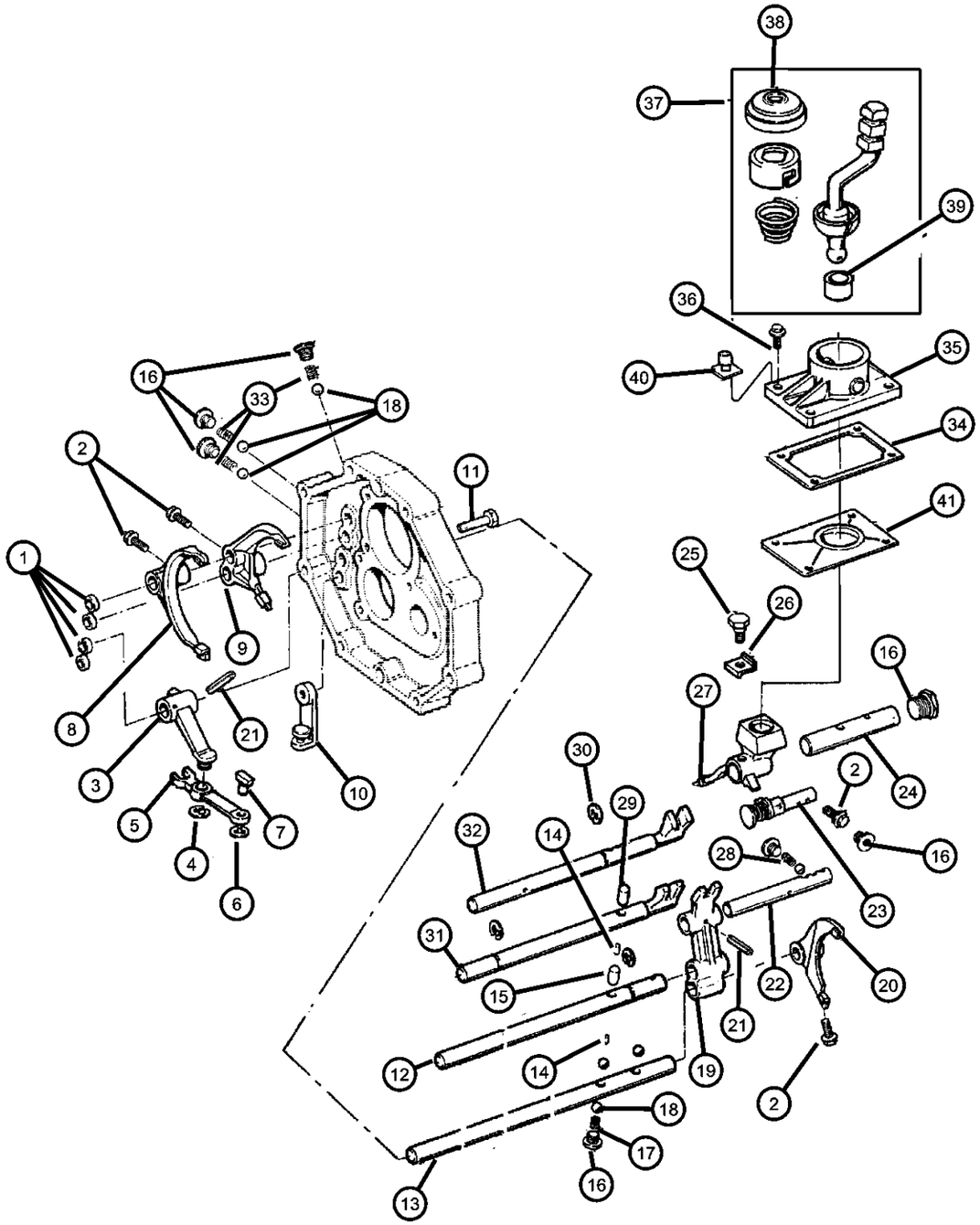

ITEM	PART NUMBER	QTY	LINE	SERIES	BODY	ENGINE	TRANS	TRIM	DESCRIPTION
30									SNAP RING
	83506054	3	J, U			EP0	DDQ		52107747
		3	B, T			EP0	DDQ		52107746
		3	B, T			EP0	DDQ		52104546
		3	J, U			EP0	DDQ		52104547
31									SHAFT, Gear Shift Fork, Number 1
	05252066	1	B, T			ER0	DDQ		52107749
		1	J, U			EN0	DDQ		52107752
		1	J, U			ER0	DDQ		52108047
		1	J, U			ER0	DDQ		52108047AB
		1	B, T			ER0	DDQ		52108048AB
		1	J, U			EN0	DDQ		52108121AB
32									SHAFT, Gear Shift Fork, Number 2
	05252068	1	B, T			ER0	DDQ		52107749
		1	J, U			EN0	DDQ		52107752
		1	J			ER0	DDQ		52108047
		1	J, U			ER0	DDQ		52108047AB
		1	B, T			ER0	DDQ		52108048AB
		1	J, U			EN0	DDQ		52108121AB
33									SPRING, Compression Detent
	83500545	3	B, T			EP0	DDQ		
		3	J, U			EP0	DDQ		
34									GASKET, Shift Lever Housing
	83500521	1	B, T			EP0	DDQ		
		1	J, U			EP0	DDQ		
35									RETAINER, Control Shift Lever
	04864219	1	B, T			EP0	DDQ		
		1	J, U			EP0	DDQ		
36									BOLT AND LOCK WASHER, Hex Head, M8x1.25x30
	83500525	4	B, T			EP0	DDQ		
		4	J, U			EP0	DDQ		
37									LEVER, Gearshift

CHEROKEE (XJ)

SERIES	LINE	BODY	ENGINE	TRANSMISSION
L = LOWLINE	T = JEEP - 2WD B = JEEP - 2WD (RHD) J = JEEP - 4WD U = JEEP - 4WD (RHD)	72 = SPORT UTILITY 2-DR 74 = SPORT UTILITY 4-DR	ENC = 2.5L 4 Cyl Turbo Diesel Engine EPB = 2.5L 4 Cylinder Engine EPE = Engine - 2.5L Power Tech I-4 Cyl. ERH = 4.0L Power Tech I-6 Engine	DDQ = 5-Speed Manual Transmission DGS = 4-Speed Automatic AW4 Transmission DGO = ALL AUTOMATIC TRANSMISSIONS DBB = ALL MANUAL TRANSMISSIONS

Forks AX 5 (DDQ)
Figure AX-910

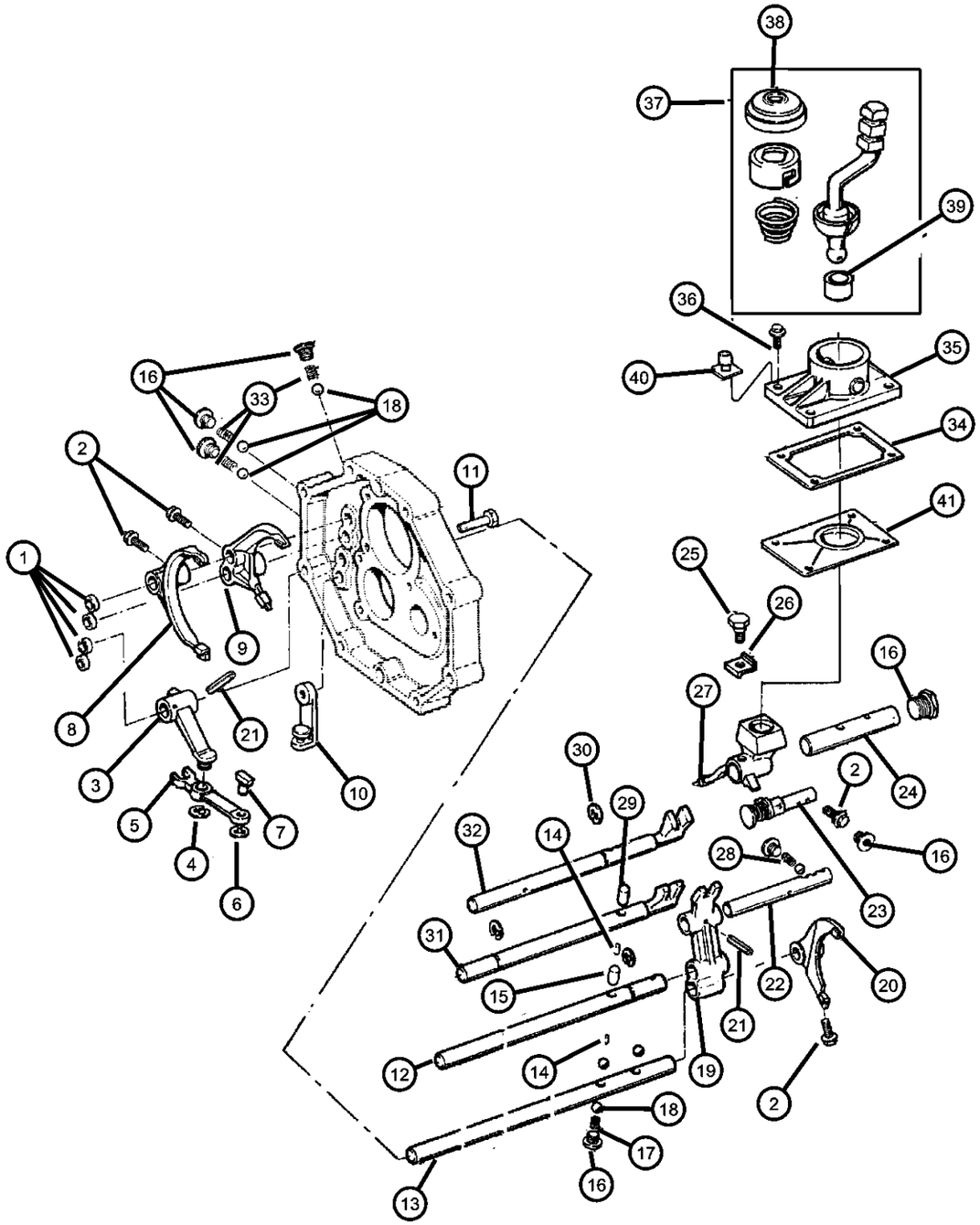

ITEM	PART NUMBER	QTY	LINE	SERIES	BODY	ENGINE	TRANS	TRIM	DESCRIPTION
	83500518	1	B, T			EP0	DDQ		
		1	J, U			EP0	DDQ		
38									BOOT, Gearshift
	83500520	1	B, T			EP0	DDQ		
		1	J, U			EP0	DDQ		
39									BUSHING, Shift Lever
	83500519	1	B, T			EP0	DDQ		
		1	J, U			EP0	DDQ		
40									CAP, Vent
	04864215	1	B, T			EP0	DDQ		52107746
		1	J, U			EP0	DDQ		52107747
		1	B, T			EP0	DDQ		52104546
		1	J, U			EP0	DDQ		52104547
41									SHIELD, Transmission
	04864216	1	B, T			EP0	DDQ		52107746
		1	J, U			EP0	DDQ		52107747
		1	B, T			EP0	DDQ		52104546
		1	J, U			EP0	DDQ		52104547

CHEROKEE (XJ)

SERIES	LINE	BODY	ENGINE	TRANSMISSION
L = LOWLINE	T = JEEP - 2WD B = JEEP - 2WD (RHD) J = JEEP - 4WD U = JEEP - 4WD (RHD)	72 = SPORT UTILITY 2-DR 74 = SPORT UTILITY 4-DR	ENC = 2.5L 4 Cyl Turbo Diesel Engine EPB = 2.5L 4 Cylinder Engine EPE = Engine - 2.5L Power Tech I-4 Cyl. ERH = 4.0L Power Tech I-6 Engine	DDQ = 5-Speed Manual Transmission DGS = 4-Speed Automatic AW4 Transmission DGO = ALL AUTOMATIC TRANSMISSIONS DBB = ALL MANUAL TRANSMISSIONS

Forks AX 15 (DDQ)
Figure AX-915

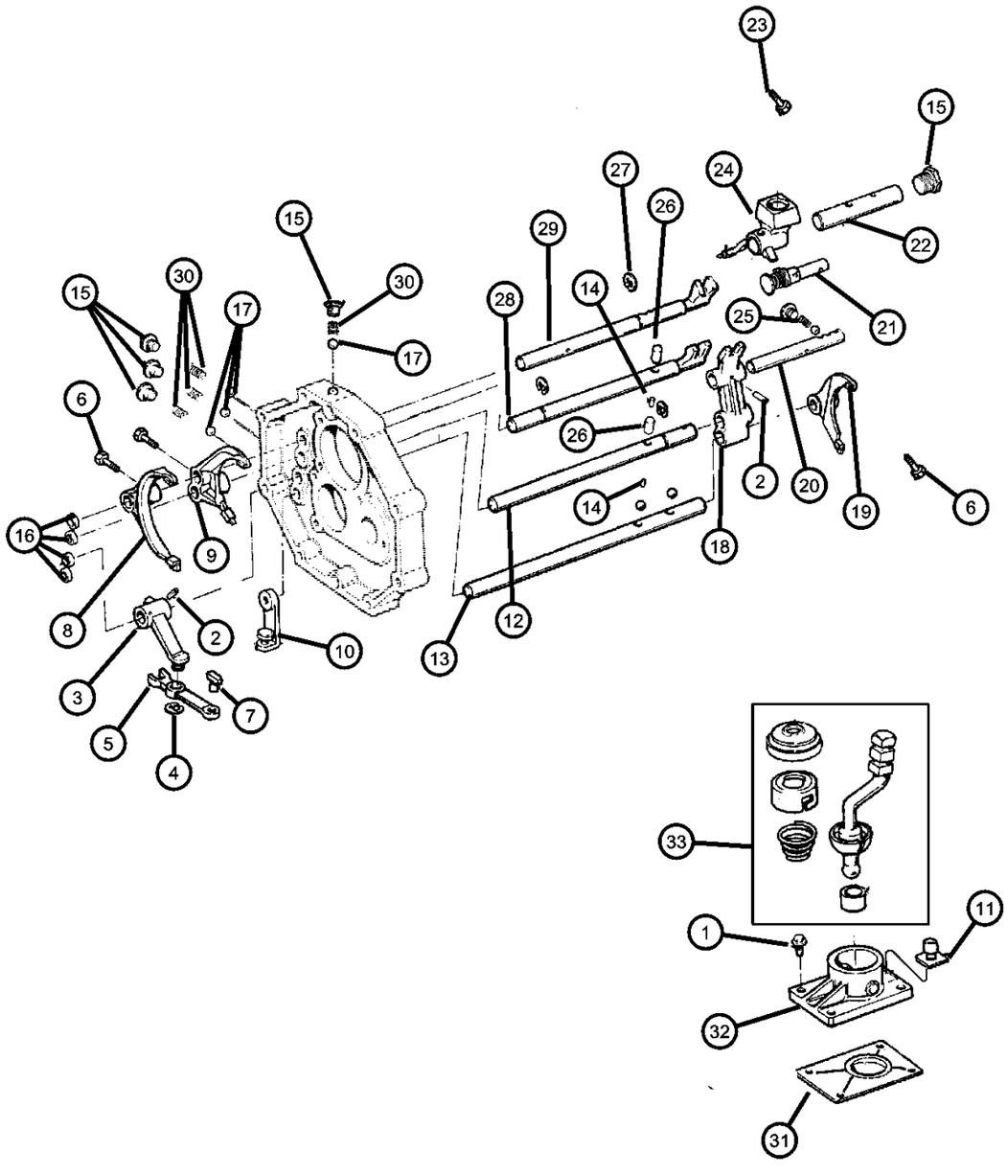

ITEM	PART NUMBER	QTY	LINE	SERIES	BODY	ENGINE	TRANS	TRIM	DESCRIPTION
Notes:									
DDQ = 5 Speed Manual Transmission									
ER0 = All 4.0L 6 Cylinder Gas Engines									
ENC = 2.5L 4 Cylinder Turbo Diesel Engine									
1									BOLT AND LOCK WASHER, Hex Head, M8x1.25x30
	83500525	4	B, T			ER0	DDQ		52107749
		4	J, U			EN0	DDQ		52107752
		4	J, U			ER0	DDQ		52108047
2									PIN, Shift Shaft
	83500540	3	B, T			ER0	DDQ		
		3	J, U			EN0	DDQ		
		2	J, U			ER0	DDQ		
3									FORK, Transmission
	05252056	1	B, T			ER0	DDQ		52107749
		1	J, U			EN0	DDQ		52107752
		1	J, U			ER0	DDQ		52108047
4									SNAP RING
	83500548	1	B, T			ER0	DDQ		52107749
		1	J, U			EN0	DDQ		52107752
		1	J, U			ER0	DDQ		52108047
5									ARM, Reverse Shift
	05252060	1	B, T			ER0	DDQ		52107749
		1	J, U			EN0	DDQ		52107752
		1	J, U			ER0	DDQ		52108047
6									BOLT AND WASHER, Gear Shift Fork
	05252214	3	B, T			ER0	DDQ		52107749
		3	J, U			EN0	DDQ		52107752
		3	J, U			ER0	DDQ		52108047
7									SHOE, Shift Lever
	05252062	1	B, T			ER0	DDQ		52107749
		1	J, U			EN0	DDQ		52107752
		1	J, U			ER0	DDQ		52108047
8									FORK, Transmission

CHEROKEE (XJ)

SERIES	LINE	BODY	ENGINE	TRANSMISSION
L = LOWLINE	T = JEEP - 2WD B = JEEP - 2WD (RHD) J = JEEP - 4WD U = JEEP - 4WD (RHD)	72 = SPORT UTILITY 2-DR 74 = SPORT UTILITY 4-DR	ENC = 2.5L 4 Cyl Turbo Diesel Engine EPB = 2.5L 4 Cylinder Engine EPE = Engine - 2.5L Power Tech I-4 Cyl. ERH = 4.0L Power Tech I-6 Engine	DDQ = 5-Speed Manual Transmission DGS = 4-Speed Automatic AW4 Transmission DGO = ALL AUTOMATIC TRANSMISSIONS DBB = ALL MANUAL TRANSMISSIONS

Forks AX 15 (DDQ)
Figure AX-915

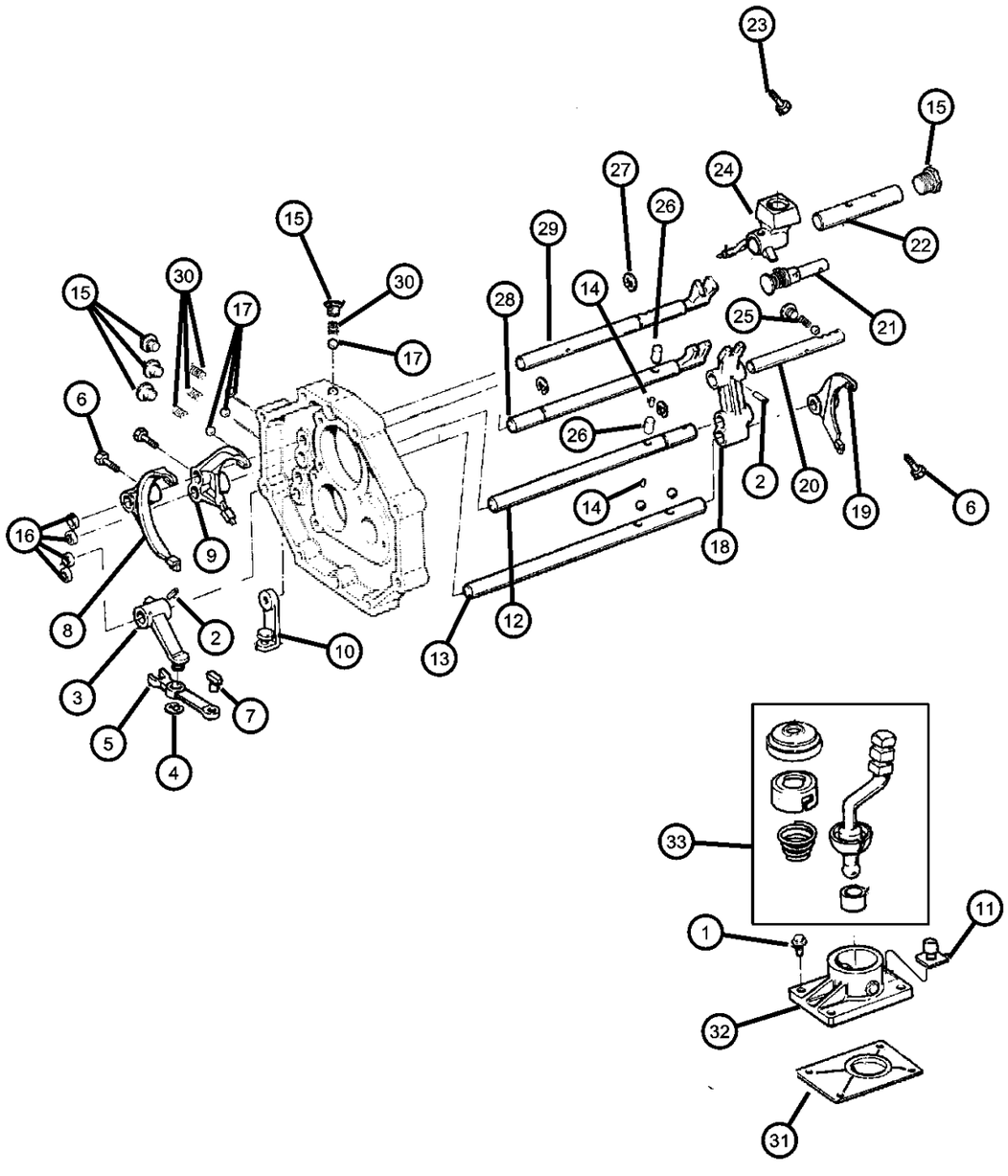

ITEM	PART NUMBER	QTY	LINE	SERIES	BODY	ENGINE	TRANS	TRIM	DESCRIPTION
	05252058	1	B, T			ER0	DDQ		52107749
		1	J, U			EN0	DDQ		52107752
		1	J, U			ER0	DDQ		52108047
9									FORK, Transmission
	05252057	1	B, T			ER0	DDQ		52107749
		1	J, U			EN0	DDQ		52107752
		1	J, U			ER0	DDQ		52108047
10									BRACKET, Reverse Shift Rod
	05252063	1	B, T			ER0	DDQ		52107749
		1	J, U			EN0	DDQ		52107752
		1	J, U			ER0	DDQ		52108047
11									CAP, Vent
	04864223	1	B, T			ER0	DDQ		52107749
		1	J, U			EN0	DDQ		52107752
		1	J, U			ER0	DDQ		52108047
12									SHAFT, Gear Shift Fork, Number 3
	05252070	1	B, T			ER0	DDQ		52107749
		1	J, U			EN0	DDQ		52107752
		1	J, U			ER0	DDQ		52108047
13									SHAFT, Gear Shift Fork, Number 4
	05252071	1	B, T			ER0	DDQ		52107749
		1	J, U			EN0	DDQ		52107752
		1	J, U			ER0	DDQ		52108047
14									PIN, Shift Shaft
	83500537	2	B, T			ER0	DDQ		52107749
		2	J, U			EN0	DDQ		52107752
		2	J			ER0			52108047
15									PLUG, Transmission
	83503109	6	B, T			ER0	DDQ		52107749
		7	J, U			EN0	DDQ		52107752
		5	J, U			ER0	DDQ		52108047
16									PLUG, Shift Rail
	83500503	4	J, U			ER0	DDQ		52108047

CHEROKEE (XJ)

SERIES	LINE	BODY	ENGINE	TRANSMISSION
L = LOWLINE	T = JEEP - 2WD B = JEEP - 2WD (RHD) J = JEEP - 4WD U = JEEP - 4WD (RHD)	72 = SPORT UTILITY 2-DR 74 = SPORT UTILITY 4-DR	ENC = 2.5L 4 Cyl Turbo Diesel Engine EPB = 2.5L 4 Cylinder Engine EPE = Engine - 2.5L Power Tech I-4 Cyl. ERH = 4.0L Power Tech I-6 Engine	DDQ = 5-Speed Manual Transmission DGS = 4-Speed Automatic AW4 Transmission DGO = ALL AUTOMATIC TRANSMISSIONS DBB = ALL MANUAL TRANSMISSIONS

Forks AX 15 (DDQ)
Figure AX-915

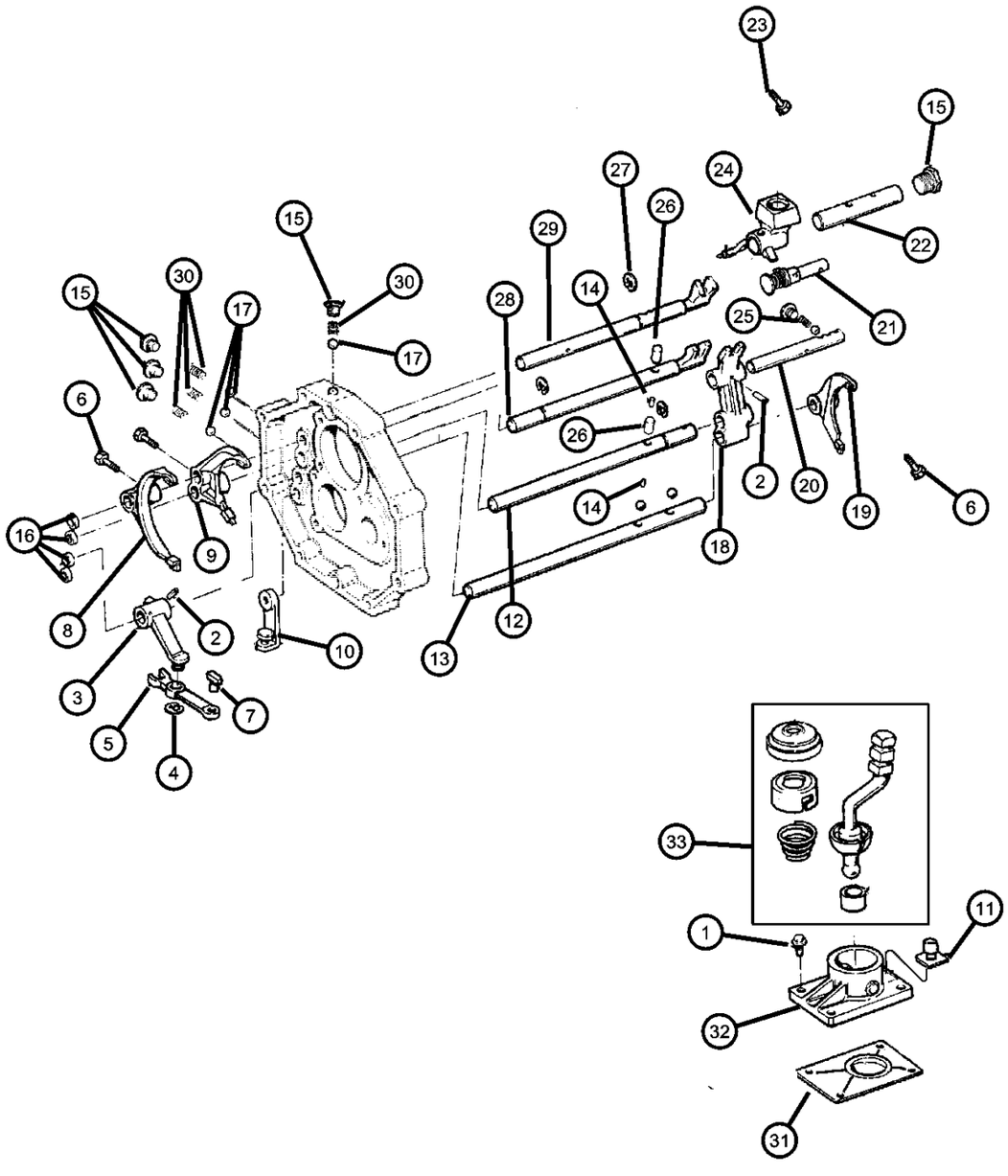

ITEM	PART NUMBER	QTY	LINE	SERIES	BODY	ENGINE	TRANS	TRIM	DESCRIPTION
		4	J, U			ER0	DDQ		52108047AB
		4	B, T			ER0	DDQ		52107749
		4	B, T			ER0	DDQ		52108048AB
		4	J, U			EN0	DDQ		52108121AB
		4	J, U			EN0	DDQ		52107752
17									BALL, Gearshift Fork Lock
	83500542	7	B, T			ER0	DDQ		52107749
		7	J, U			EN0	DDQ		52107752
		7	J, U			ER0	DDQ		52108047
18									HEAD, Shifter Shaft
	05252064	1	B, T			ER0	DDQ		52107749
		1	J, U			EN0	DDQ		52107752
		1	J, U			ER0	DDQ		52108047
19									FORK, Transmission
	05252059	1	B, T			ER0	DDQ		52107749
		1	J, U			EN0	DDQ		52107752
		1	J, U			ER0	DDQ		52108047
20									SHAFT, Gear Shift Fork, Number 5
	05252065	1	B, T			ER0	DDQ		52107749
		1	J, U			EN0	DDQ		52107752
		1	J, U			ER0	DDQ		52108047
21									PIN, Reverse
	83500635	1	B, T			ER0	DDQ		52107749
		1	J, U			EN0	DDQ		52107752
		1	J			ER0	DDQ		52108047
22									SHAFT, Shift Lever
	05252037	1	B, T			ER0	DDQ		52107749
		1	J, U			EN0	DDQ		52107752
		1	J, U			ER0	DDQ		52108047
23									BOLT, Hex Head, M8x1.25x22
	34201373	1	B, T			ER0	DDQ		52107749
		1	J, U			EN0	DDQ		52107752
		1	J, U			ER0	DDQ		52108047

CHEROKEE (XJ)

SERIES	LINE	BODY	ENGINE	TRANSMISSION
L = LOWLINE	T = JEEP - 2WD B = JEEP - 2WD (RHD) J = JEEP - 4WD U = JEEP - 4WD (RHD)	72 = SPORT UTILITY 2-DR 74 = SPORT UTILITY 4-DR	ENC = 2.5L 4 Cyl Turbo Diesel Engine EPB = 2.5L 4 Cylinder Engine EPE = Engine - 2.5L Power Tech I-4 Cyl. ERH = 4.0L Power Tech I-6 Engine	DDQ = 5-Speed Manual Transmission DGS = 4-Speed Automatic AW4 Transmission DGO = ALL AUTOMATIC TRANSMISSIONS DBB = ALL MANUAL TRANSMISSIONS

Forks AX 15 (DDQ)
Figure AX-915

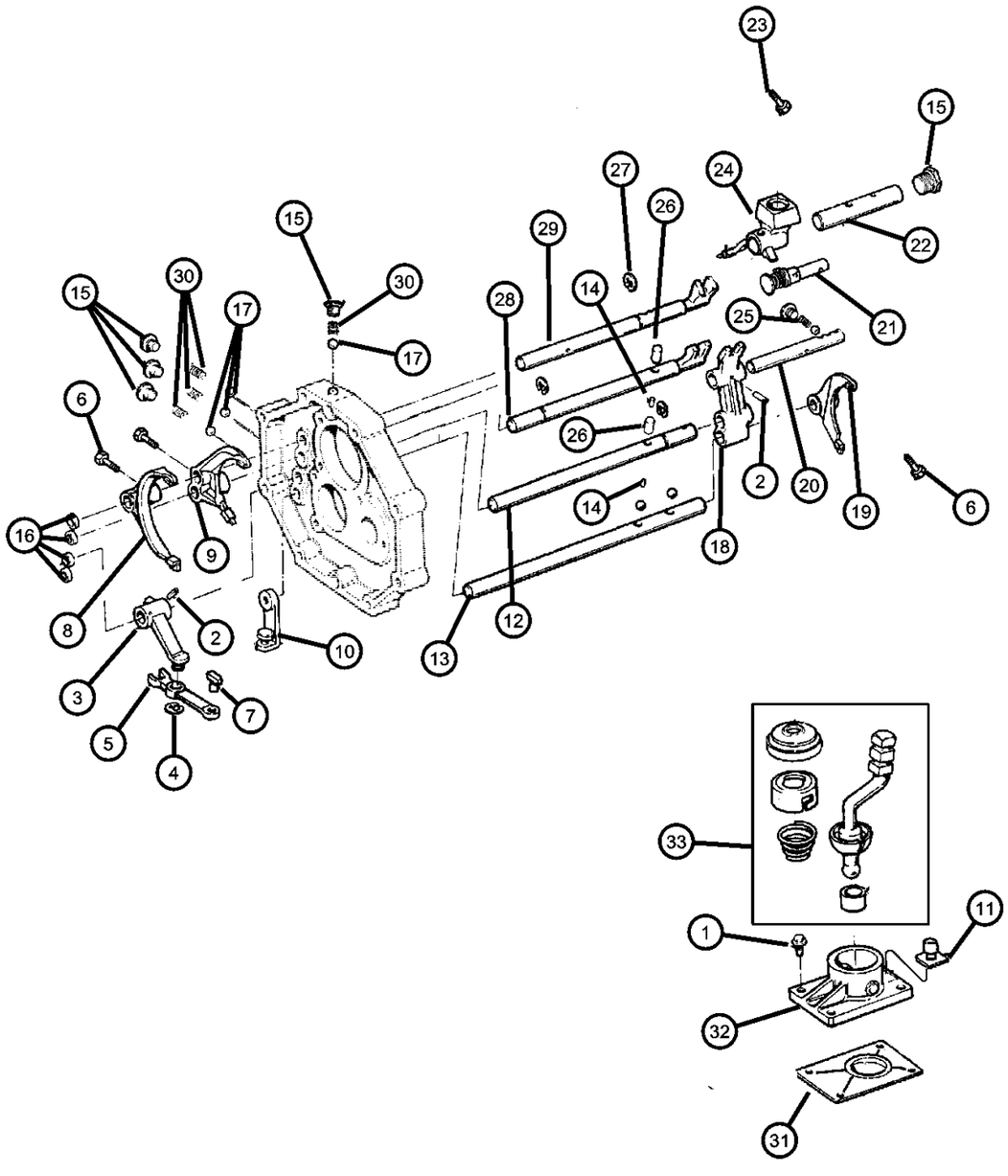

ITEM	PART NUMBER	QTY	LINE	SERIES	BODY	ENGINE	TRANS	TRIM	DESCRIPTION
24									HOUSING, Shift Lever
	05252041	1	B, T			ER0	DDQ		52107749
		1	J, U			EN0	DDQ		52107752
		1	J, U			ER0	DDQ		52108047
25									SPRING, Compression
	83500544	1	B, T			ER0	DDQ		52107749
		1	J, U			EN0	DDQ		52107752
		1	J, U			ER0	DDQ		52108047
26									PIN, Interlock, 30.3mm
	83500543	2	B, T			ER0	DDQ		52107749
		2	J, U			EN0	DDQ		52108047
		2	J, U			ER0	DDQ		52108047
27									SNAP RING
	05252076	3	B, T			ER0	DDQ		52107749
		3	J, U			EN0	DDQ		52107752
		3	J, U			ER0	DDQ		52108047
28									SHAFT, Gear Shift Fork, Number 1
	05252066	1	B, T			ER0	DDQ		52107749
		1	J, U			EN0	DDQ		52107752
		1	J, U			ER0	DDQ		52108047
29									SHAFT, Gear Shift Fork, Number 2
	05252068	1	B, T			ER0	DDQ		52107749
		1	J, U			EN0	DDQ		52107752
		1	J			ER0	DDQ		52108047
30									SPRING, Compression
	05252075	4	B, T			ER0	DDQ		52107749
		4	J, U			EN0	DDQ		52107752
		4	J, U			ER0	DDQ		52108047
31									SHIELD, Transmission
	04864224	1	B, T			ER0	DDQ		52107749
		1	J, U			EN0	DDQ		52107752
		1	J, U			ER0	DDQ		52108047
32									RETAINER, Control Shift Lever

CHEROKEE (XJ)

SERIES	LINE	BODY	ENGINE	TRANSMISSION
L = LOWLINE	T = JEEP - 2WD B = JEEP - 2WD (RHD) J = JEEP - 4WD U = JEEP - 4WD (RHD)	72 = SPORT UTILITY 2-DR 74 = SPORT UTILITY 4-DR	ENC = 2.5L 4 Cyl Turbo Diesel Engine EPB = 2.5L 4 Cylinder Engine EPE = Engine - 2.5L Power Tech I-4 Cyl. ERH = 4.0L Power Tech I-6 Engine	DDQ = 5-Speed Manual Transmission DGS = 4-Speed Automatic AW4 Transmission DGO = ALL AUTOMATIC TRANSMISSIONS DBB = ALL MANUAL TRANSMISSIONS

Forks AX 15 (DDQ)
Figure AX-915

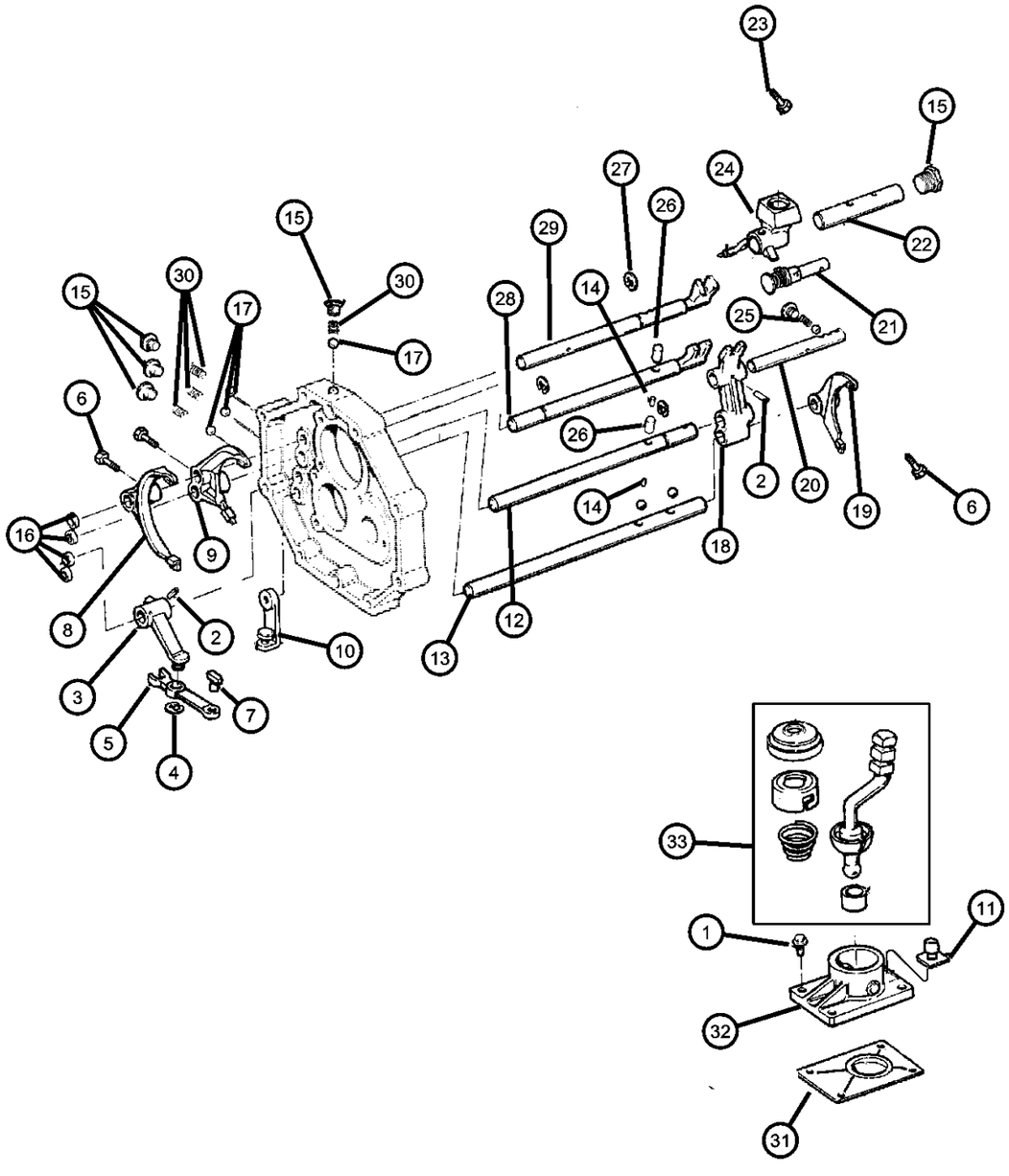

ITEM	PART NUMBER	QTY	LINE	SERIES	BODY	ENGINE	TRANS	TRIM	DESCRIPTION
	04864221	1	B, T			ER0	DDQ		
		1	J, U			EN0	DDQ		
		1	J, U			ER0	DDQ		
33									LEVER, Gearshift
	04874290	1	J, U			EN0	DDQ		52107752
	05252042	1	B, T			ER0	DDQ		52107749
		1	J, U			ER0	DDQ		52108047

CHEROKEE (XJ)

SERIES	LINE	BODY	ENGINE	TRANSMISSION
L = LOWLINE	T = JEEP - 2WD B = JEEP - 2WD (RHD) J = JEEP - 4WD U = JEEP - 4WD (RHD)	72 = SPORT UTILITY 2-DR 74 = SPORT UTILITY 4-DR	ENC = 2.5L 4 Cyl Turbo Diesel Engine EPB = 2.5L 4 Cylinder Engine EPE = Engine - 2.5L Power Tech I-4 Cyl. ERH = 4.0L Power Tech I-6 Engine	DDQ = 5-Speed Manual Transmission DGS = 4-Speed Automatic AW4 Transmission DGO = ALL AUTOMATIC TRANSMISSIONS DBB = ALL MANUAL TRANSMISSIONS

Gearshift Controls (DDQ)
Figure AX-1215

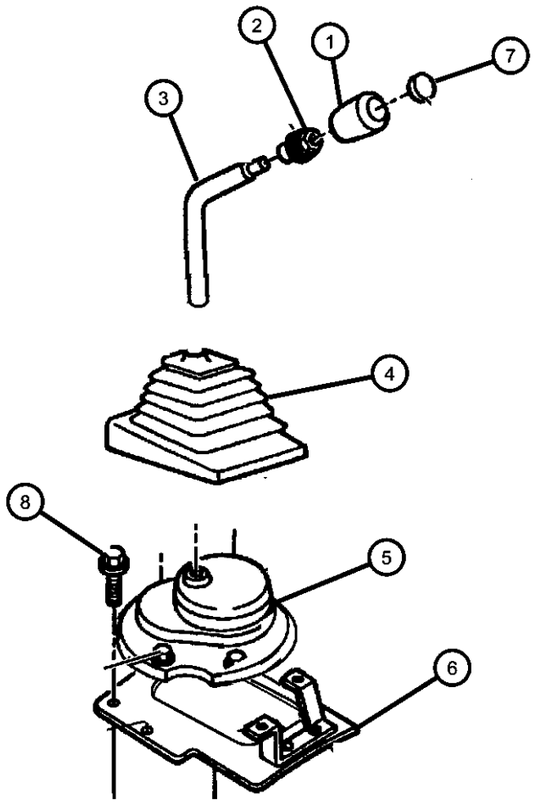

ITEM	PART NUMBER	QTY	LINE	SERIES	BODY	ENGINE	TRANS	TRIM	DESCRIPTION

Notes:
DDQ = 5 Speed Manual Transmission
DBB = All Manual Transmissions
DD0 = All 5 Speed Manual Transmissions
EP0 = All 2.5L Gas Engines
ER0 = All 4.0L 6 Cylinder Gas Engines
ENC = 2.5L 4 Cylinder Turbo Diesel Engine

1	52079175	1					DD0		KNOB, Gearshift
2	06502556	1					DBB		NUT, Hex, M10-1.5
3									LEVER, Gearshift
	52079224	1	B, U				DBB		RHD
	52079226	1	J, T				DBB		LHD
4	52104079AB	1					DBB		BOOT, Gear Shift Lever
5	52104217	1					DBB		BOOT, Gear Shift Lever
6	52104216	1					DBB		COVER, Floor Pan
7	04446921	1					DD0		INSERT, Transmission Shift Knob
8	J4001701	9					DBB		SCREW, Hex Self Tapping, .19-16x.50

CHEROKEE (XJ)

SERIES	LINE	BODY	ENGINE	TRANSMISSION
L = LOWLINE	T = JEEP - 2WD B = JEEP - 2WD (RHD) J = JEEP - 4WD U = JEEP - 4WD (RHD)	72 = SPORT UTILITY 2-DR 74 = SPORT UTILITY 4-DR	ENC = 2.5L 4 Cyl Turbo Diesel Engine EPB = 2.5L 4 Cylinder Engine EPE = Engine - 2.5L Power Tech I-4 Cyl. ERH = 4.0L Power Tech I-6 Engine	DDQ = 5-Speed Manual Transmission DGS = 4-Speed Automatic AW4 Transmission DGO = ALL AUTOMATIC TRANSMISSIONS DBB = ALL MANUAL TRANSMISSIONS

Group - 231

Transfer Case Model 231 [DHJ, DHK, DHN]

231-100 Transfer Case Assembly 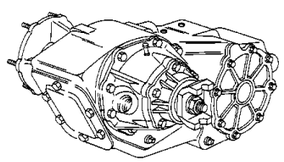	**231-1200** Gearshift Controls 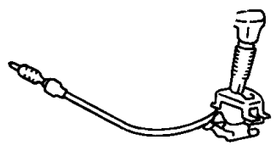	**231-200** Case and Related Parts 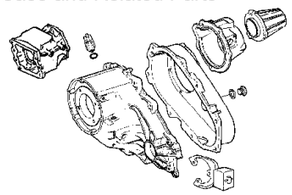	**231-400** Gear Train 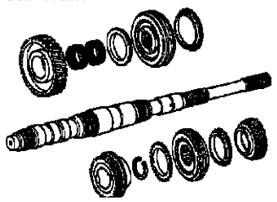
231-900 Fork and Rails 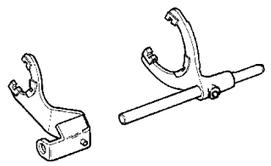			

Group - 231 Transfer Case Model 231 [DHJ, DHK, DHN]

Illustration Title — Group-Fig. No.

Transfer Case Assembly
Transfer Case Command Trac (DHN) ..... Fig. 231 - 110

Case and Related Parts
Case and Related Parts Command Trac (DHN) ..... Fig. 231 - 210

Gear Train
Gear Train Command Trac (DHN) ..... Fig. 231 - 410

Fork and Rails
Fork and Rails Command Trac (DHN) ..... Fig. 231 - 910

Gearshift Controls
Gearshift Controls Command Trac (DHN) ..... Fig. 231 - 1220

Transfer Case Command Trac (DHN)
Figure 231-110

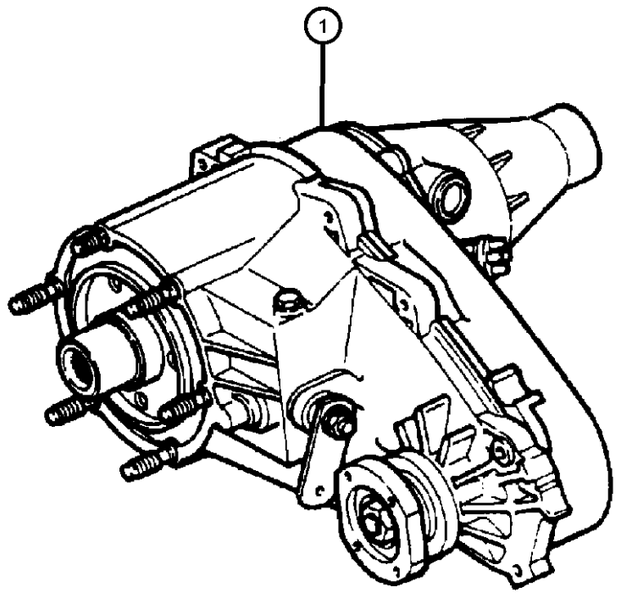

ITEM	PART NUMBER	QTY	LINE	SERIES	BODY	ENGINE	TRANS	TRIM	DESCRIPTION
Notes:									
EP0= All 2.5L, 4 Cylinder, Gas Engine									
ER0= All 4.0L., 6 Cylinder, Gas Engine									
EN0= All 4/5 Cylinder, Turbo Diesel Engine									
DDQ = 5 Speed Manual Transmission									
1									TRANSFER CASE, NV231
	52098913	1	J, U			EN0	DDQ		
	52099211	1	J, U			EP0	DG0		
	52099212	1	J, U			ER0			
	52099310	1	J, U			EP0	DDQ		

CHEROKEE (XJ)

SERIES	LINE	BODY	ENGINE	TRANSMISSION
L = LOWLINE	T = JEEP - 2WD B = JEEP - 2WD (RHD) J = JEEP - 4WD U = JEEP - 4WD (RHD)	72 = SPORT UTILITY 2-DR 74 = SPORT UTILITY 4-DR	ENC = 2.5L 4 Cyl Turbo Diesel Engine EPB = 2.5L 4 Cylinder Engine EPE = Engine - 2.5L Power Tech I-4 Cyl. ERH = 4.0L Power Tech I-6 Engine	DDQ = 5-Speed Manual Transmission DGS = 4-Speed Automatic AW4 Transmission DGO = ALL AUTOMATIC TRANSMISSIONS DBB = ALL MANUAL TRANSMISSIONS

Case and Related Parts Command Trac (DHN)
Figure 231-210

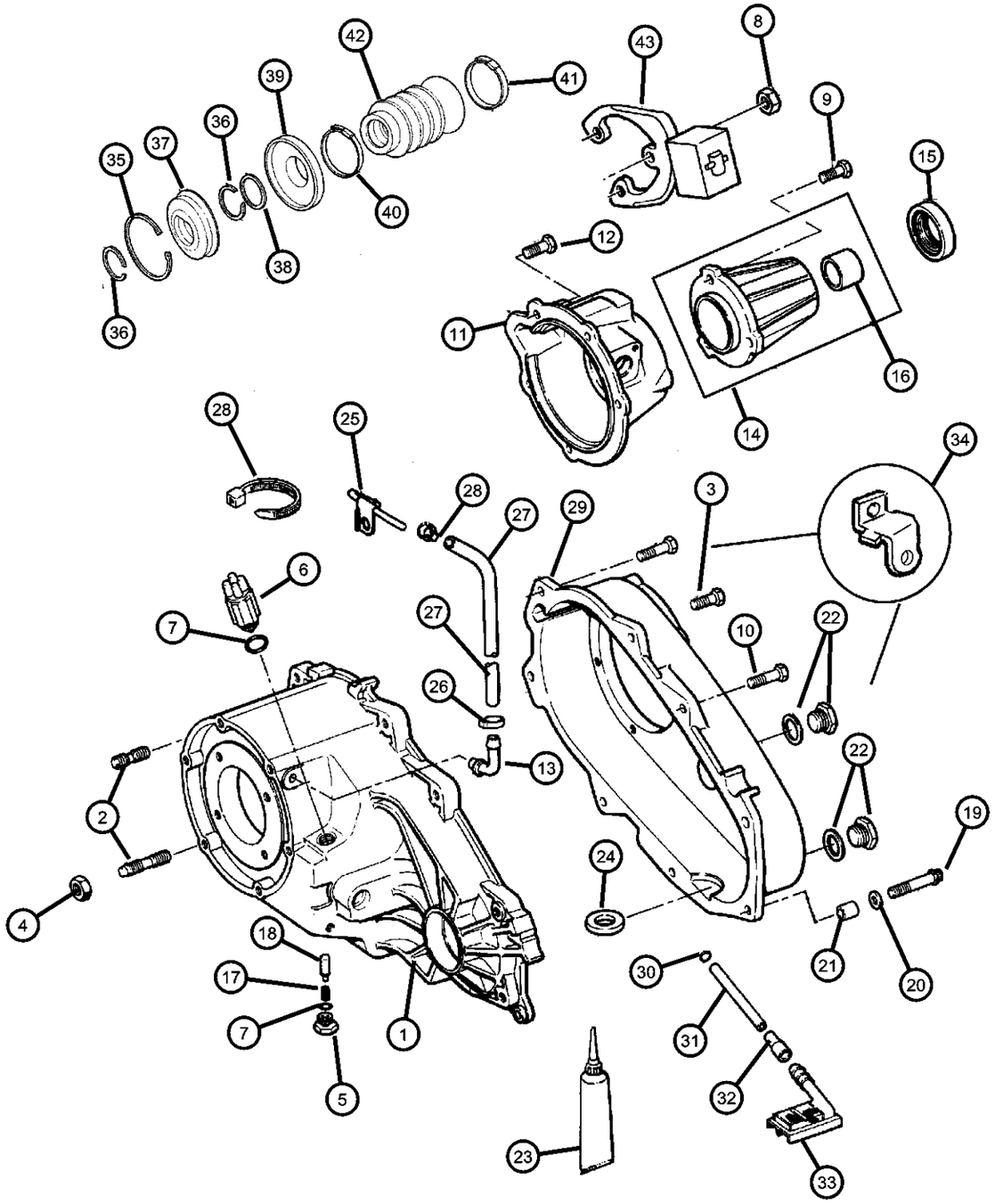

ITEM	PART NUMBER	QTY	LINE	SERIES	BODY	ENGINE	TRANS	TRIM	DESCRIPTION
Notes:									
EP0= All 2.5L, 4 Cylinder, Gas Engine									
ER0= All 4.0L., 6 Cylinder, Gas Engine									
EN0= All 4/5 Cylinder, Turbo Diesel Engine									
DDQ = 5 Speed Manual Transmission									
1									CASE, Transfer Front
	04796949	1	J, U			EN0	DDQ		52098913
	04798111	1	J			EP0	DDQ		52099310
		1	J			ER0			52099212
		1	J, U			EP0	DG0		52099211
2									STUD, M10x1.54x36
	04505365	6	J			EP0	DDQ		52099310
		6	J			ER0			52099212
		6	J			EP0			52099211
		6	J			EN0	DDQ		52098913
3									BOLT, Twelve Point Head, M10x1.5x48
	J8130979	1	J			EP0	DDQ		52099310
		1	J			ER0			52099212
		1	J			EP0	DG0		52099211
		1	J			EN0	DDQ		52098913
4	J4006681	6	J						NUT AND CONED WASHER, Hex, .375-24
5									SCREW
	04886473AA	1	J			EP0	DDQ		52099310
		1	J			ER0			52099212
		1	J			EP0	DG0		52099211
		1	J			EN0	DDQ		52098913
6									SWITCH, Transfer Case Mode
	J8134473	1	J			EP0	DDQ		52099310
		1	J			ER0			52099212
		1	J			EP0	DG0		52099211
		1	J			EN0	DDQ		52098913
7									SEAL, Vacuum Switch
	04338956	2	J			EP0	DDQ		52099310
		2	J			ER0			52099212

CHEROKEE (XJ)

SERIES	LINE	BODY	ENGINE	TRANSMISSION
L = LOWLINE	T = JEEP - 2WD B = JEEP - 2WD (RHD) J = JEEP - 4WD U = JEEP - 4WD (RHD)	72 = SPORT UTILITY 2-DR 74 = SPORT UTILITY 4-DR	ENC = 2.5L 4 Cyl Turbo Diesel Engine EPB = 2.5L 4 Cylinder Engine EPE = Engine - 2.5L Power Tech I-4 Cyl. ERH = 4.0L Power Tech I-6 Engine	DDQ = 5-Speed Manual Transmission DGS = 4-Speed Automatic AW4 Transmission DGO = ALL AUTOMATIC TRANSMISSIONS DBB = ALL MANUAL TRANSMISSIONS

Case and Related Parts Command Trac (DHN)
Figure 231-210

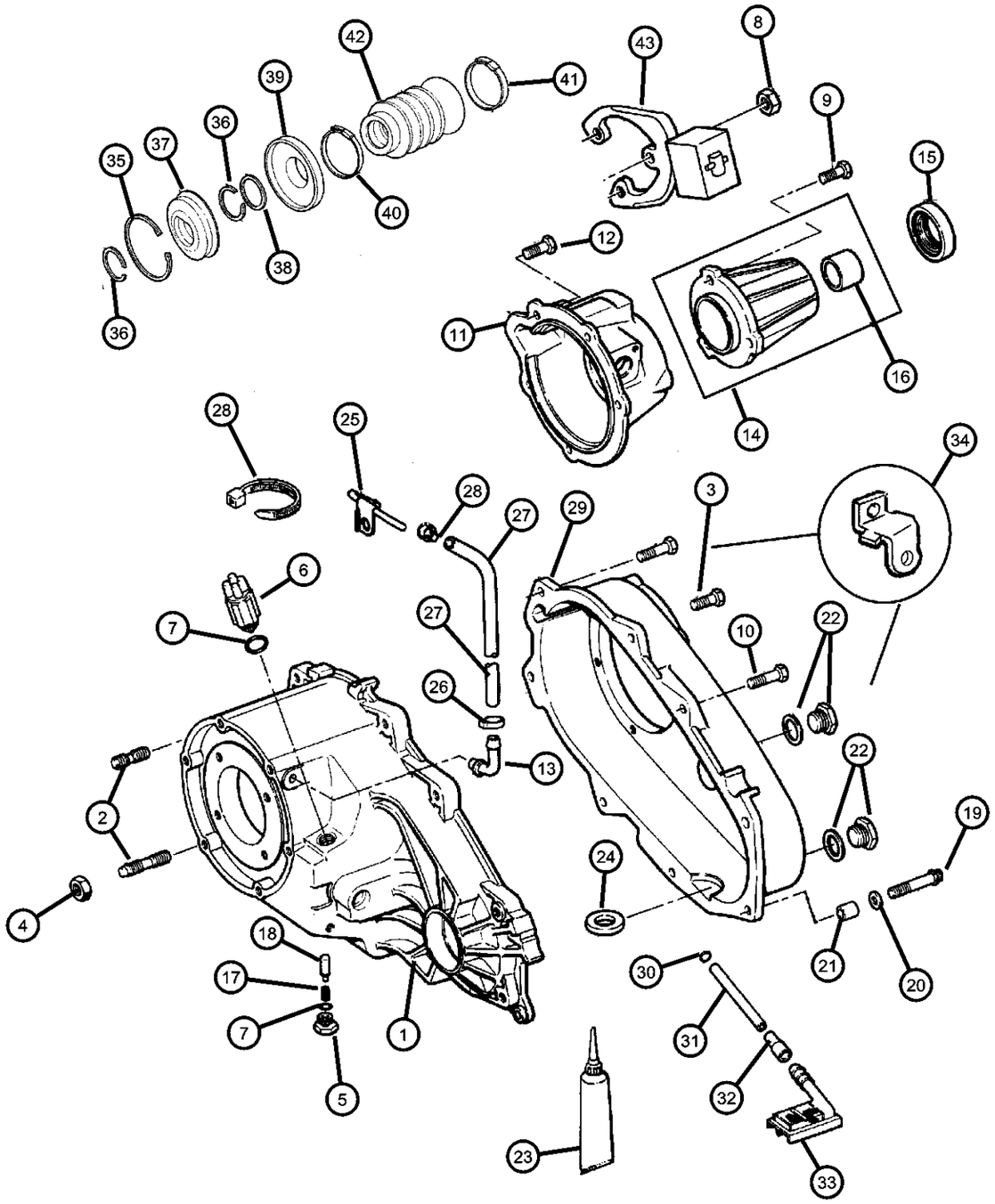

ITEM	PART NUMBER	QTY	LINE	SERIES	BODY	ENGINE	TRANS	TRIM	DESCRIPTION
		2	J			EP0	DG0		52099211
		1	J			EN0	DDQ		52098913
8									NUT, M10x1.5
	06502337	3	J, U				DGD		
		3	J, U			EN0	DDQ		
9	04720708	3	J			EN0	DDQ		STUD, 52098913
10									BOLT, Transfer Case
	04210617	5	J			EP0	DDQ		52099310
		5	J			ER0			52099212
		5	J			EP0	DG0		52099211
		5	J			EN0	DDQ		52098913
11									RETAINER, Transfer Case Rear
	04741243	1	J, U			EN0	DDQ		52098913
	04798115	1	J			EP0	DDQ		52099310
		1	J			ER0			52099212
		1	J, U			EP0	DG0		52099211
12									BOLT
	06500318	9	J			EP0	DDQ		52099310
		4	J			ER0			52099212
		4	J			EP0	DG0		52099211
		9	J			EN0	DDQ		52098913
13									VENT, Transfer Case
	04796910	1	J			EP0	DDQ		52099310
		1	J			ER0			52099212
		1	J			EP0	DG0		52099211
		1	J			EN0	DDQ		52098913
14	83503156	1	J, U			EN0	DDQ		EXTENSION, Transfer Case, 52098913
15	04638904	1	J			EN0	DDQ		SEAL, 52098913
16	J8134490	1	J, U			EN0	DDQ		BUSHING, Extension Housing, 52098913
17									SPRING, Shift Detent
	04638497	1	J			EP0	DDQ		52099310
		1	J			ER0			52099212

CHEROKEE (XJ)

SERIES	LINE	BODY	ENGINE	TRANSMISSION
L = LOWLINE	T = JEEP - 2WD B = JEEP - 2WD (RHD) J = JEEP - 4WD U = JEEP - 4WD (RHD)	72 = SPORT UTILITY 2-DR 74 = SPORT UTILITY 4-DR	ENC = 2.5L 4 Cyl Turbo Diesel Engine EPB = 2.5L 4 Cylinder Engine EPE = Engine - 2.5L Power Tech I-4 Cyl. ERH = 4.0L Power Tech I-6 Engine	DDQ = 5-Speed Manual Transmission DGS = 4-Speed Automatic AW4 Transmission DGO = ALL AUTOMATIC TRANSMISSIONS DBB = ALL MANUAL TRANSMISSIONS

AR = use ase required - = Non illustrrated part

Case and Related Parts Command Trac (DHN)
Figure 231-210

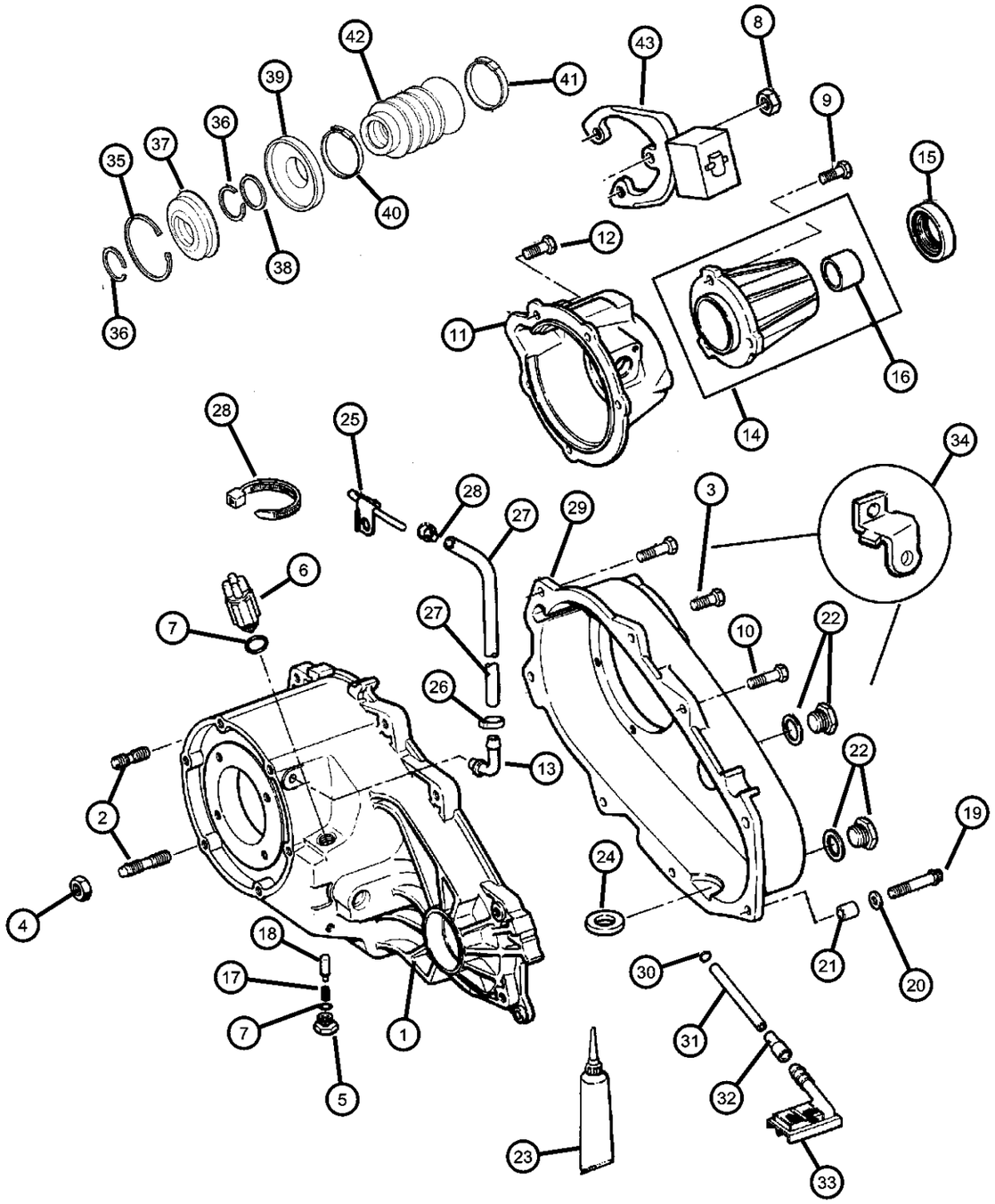

ITEM	PART NUMBER	QTY	LINE	SERIES	BODY	ENGINE	TRANS	TRIM	DESCRIPTION
		1	J			EP0	DG0		52099211
		1	J			EN0	DDQ		52098913
18									PLUNGER
	53008217	1	J			EP0	DDQ		52099310
		1	J			ER0			52099212
		1	J			EP0	DG0		52099211
		1	J			EN0	DDQ		52098913
19									BOLT, Hex Flange Head
	04210614	1	J			EP0	DDQ		52099310
		1	J			ER0			52099212
		1	J			EP0	DG0		52099211
		1	J			EN0	DDQ		52098913
20									WASHER, Flat
	04210983	1	J			EP0	DDQ		52099310
		1	J			ER0			52099212
		1	J			EP0	DG0		52099211
		1	J			EN0	DDQ		52098913
21									DOWEL, Transfer Case
	04116310	1	J			EP0	DDQ		52099310
		1	J			ER0			52099212
		1	J			EP0	DG0		52099211
		1	J			EN0	DDQ		52098913
22	04856641	2	J			EN0	DDQ		PLUG, Oil Fill, 52098913
23									SEALANT, RTV
	04318025	1	J, U			EP0	DG0		52099211
		1	J, U			EP0	DDQ		52099310
		1	J, U			ER0			52099212
		1	J, U			EN0	DDQ		52098913
24									MAGNET, Transmission
	03681601	1	J			EP0	DDQ		52099310
		1	J			ER0			52099212
		1	J			EP0	DG0		52099211
		1	J			EN0	DDQ		52098913

CHEROKEE (XJ)

SERIES	LINE	BODY	ENGINE	TRANSMISSION
L = LOWLINE	T = JEEP - 2WD B = JEEP - 2WD (RHD) J = JEEP - 4WD U = JEEP - 4WD (RHD)	72 = SPORT UTILITY 2-DR 74 = SPORT UTILITY 4-DR	ENC = 2.5L 4 Cyl Turbo Diesel Engine EPB = 2.5L 4 Cylinder Engine EPE = Engine - 2.5L Power Tech I-4 Cyl. ERH = 4.0L Power Tech I-6 Engine	DDQ = 5-Speed Manual Transmission DGS = 4-Speed Automatic AW4 Transmission DGO = ALL AUTOMATIC TRANSMISSIONS DBB = ALL MANUAL TRANSMISSIONS

Case and Related Parts Command Trac (DHN)
Figure 231-210

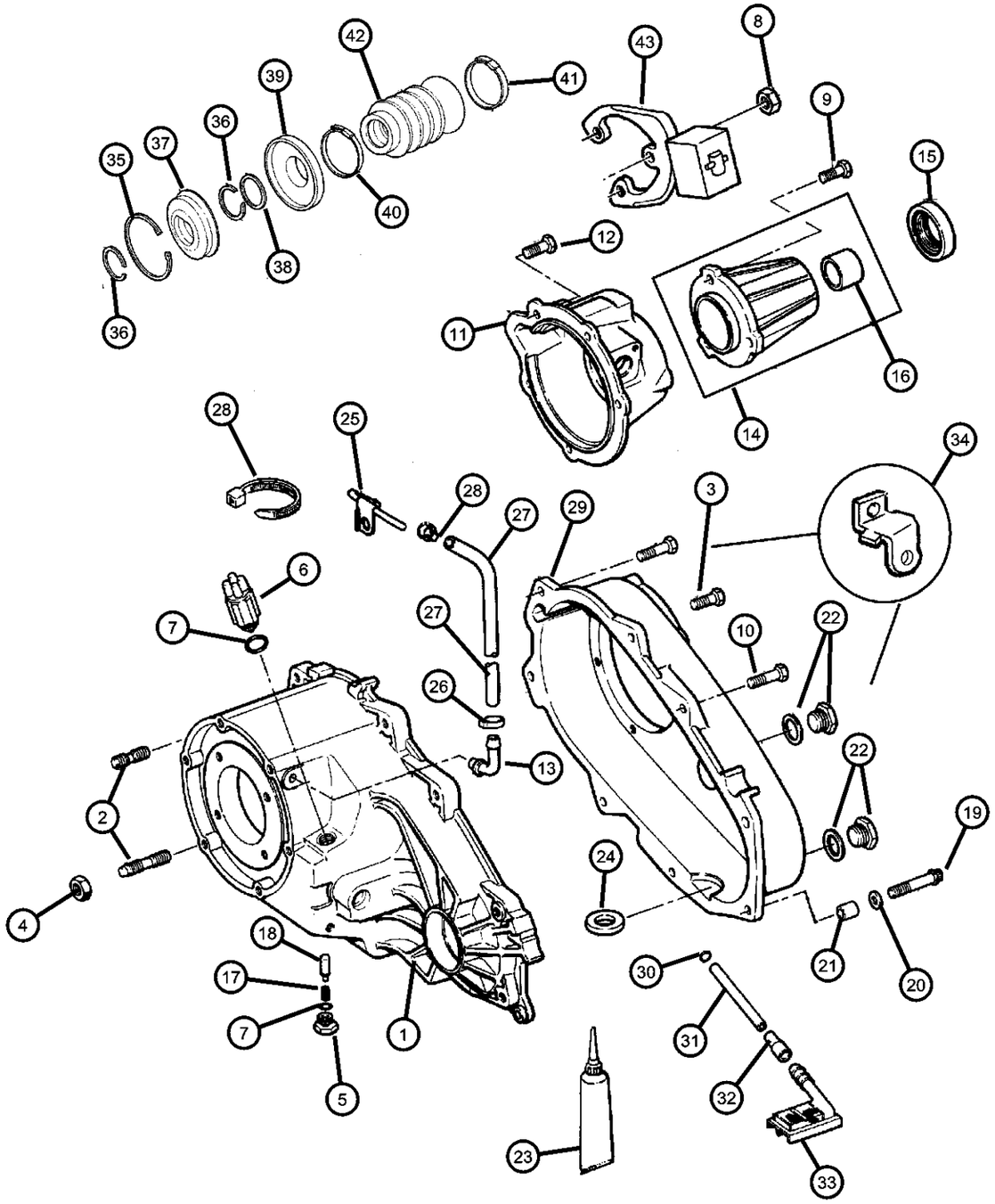

ITEM	PART NUMBER	QTY	LINE	SERIES	BODY	ENGINE	TRANS	TRIM	DESCRIPTION
25	J5352955	1	J, U						VENT, Axle
26	33000786	2	J, U						CLAMP, Oil Cooler Line
27	04443176	1							HOSE, Fuel, .31 I.D. 50 Foot Roll, Transfer Case
28	04641780	3							STRAP, Tie
29									CASE, Transfer Rear
	04886222AA	1	J			EP0	DDQ		52099310
		1	J			ER0			52099212
		1	J			EP0	DG0		52099211
		1	J			EN0	DDQ		52098913
30									SEAL, Oil
	04338942	1	J			EP0	DDQ		52099310
		1	J			ER0			52099212
		1	J			EP0	DG0		52099211
		1	J			EN0	DDQ		52098913
31									TUBE, Oil Pickup
	04338941	1	J			EP0	DDQ		52099310
		1	J			ER0			52099212
		1	J			EP0	DG0		52099211
		1	J, U			EN0	DDQ		52098913
32									CONNECTOR, Oil Tube Pickup
	04338944	1	J			EP0	DDQ		52099310
		1	J			ER0			52099212
		1	J			EP0	DG0		52099211
		1	J			EN0	DDQ		52098913
33									FILTER, Transfer Case Oil
	04338943	1	J			EP0	DDQ		52099310
		1	J			ER0			52099212
		1	J			EP0	DG0		52099211
		1	J			EN0	DDQ		52098913
34	52098522	1	J, U			EP0, ER0			BRACKET, Tube
35									SNAP RING
	04798116	1	J			EP0	DDQ		52099310

CHEROKEE (XJ)

SERIES	LINE	BODY	ENGINE	TRANSMISSION
L = LOWLINE	T = JEEP - 2WD B = JEEP - 2WD (RHD) J = JEEP - 4WD U = JEEP - 4WD (RHD)	72 = SPORT UTILITY 2-DR 74 = SPORT UTILITY 4-DR	ENC = 2.5L 4 Cyl Turbo Diesel Engine EPB = 2.5L 4 Cylinder Engine EPE = Engine - 2.5L Power Tech I-4 Cyl. ERH = 4.0L Power Tech I-6 Engine	DDQ = 5-Speed Manual Transmission DGS = 4-Speed Automatic AW4 Transmission DGO = ALL AUTOMATIC TRANSMISSIONS DBB = ALL MANUAL TRANSMISSIONS

Case and Related Parts Command Trac (DHN)
Figure 231-210

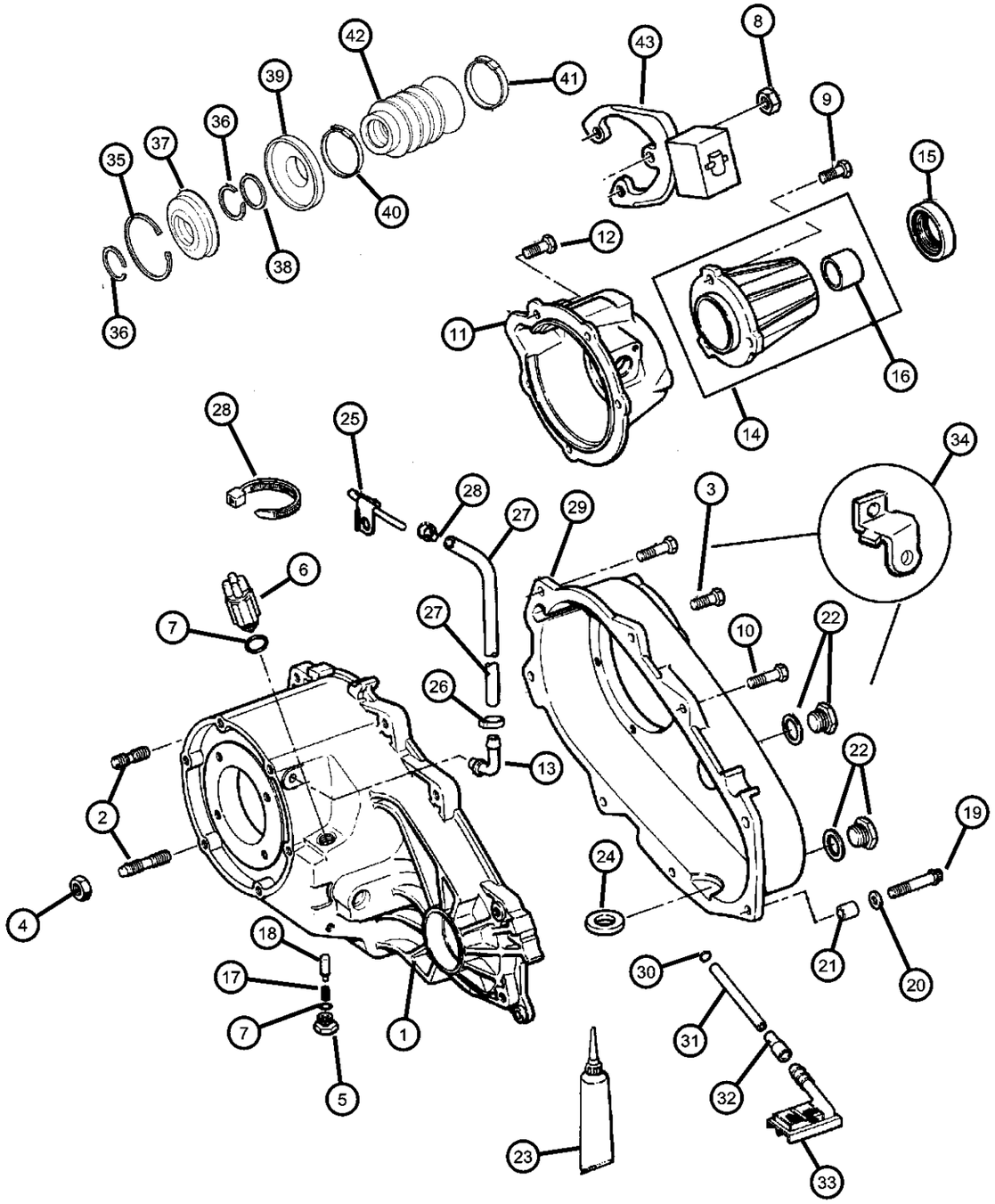

ITEM	PART NUMBER	QTY	LINE	SERIES	BODY	ENGINE	TRANS	TRIM	DESCRIPTION
		1	J			ER0			52099212
		1	J			EP0	DG0		52099211
36									SNAP RING
	J8134488	2	J			EP0	DDQ		52099310
		1	J			EN0	DDQ		52098913
37									SEAL, Output Shaft
	04798117	1	J			EP0	DDQ		52099310
		1	J			ER0			52099212
		1	J			EP0	DG0		52099211
38									WASHER
	04798118	1	J			EP0	DG0		52099211
		1	J			ER0			52099212
39									SLINGER, Oil
	04798119	1	J			ER0			52099212
		1	J			EP0	DG0		52099211
40									CLAMP, Boot
	04798121	1	J			ER0			52099212
		1	J			EP0	DG0		52099211
41	04798121	1	J			EP0	DG0		CLAMP, Boot, 52099211
42									BOOT, Driveshaft
	04798123	1	J			ER0			52099212
		1	J			EP0	DG0		52099211
43	52098509	1	J, U			ENC			DAMPER, Transfer Case

CHEROKEE (XJ)

SERIES	LINE	BODY	ENGINE	TRANSMISSION
L = LOWLINE	T = JEEP - 2WD B = JEEP - 2WD (RHD) J = JEEP - 4WD U = JEEP - 4WD (RHD)	72 = SPORT UTILITY 2-DR 74 = SPORT UTILITY 4-DR	ENC = 2.5L 4 Cyl Turbo Diesel Engine EPB = 2.5L 4 Cylinder Engine EPE = Engine - 2.5L Power Tech I-4 Cyl. ERH = 4.0L Power Tech I-6 Engine	DDQ = 5-Speed Manual Transmission DGS = 4-Speed Automatic AW4 Transmission DGO = ALL AUTOMATIC TRANSMISSIONS DBB = ALL MANUAL TRANSMISSIONS

Gear Train Command Trac (DHN)
Figure 231-410

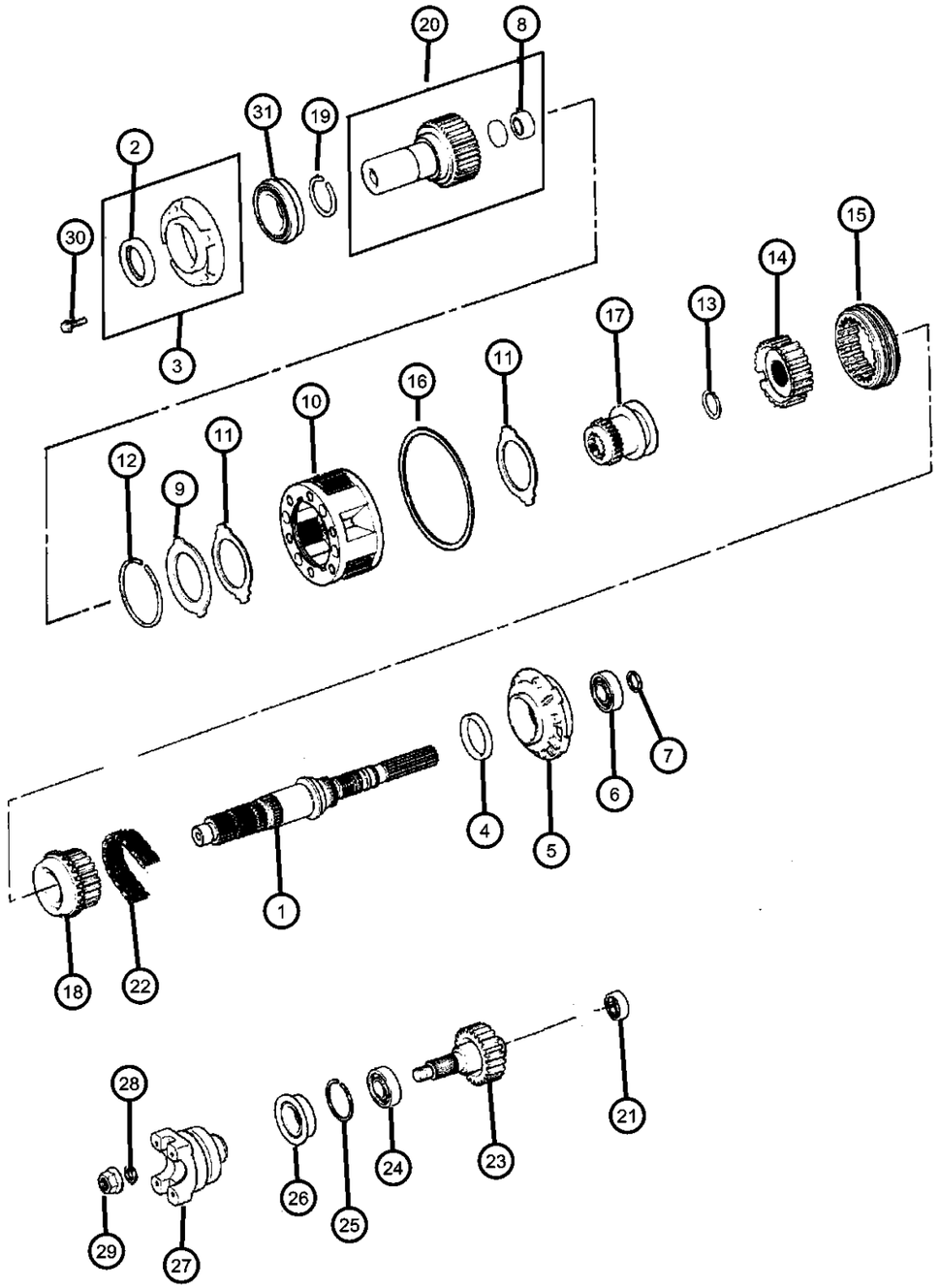

ITEM	PART NUMBER	QTY	LINE	SERIES	BODY	ENGINE	TRANS	TRIM	DESCRIPTION

Notes:
EP0= All 2.5L, 4 Cylinder, Gas Engine
ER0= All 4.0L., 6 Cylinder, Gas Engine
EN0= All 4/5 Cylinder, Turbo Diesel Engine
DDQ = 5 Speed Manual Transmission

1									MAINSHAFT, Transfer Case
	04796907	1	J, U			EN0	DDQ		52098913
	04798114	1	J			EP0	DDQ		52099310
		1	J			ER0			52099212
		1	J, U			EP0	DG0		52099211
2									SEAL, Input Gear
	04167929	1	J			EP0	DDQ		52099310
		1	J			ER0			52099212
		1	J			EP0	DG0		52099211
		1	J			EN0	DDQ		52098913
3									EXTENSION, Transfer Case
	04338973	1	J			EP0	DDQ		52099310
		1	J			ER0			52099212
		1	J			EP0	DG0		52099211
		1	J			EN0	DDQ		52098913
4									SEAL, Main Shaft
	04210603	1	J			EP0	DDQ		52099310
		1	J			ER0			52099212
		1	J			EP0	DG0		52099211
		1	J			EN0	DDQ		52098913
5									PUMP, Transfer Case Oil
	04338936	1	J			EP0	DDQ		52099310
		1	J			ER0			52099212
		1	J			EP0	DG0		52099211
		1	J			EN0	DDQ		52098913
6									BEARING
	04338892	2	J			EP0	DDQ		52099310
		2	J			ER0			52099212
		2	J			EP0	DG0		52099211

CHEROKEE (XJ)

SERIES	LINE	BODY	ENGINE	TRANSMISSION
L = LOWLINE	T = JEEP - 2WD B = JEEP - 2WD (RHD) J = JEEP - 4WD U = JEEP - 4WD (RHD)	72 = SPORT UTILITY 2-DR 74 = SPORT UTILITY 4-DR	ENC = 2.5L 4 Cyl Turbo Diesel Engine EPB = 2.5L 4 Cylinder Engine EPE = Engine - 2.5L Power Tech I-4 Cyl. ERH = 4.0L Power Tech I-6 Engine	DDQ = 5-Speed Manual Transmission DGS = 4-Speed Automatic AW4 Transmission DGO = ALL AUTOMATIC TRANSMISSIONS DBB = ALL MANUAL TRANSMISSIONS

Gear Train Command Trac (DHN)
Figure 231-410

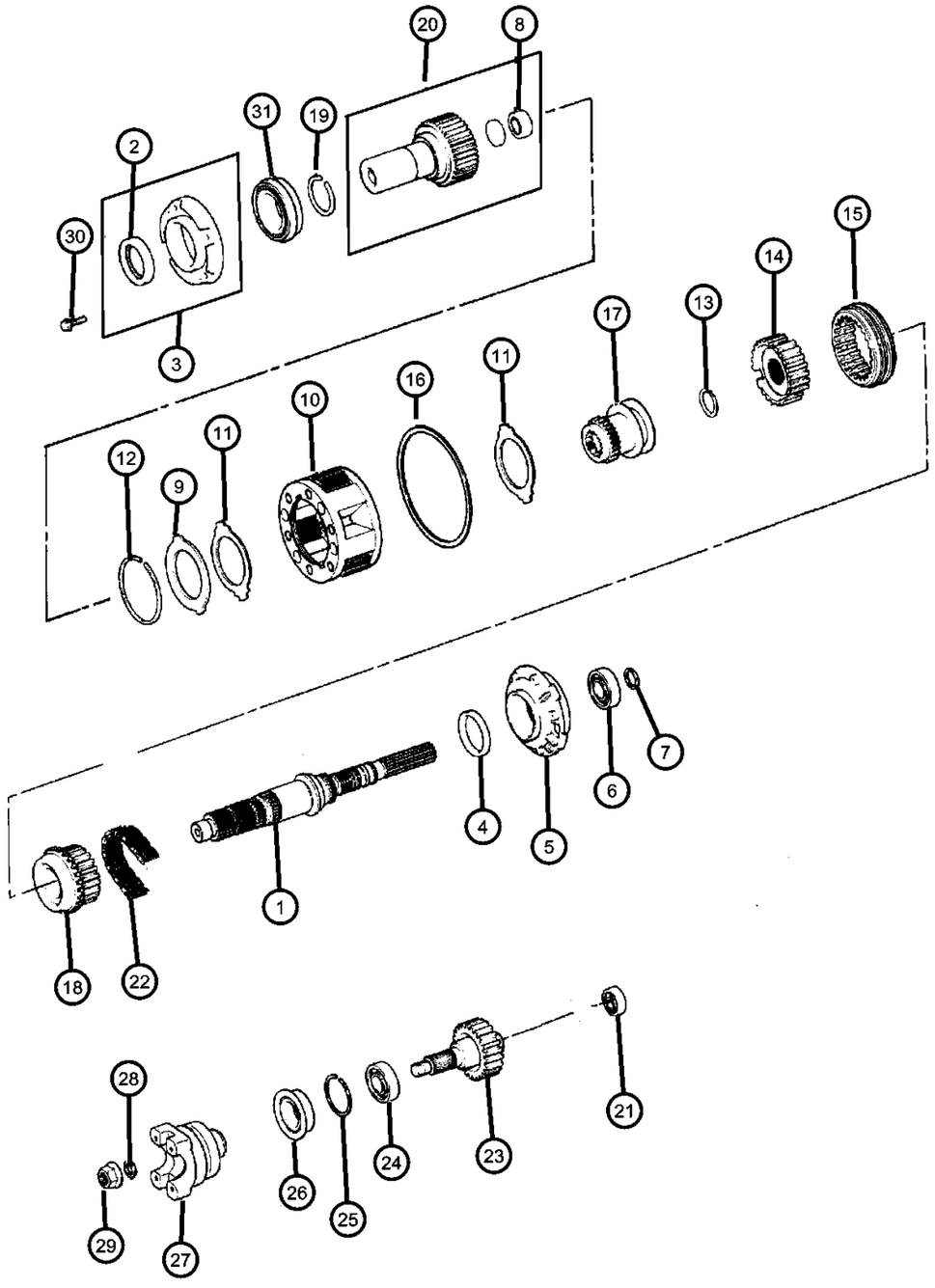

ITEM	PART NUMBER	QTY	LINE	SERIES	BODY	ENGINE	TRANS	TRIM	DESCRIPTION
		2	J			EN0	DDQ		52098913
7									SNAP RING
	J8134488	1	J			EP0	DG0		52099211
		1	J			EN0	DDQ		52098913
8									BEARING, Input Shaft
	83503507	1	J			EP0	DDQ		52099310
		1	J			ER0			52099212
		1	J			EP0	DG0		52099211
		1	J			EN0	DDQ		52098913
9									RING
	04338909	1	J			EP0	DDQ		52099310
		1	J			ER0			52099212
		1	J			EP0	DG0		52099211
		1	J			EN0	DDQ		52098913
10									GEAR, Low Range Planetary
	04796903	1	J			EP0	DDQ		52099310
		1	J			ER0			52099212
		1	J			EP0	DG0		52099211
		1	J			EN0	DDQ		52098913
11									THRUST WASHER, Planetary Carrier
	04338908	2	J			EP0	DDQ		52099310
		2	J			ER0			52099212
		2	J			EP0	DG0		52099211
		2	J			EN0	DDQ		52098913
12									SNAP RING
	04338910	1	J			EP0	DDQ		52099310
		1	J			ER0			52099212
		1	J			EP0	DG0		52099211
		1	J			EN0	DDQ		52098913
13									SNAP RING
	04338933	1	J			EP0	DDQ		52099310
		1	J			ER0			52099212

CHEROKEE (XJ)

SERIES	LINE	BODY	ENGINE	TRANSMISSION
L = LOWLINE	T = JEEP - 2WD B = JEEP - 2WD (RHD) J = JEEP - 4WD U = JEEP - 4WD (RHD)	72 = SPORT UTILITY 2-DR 74 = SPORT UTILITY 4-DR	ENC = 2.5L 4 Cyl Turbo Diesel Engine EPB = 2.5L 4 Cylinder Engine EPE = Engine - 2.5L Power Tech I-4 Cyl. ERH = 4.0L Power Tech I-6 Engine	DDQ = 5-Speed Manual Transmission DGS = 4-Speed Automatic AW4 Transmission DGO = ALL AUTOMATIC TRANSMISSIONS DBB = ALL MANUAL TRANSMISSIONS

Gear Train Command Trac (DHN)
Figure 231-410

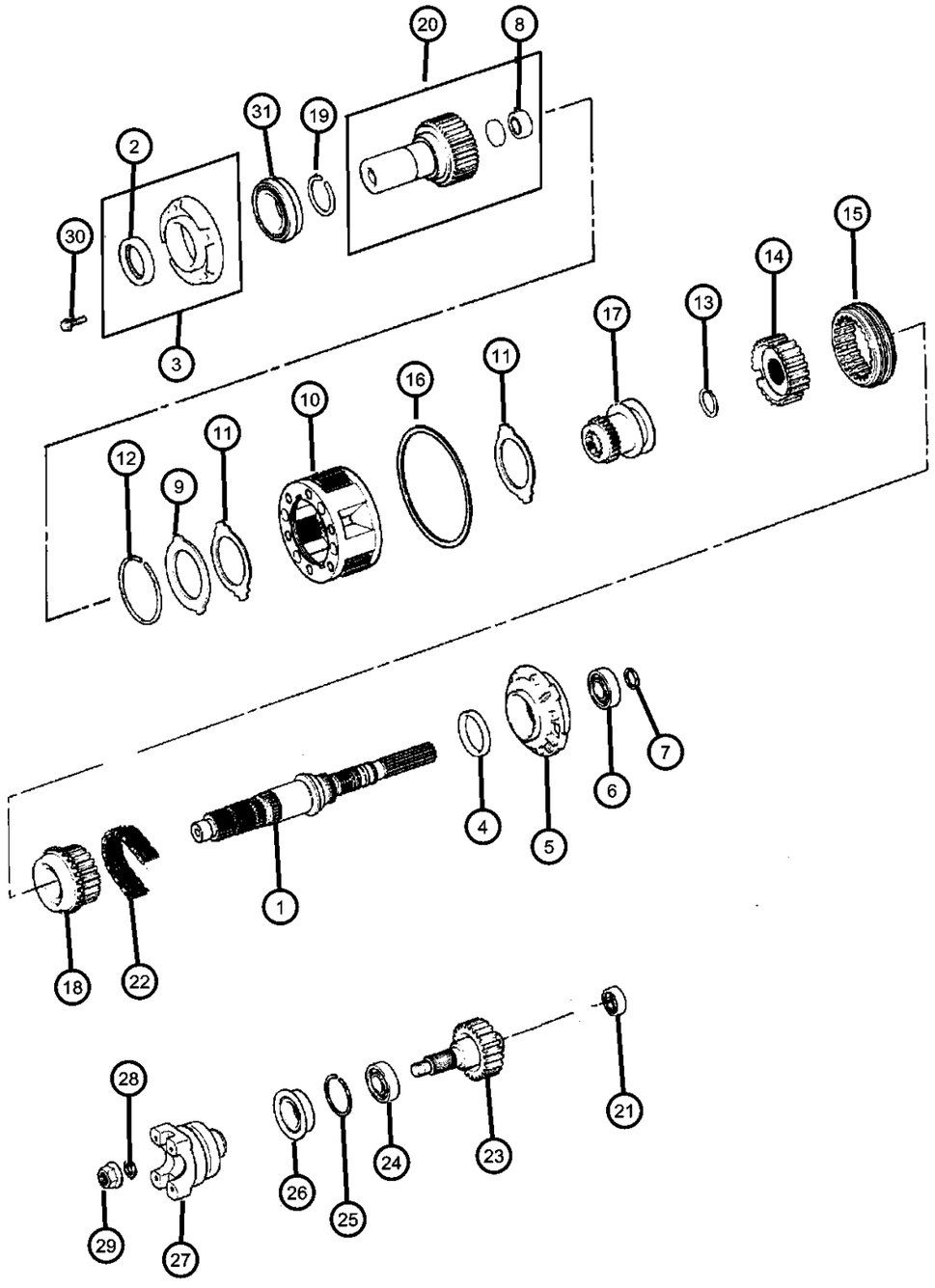

ITEM	PART NUMBER	QTY	LINE	SERIES	BODY	ENGINE	TRANS	TRIM	DESCRIPTION
		1	J			EP0	DG0		52099211
		1	J, U			EN0	DDQ		52098913
14									HUB, Sychronizer Mode
	04741240	1	J			EP0	DDQ		52099310
		1	J			ER0			52099212
		1	J			EP0	DG0		52099211
		1	J, U			EN0	DDQ		52098913
15									SLEEVE, Mode Synchronizer
	04796909	1	J			EP0	DDQ		52099310
		1	J			ER0			52099212
		1	J			EP0	DG0		52099211
		1	J, U			EN0	DDQ		52098913
16									SNAP RING, Annulus Gear
	04219065	1	J			EP0	DDQ		52099310
		1	J			ER0			52099212
		1	J			EP0	DG0		52099211
		1	J			EN0	DDQ		52098913
17									SLEEVE, Shift Range
	04796906	1	J, U			EN0	DDQ		52098913
	04797013	1	J			EP0	DDQ		52099310
		1	J			ER0			52099212
		1	J, U			EP0	DG0		52099211
18									SPROCKET, Transfer Case
	04796908	1	J			EP0	DDQ		52099310
		1	J			ER0			52099212
		1	J			EP0	DG0		52099211
		1	J, U			EN0	DDQ		52098913
19									SNAP RING
	03821558	1	J			EP0	DDQ		52099310
		1	J			ER0			52099212
		1	J			EP0	DG0		52099211
		1	J			EN0	DDQ		52098913
20									GEAR, Input

CHEROKEE (XJ)

SERIES	LINE	BODY	ENGINE	TRANSMISSION
L = LOWLINE	T = JEEP - 2WD B = JEEP - 2WD (RHD) J = JEEP - 4WD U = JEEP - 4WD (RHD)	72 = SPORT UTILITY 2-DR 74 = SPORT UTILITY 4-DR	ENC = 2.5L 4 Cyl Turbo Diesel Engine EPB = 2.5L 4 Cylinder Engine EPE = Engine - 2.5L Power Tech I-4 Cyl. ERH = 4.0L Power Tech I-6 Engine	DDQ = 5-Speed Manual Transmission DGS = 4-Speed Automatic AW4 Transmission DGO = ALL AUTOMATIC TRANSMISSIONS DBB = ALL MANUAL TRANSMISSIONS

AR = use ase required - = Non illustrrated part

Gear Train Command Trac (DHN)
Figure 231-410

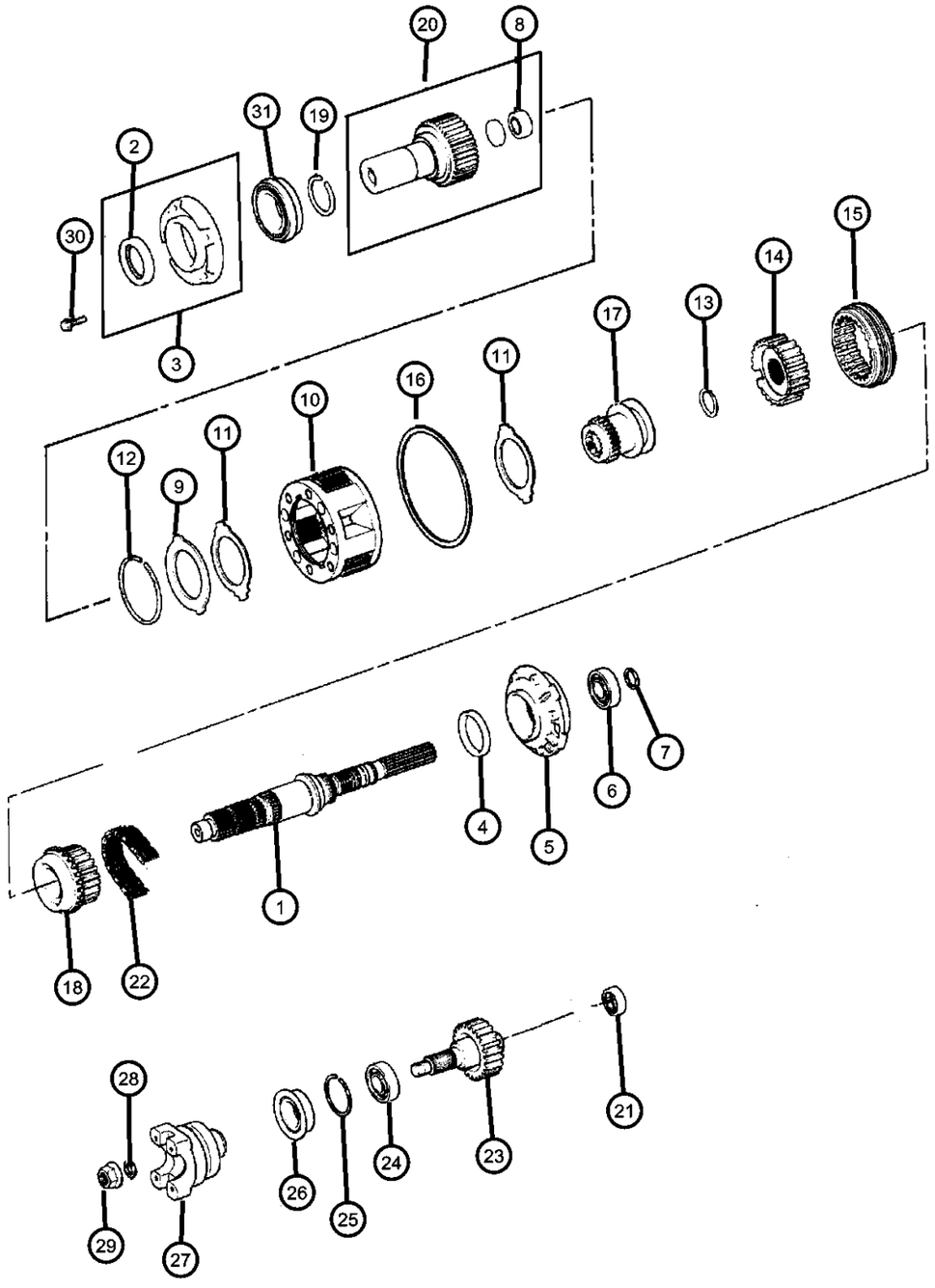

ITEM	PART NUMBER	QTY	LINE	SERIES	BODY	ENGINE	TRANS	TRIM	DESCRIPTION
	04796904	1	J, U			EN0	DDQ		52098913
	04796956	1	J, U			EP0	DDQ		52099310
	04796965	1	J, U			EP0	DG0		52099211
	04798113	1	J, U			ER0			52099212
21									BEARING, Output Shaft
	04269189	1	J			EP0	DDQ		52099310
		1	J			ER0			52099212
		1	J			EP0	DG0		52099211
		1	J			EN0	DDQ		52098913
22									CHAIN, Transfer Case
	04338935	1	J			EP0	DDQ		52099310
		1	J			ER0			52099212
		1	J			EP0	DG0		52099211
		1	J			EN0	DDQ		52098913
23									OUTPUT SHAFT, Transfer Case
	04338934	1	J			EP0	DDQ		52099310
		1	J			ER0			52099212
		1	J			EP0	DG0		52099211
		1	J			EN0	DDQ		52098913
24									BEARING
	04338892	2	J			EP0	DDQ		52099310
		2	J			ER0			52099212
		2	J			EP0	DG0		52099211
		2	J			EN0	DDQ		52098913
25									SNAP RING, Bearing
	04338894	1	J			EP0	DDQ		52099310
		1	J			ER0			52099212
		1	J			EP0	DG0		52099211
		1	J, U			EN0	DDQ		52098913
26									SEAL, Output
	04338893	1	J, U			EN0	DDQ		52098913
	04798112	1	J			EP0	DDQ		52099310
		1	J			ER0			52099212

CHEROKEE (XJ)

SERIES	LINE	BODY	ENGINE	TRANSMISSION
L = LOWLINE	T = JEEP - 2WD B = JEEP - 2WD (RHD) J = JEEP - 4WD U = JEEP - 4WD (RHD)	72 = SPORT UTILITY 2-DR 74 = SPORT UTILITY 4-DR	ENC = 2.5L 4 Cyl Turbo Diesel Engine EPB = 2.5L 4 Cylinder Engine EPE = Engine - 2.5L Power Tech I-4 Cyl. ERH = 4.0L Power Tech I-6 Engine	DDQ = 5-Speed Manual Transmission DGS = 4-Speed Automatic AW4 Transmission DGO = ALL AUTOMATIC TRANSMISSIONS DBB = ALL MANUAL TRANSMISSIONS

AR = use ase required - = Non illustrrated part

Gear Train Command Trac (DHN)
Figure 231-410

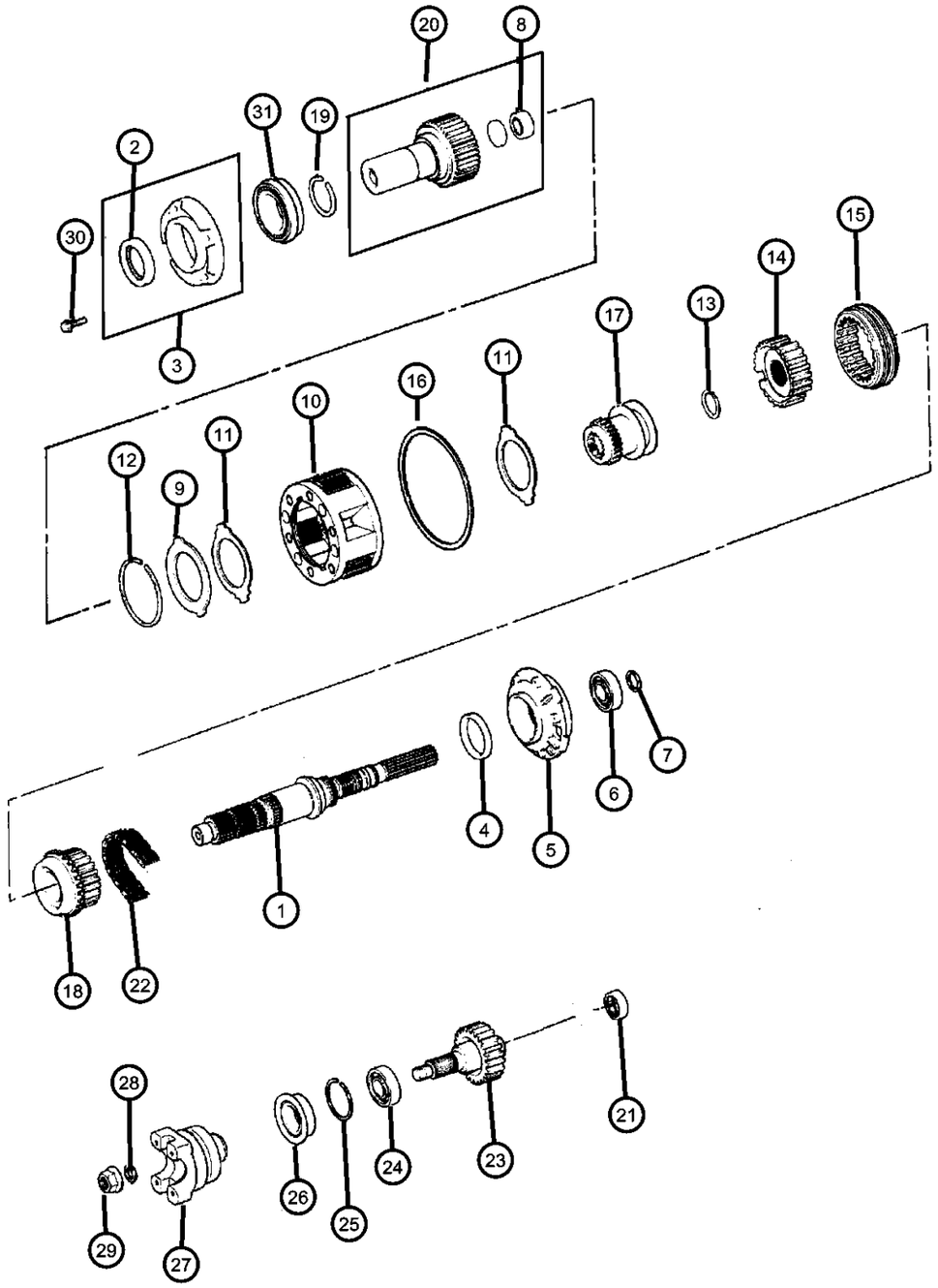

ITEM	PART NUMBER	QTY	LINE	SERIES	BODY	ENGINE	TRANS	TRIM	DESCRIPTION
		1	J, U			EP0	DG0		52099211
27									YOKE, Transfer Case Output
	04446494	1	J, U			EN0	DDQ		52098913
	04798120	1	J			EP0	DDQ		52099310
		1	J			ER0			52099212
		1	J, U			EP0	DG0		52099211
28									WASHER, Flat
	04446487	1	J			EP0	DDQ		52099310
		1	J			ER0			52099212
		1	J			EP0	DG0		52099211
		1	J, U			EN0	DDQ		52098913
29									NUT, Hex Flange
	04446488	1	J			EP0	DDQ		52099310
		1	J, U			EN0	DDQ		52098913
30									BOLT
	06500318	9	J			EP0	DDQ		52099310
		4	J			ER0			52099212
		4	J			EP0	DG0		52099211
		9	J			EN0	DDQ		52098913
31									BEARING, Input Gear
	04746155	1	J			EP0	DDQ		52099310
		1	J			ER0			52099212
		1	J			EP0	DG0		52099211
		1	J			EN0	DDQ		52098913

CHEROKEE (XJ)

SERIES	LINE	BODY	ENGINE	TRANSMISSION
L = LOWLINE	T = JEEP - 2WD B = JEEP - 2WD (RHD) J = JEEP - 4WD U = JEEP - 4WD (RHD)	72 = SPORT UTILITY 2-DR 74 = SPORT UTILITY 4-DR	ENC = 2.5L 4 Cyl Turbo Diesel Engine EPB = 2.5L 4 Cylinder Engine EPE = Engine - 2.5L Power Tech I-4 Cyl. ERH = 4.0L Power Tech I-6 Engine	DDQ = 5-Speed Manual Transmission DGS = 4-Speed Automatic AW4 Transmission DGO = ALL AUTOMATIC TRANSMISSIONS DBB = ALL MANUAL TRANSMISSIONS

Fork and Rails Command Trac (DHN)
Figure 231-910

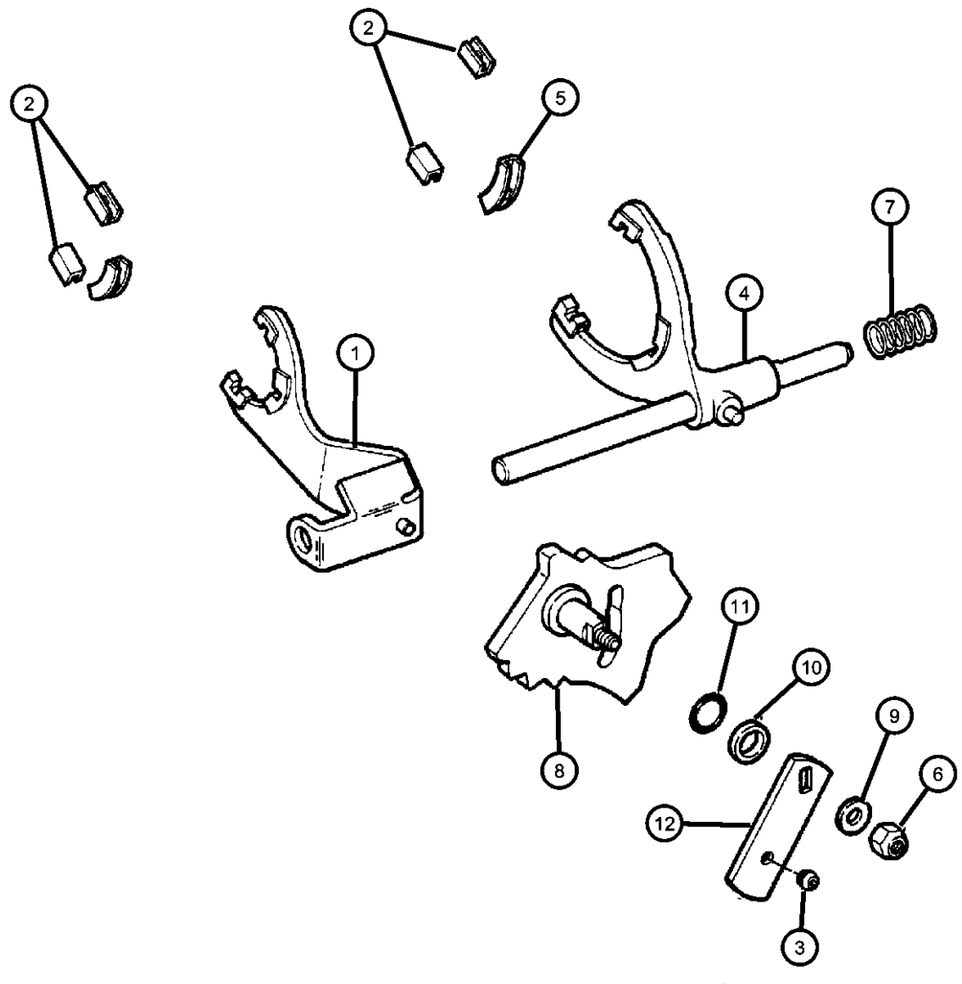

ITEM	PART NUMBER	QTY	LINE	SERIES	BODY	ENGINE	TRANS	TRIM	DESCRIPTION
Notes:									
EP0= All 2.5L, 4 Cylinder, Gas Engine									
ER0= All 4.0L., 6 Cylinder, Gas Engine									
EN0= All 4/5 Cylinder, Turbo Diesel Engine									
DDQ = 5 Speed Manual Transmission									
DG0 = All Automatic Transmissions									
1									FORK, Range
	04638913	1	J			EP0	DDQ		52099310
		1	J			ER0			52099212
		1	J			EP0	DG0		52099211
		1	J			EN0	DDQ		52098913
2									PAD, Shift Fork
	04167969	2	J			EN0	DDQ		
		2	J, U			EP0	DG0		
3									BUSHING, Shift Lever
	53004810	1	J			ER0			52099212
		1	J			EP0	DG0		52099211
		1	J			EN0	DDQ		52098913
4									FORK, Transfer Case Mode Shift
	04741237	1	J			EP0	DDQ		52099310
		1	J			ER0			52099212
		1	J			EP0	DG0		52099211
		1	J, U			EN0	DDQ		52098913
5									PAD, Shift Fork
	04219073	1	J			EP0	DDQ		52099310
		1	J			ER0			52099212
		1	J			EP0	DG0		52099211
		1	J, U			EN0	DDQ		52098913
6									NUT, .375-24
	00152345	1	J			EP0	DDQ		52099310
		1	J			ER0			52099212
		1	J			EP0	DG0		52099211
		1	J			EN0	DDQ		52098913
7									SPRING, Mode Shift Rail
	04338925	1	J			EP0	DDQ		52099310

CHEROKEE (XJ)

SERIES	LINE	BODY	ENGINE	TRANSMISSION
L = LOWLINE	T = JEEP - 2WD B = JEEP - 2WD (RHD) J = JEEP - 4WD U = JEEP - 4WD (RHD)	72 = SPORT UTILITY 2-DR 74 = SPORT UTILITY 4-DR	ENC = 2.5L 4 Cyl Turbo Diesel Engine EPB = 2.5L 4 Cylinder Engine EPE = Engine - 2.5L Power Tech I-4 Cyl. ERH = 4.0L Power Tech I-6 Engine	DDQ = 5-Speed Manual Transmission DGS = 4-Speed Automatic AW4 Transmission DGO = ALL AUTOMATIC TRANSMISSIONS DBB = ALL MANUAL TRANSMISSIONS

Fork and Rails Command Trac (DHN)
Figure 231-910

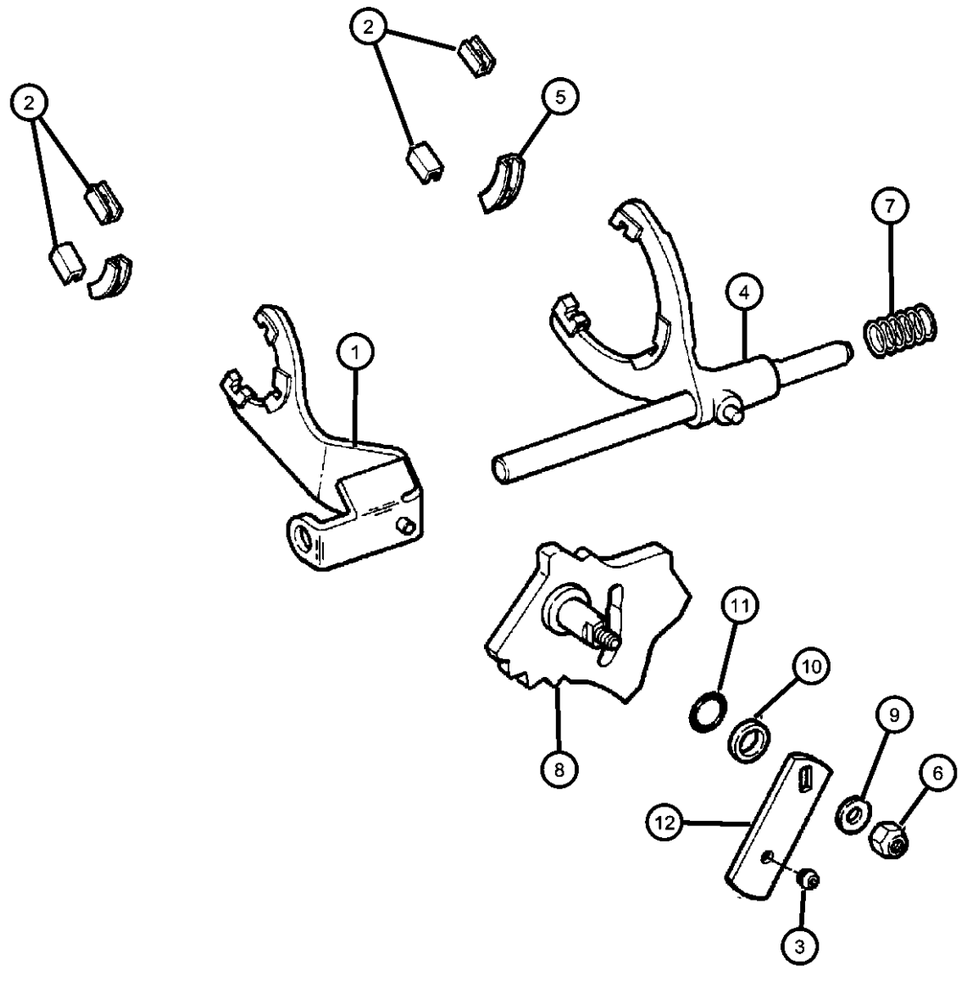

ITEM	PART NUMBER	QTY	LINE	SERIES	BODY	ENGINE	TRANS	TRIM	DESCRIPTION
		1	J			EP0	DG0		52099211
8									SECTOR, Transfer Case
	04638845	1	J			EP0	DDQ		52099310
		1	J			ER0			52099212
		1	J			EP0	DG0		52099211
		1	J, U			EN0	DDQ		52098913
9									WASHER, Flat
	S2436163	1	J, U			EP0	DDQ		52099310
		1	J, U			EP0	DG0		52099211
		1	J, U			ER0			52099212
		1	J, U			EN0	DDQ		52098913
10									RETAINER, Rear Clutch
	04167964	1	J			EP0	DDQ		52099310
		1	J			ER0			52099212
		1	J			EP0	DG0		52099211
		1	J			EN0	DDQ		52098913
11									SEAL, O-Ring
	04167963	1	J			EP0	DDQ		52099310
		1	J			ER0			52099212
		1	J			EP0	DG0		52099211
		1	J			EN0	DDQ		52098913
12									LEVER, Selector
	04897185AA	1	J			EP0	DDQ		52099310
		1	J			ER0			52099212
		1	J			EP0	DG0		52099211
		1	J, U			EN0	DDQ		52098913

CHEROKEE (XJ)

SERIES	LINE	BODY	ENGINE	TRANSMISSION
L = LOWLINE	T = JEEP - 2WD B = JEEP - 2WD (RHD) J = JEEP - 4WD U = JEEP - 4WD (RHD)	72 = SPORT UTILITY 2-DR 74 = SPORT UTILITY 4-DR	ENC = 2.5L 4 Cyl Turbo Diesel Engine EPB = 2.5L 4 Cylinder Engine EPE = Engine - 2.5L Power Tech I-4 Cyl. ERH = 4.0L Power Tech I-6 Engine	DDQ = 5-Speed Manual Transmission DGS = 4-Speed Automatic AW4 Transmission DGO = ALL AUTOMATIC TRANSMISSIONS DBB = ALL MANUAL TRANSMISSIONS

Gearshift Controls Command Trac (DHN)
Figure 231-1220

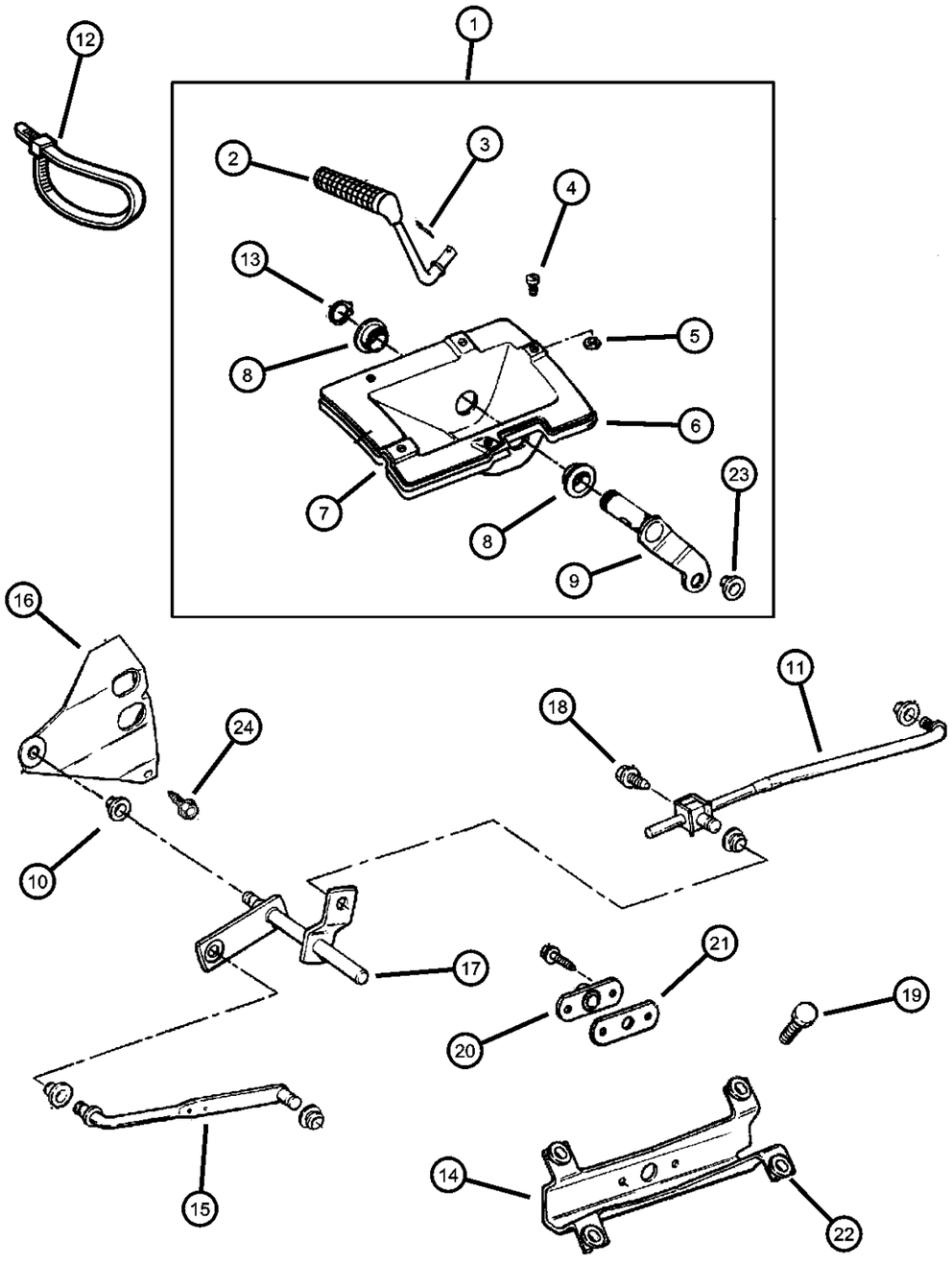

ITEM	PART NUMBER	QTY	LINE	SERIES	BODY	ENGINE	TRANS	TRIM	DESCRIPTION

Notes:
EP0= All 2.5L, 4 Cylinder, Gas Engine
ER0= All 4.0L., 6 Cylinder, Gas Engine
ENC= 2.5L 4 Cylinder Turbo Diesel Engine
DDQ = 5 Speed Manual Transmission
DG0 = All Automatic Transmission
DBB = All Manual Transmissions

1									SHIFTER, Transfer Case
	52104100AB	1	J						
	52104101AB	1	U						
2									LEVER, Transfer Case Shifter
	52079256	1	J						
		1	U						
3									PIN, Cotter
	J4006723	1	J						
		1	U						
4									FASTENER, Push On
	52077650	1	U						
	53000809	1	J						
5									NUT, Push, M5
	52077671	1	J						
		1	U						
6									BOOT, Transfer Case Lever
	52104019	1	J						
		1	U						
7									HOUSING, Shift Lever
	53001284	1	J						
		1	U						
8									BUSHING, Shift Control
	53000639	2	J						
		1	U						
9									LEVER, Transfer Case
	53005150AC	1	J						
		1	U						
10									BUSHING, Shift Lever

CHEROKEE (XJ)

SERIES	LINE	BODY	ENGINE	TRANSMISSION
L = LOWLINE	T = JEEP - 2WD B = JEEP - 2WD (RHD) J = JEEP - 4WD U = JEEP - 4WD (RHD)	72 = SPORT UTILITY 2-DR 74 = SPORT UTILITY 4-DR	ENC = 2.5L 4 Cyl Turbo Diesel Engine EPB = 2.5L 4 Cylinder Engine EPE = Engine - 2.5L Power Tech I-4 Cyl. ERH = 4.0L Power Tech I-6 Engine	DDQ = 5-Speed Manual Transmission DGS = 4-Speed Automatic AW4 Transmission DGO = ALL AUTOMATIC TRANSMISSIONS DBB = ALL MANUAL TRANSMISSIONS

Gearshift Controls Command Trac (DHN)
Figure 231-1220

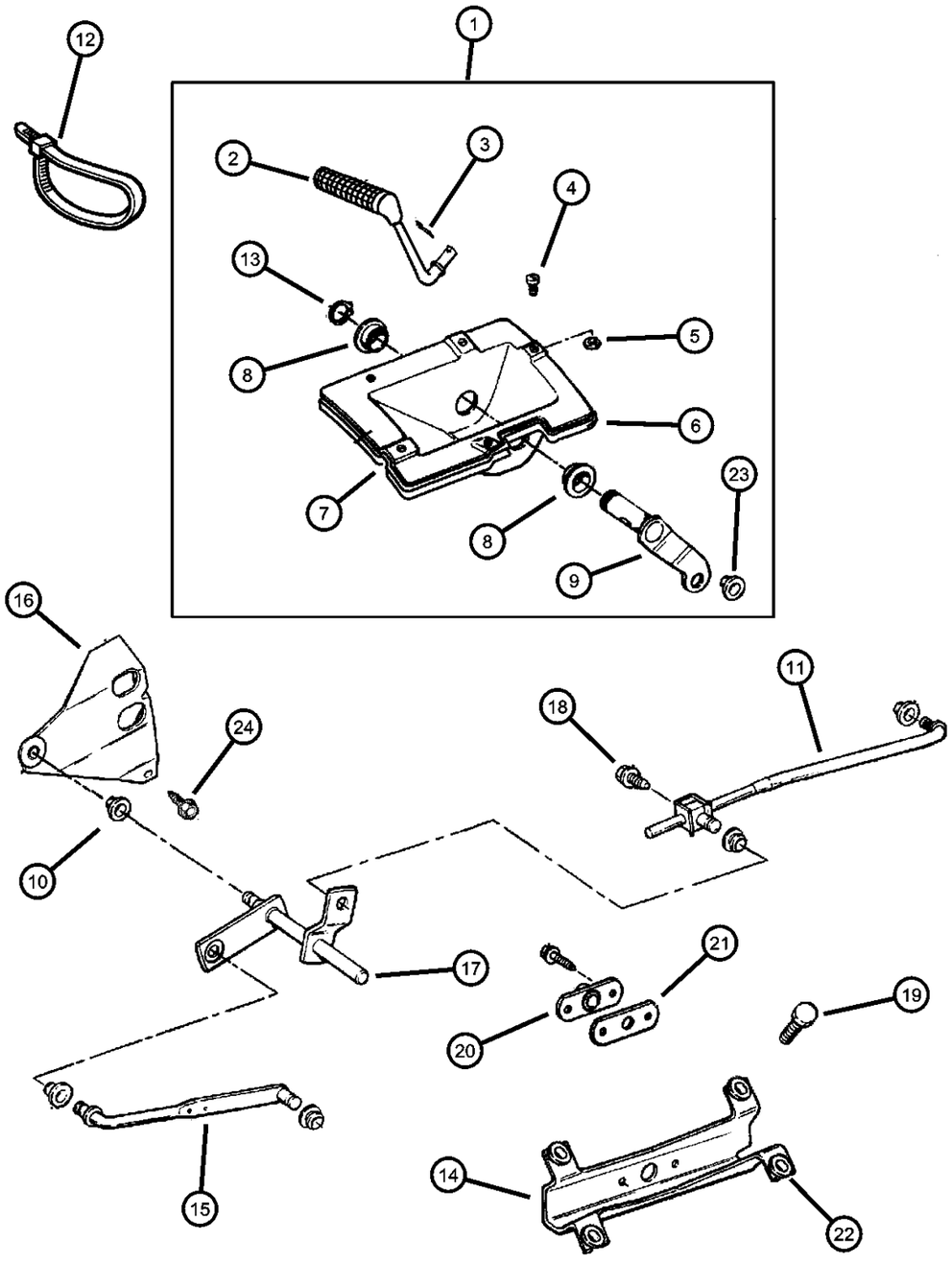

ITEM	PART NUMBER	QTY	LINE	SERIES	BODY	ENGINE	TRANS	TRIM	DESCRIPTION
	53004810	1	J			ENC	DBB		
		1	J, U			EP0			
		1	J, U			ER0	DDQ		
		1	J, U			ER0	DG0		
11									ROD, Gear Shift Control, Transfer Case
	52104073	1	J			ENC	DBB		
		1	J, U			EP0			
		1	J, U			ER0	DG0		
12									STRAP, Retaining
	J3693058	1	J						
		1	U						
13									SNAP RING
	11505389	1	J						
		1	U						
14									BRACKET, Torque Shaft
	52104017	1	J, U			EP0			
		1	J, U			ER0	DG0		
	52104018	1	J, U			ENC, ER0	DDQ		
15									ROD, Gear Shift Control, Transfer Case
	53004941	1	J, U			EP0			
	53004942	1	J, U			ER0	DG0		
	53004945	1	J			EN0			
	53005448	1	J, U			ER0	DDQ		
16									BRACKET, Torque Shaft
	52077574	1	J, U			ER0	DDQ		
	52078605	1	J, U			ENC	DBB		
	53005069	1	J, U			EP0			
	53005071	1	J, U			ER0	DG0		
17									TORQUE SHAFT, Transfer Case
	52078541	1	J, U			ENC	DBB		
	53005151	1	J, U			EP0			
	53005552	1	J, U			ER0	DDQ		

CHEROKEE (XJ)

SERIES	LINE	BODY	ENGINE	TRANSMISSION
L = LOWLINE	T = JEEP - 2WD B = JEEP - 2WD (RHD) J = JEEP - 4WD U = JEEP - 4WD (RHD)	72 = SPORT UTILITY 2-DR 74 = SPORT UTILITY 4-DR	ENC = 2.5L 4 Cyl Turbo Diesel Engine EPB = 2.5L 4 Cylinder Engine EPE = Engine - 2.5L Power Tech I-4 Cyl. ERH = 4.0L Power Tech I-6 Engine	DDQ = 5-Speed Manual Transmission DGS = 4-Speed Automatic AW4 Transmission DGO = ALL AUTOMATIC TRANSMISSIONS DBB = ALL MANUAL TRANSMISSIONS

Gearshift Controls Command Trac (DHN)
Figure 231-1220

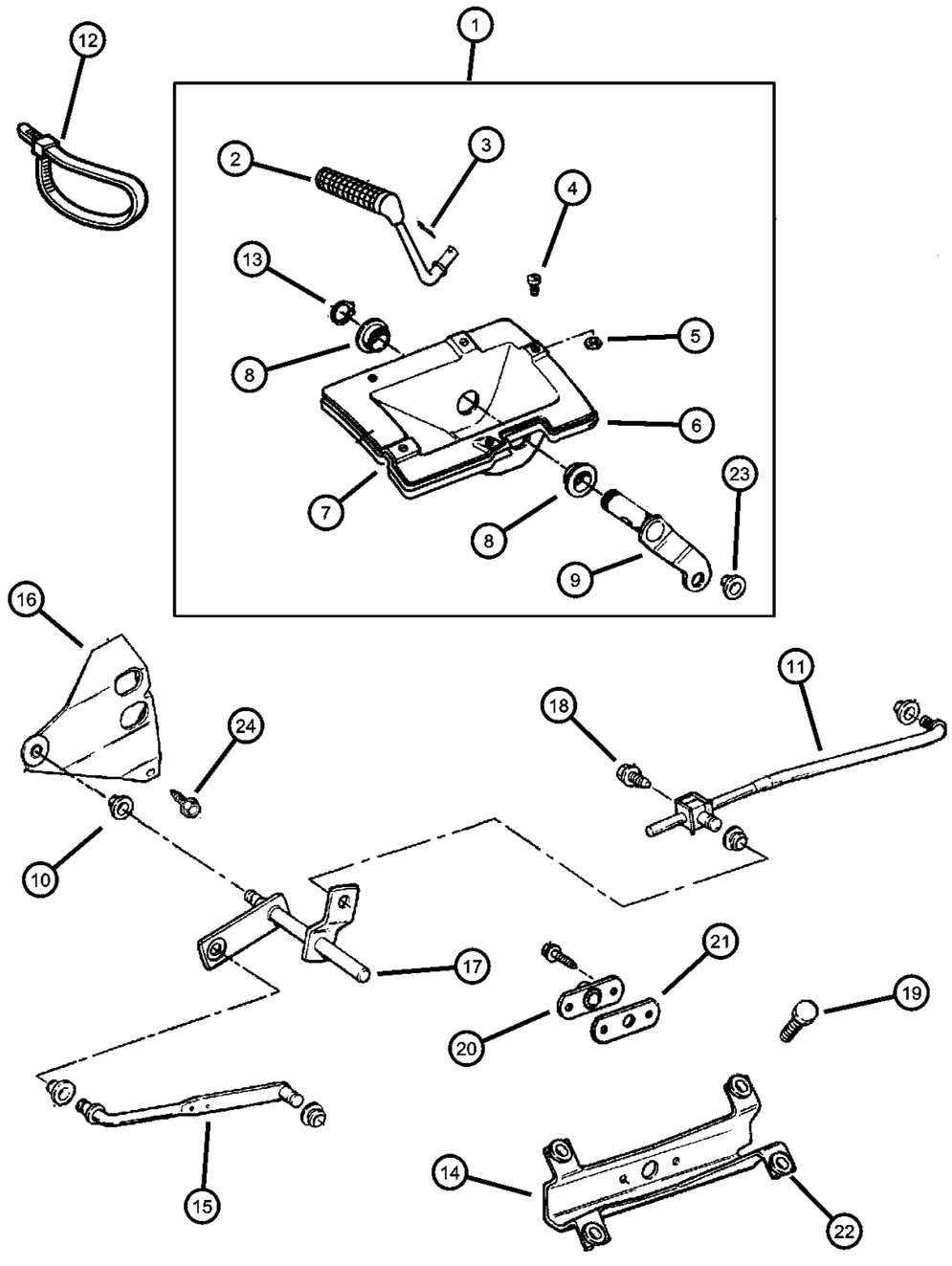

ITEM	PART NUMBER	QTY	LINE	SERIES	BODY	ENGINE	TRANS	TRIM	DESCRIPTION
18	J4006036	1	J, U						BOLT, Hex Head, .312-18x.50
19	06503811	4	J, U						BOLT, Hex Head, M6x1.00x20.00
20									BEARING, Transfer Case Shift
	52078134	1	J, U			ER0	DG0		
		1	J, U			ENC, ER0	DDQ		
21	53005154	1	J, U			ENC, ER0	DDQ		GASKET, Gearshift Control Rod
22									GROMMET
	52104014	4	J			EP0			
		4	J			ER0	DG0		
		4	J			ENC, ER0	DDQ		
23									GROMMET, Control Rod Front
	03575333	AR	U						
		AR	J						
24	11504336	1	J, U			ER0	DG0		BOLT, Hex Head, M8x1.25x16

CHEROKEE (XJ)

SERIES	LINE	BODY	ENGINE	TRANSMISSION
L = LOWLINE	T = JEEP - 2WD B = JEEP - 2WD (RHD) J = JEEP - 4WD U = JEEP - 4WD (RHD)	72 = SPORT UTILITY 2-DR 74 = SPORT UTILITY 4-DR	ENC = 2.5L 4 Cyl Turbo Diesel Engine EPB = 2.5L 4 Cylinder Engine EPE = Engine - 2.5L Power Tech I-4 Cyl. ERH = 4.0L Power Tech I-6 Engine	DDQ = 5-Speed Manual Transmission DGS = 4-Speed Automatic AW4 Transmission DGO = ALL AUTOMATIC TRANSMISSIONS DBB = ALL MANUAL TRANSMISSIONS

AR = use ase required - = Non illustrrated part

<< RETURN TO GROUP INDEX

Group - 242

Transfer Case Model 242 [DHC, DHP]

242-100 Transfer Case Assembly 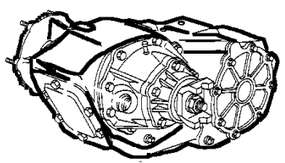	**242-1200** Gearshift Controls 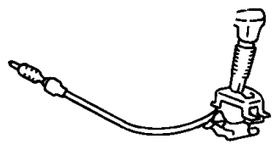	**242-200** Case and Related Parts 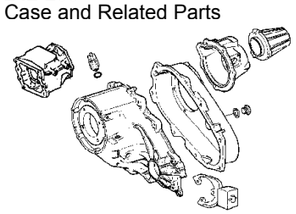	**242-400** Gear Train 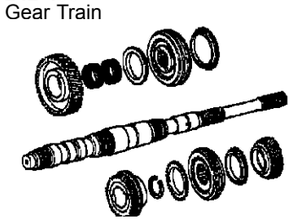
242-900 Fork and Rails 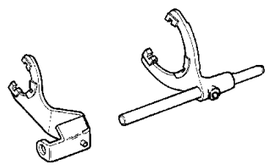			

Group - 242 Transfer Case Model 242 [DHC, DHP]

Illustration Title — Group-Fig. No.

Transfer Case Assembly
Transfer Case Select Trac (DHP) ..... Fig. 242 - 110

Case and Related Parts
Case and Related Parts Select Trac (DHP) ..... Fig. 242 - 210

Gear Train
Gear Train Select Trac (DHP) ..... Fig. 242 - 410

Fork and Rails
Fork and Rails Select Trac (DHP) ..... Fig. 242 - 910

Gearshift Controls
Gearshift Controls Select Trac (DHP) ..... Fig. 242 - 1210

Transfer Case Select Trac (DHP)
Figure 242-110

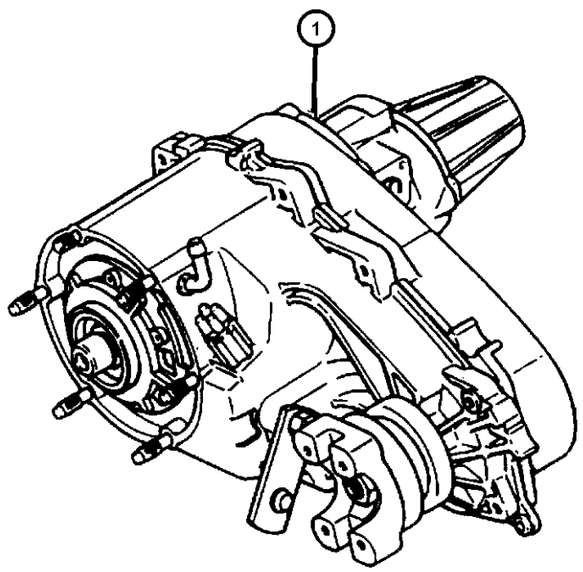

ITEM	PART NUMBER	QTY	LINE	SERIES	BODY	ENGINE	TRANS	TRIM	DESCRIPTION
Notes:									
ER0 = All 4.0L 6 Cylinder Gas Engine									
DG0 = All Automatic Transmissions									
1									TRANSFER CASE, NP242
	52098899	1	J, U			ER0	DG0		w/o Export Package (ABE), w/o Police Package (AHB)
	52111083	1	J, U			ER0	DG0		w/ Export Package (ABE), w/ Police Package (AHB).

CHEROKEE (XJ)

SERIES	LINE	BODY	ENGINE	TRANSMISSION
L = LOWLINE	T = JEEP - 2WD B = JEEP - 2WD (RHD) J = JEEP - 4WD U = JEEP - 4WD (RHD)	72 = SPORT UTILITY 2-DR 74 = SPORT UTILITY 4-DR	ENC = 2.5L 4 Cyl Turbo Diesel Engine EPB = 2.5L 4 Cylinder Engine EPE = Engine - 2.5L Power Tech I-4 Cyl. ERH = 4.0L Power Tech I-6 Engine	DDQ = 5-Speed Manual Transmission DGS = 4-Speed Automatic AW4 Transmission DGO = ALL AUTOMATIC TRANSMISSIONS DBB = ALL MANUAL TRANSMISSIONS

Case and Related Parts Select Trac (DHP)
Figure 242-210

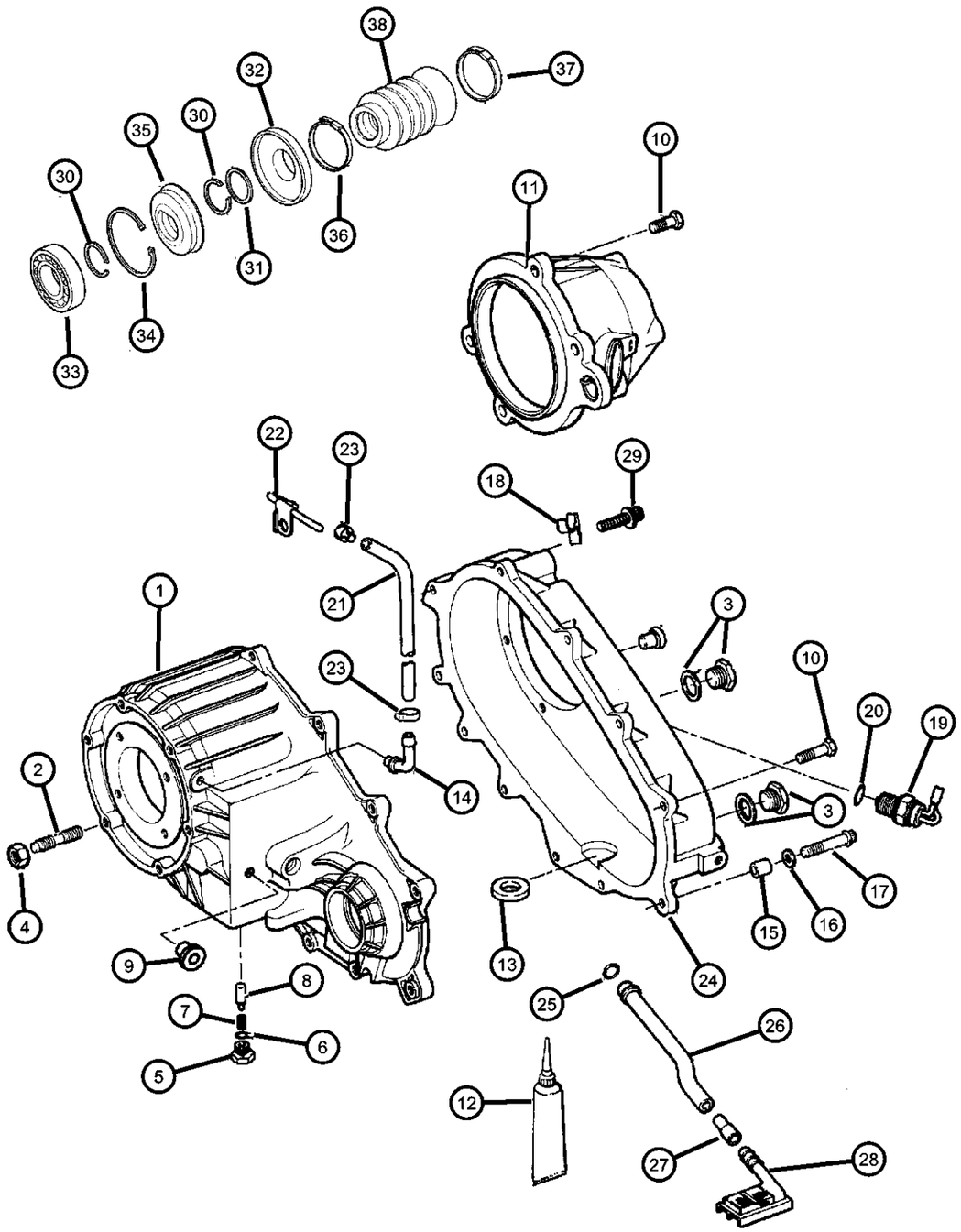

ITEM	PART NUMBER	QTY	LINE	SERIES	BODY	ENGINE	TRANS	TRIM	DESCRIPTION
Notes:									
EP0= All 2.5L, 4 Cylinder, Gas Engine									
ER0= All 4.0L., 6 Cylinder, Gas Engine									
EN0= All 4/5 Cylinder, Turbo Diesel Engine									
DG0 = All Automatic Transmissions									
1									CASE, Transfer Front
	04883336	1	J			ER0	DG0		52111083
		1	J, U			ER0	DG0		52098899
2									STUD, M10x1.54x36
	04505365	6	J			ER0	DG0		52098899
		6	J			ER0	DG0		52111083
3									PLUG, Oil Fill
	04856641	2	J			ER0	DG0		
		2	J			ER0	DG0		52111083
4	J4006681	6	J			EN0, ER0			NUT AND CONED WASHER, Hex, .375-24
5									SCREW
	04886473AA	1	J, U			ER0	DG0		
	53008216	1	J			ER0	DG0		52111083
		1	J, U			ER0	DG0		52098899
6									SEAL, Vacuum Switch
	04167963	1	J			ER0	DG0		52111083
		1	J, U			ER0	DG0		5298899
7									SPRING, Shift Detent
	04638497	1	J			ER0	DG0		52111083
		1	J, U			ER0	DG0		52098899
8									PLUNGER
	53008217	1	J			ER0	DG0		52098899
		1	J			ER0	DG0		52111083
9									PLUG
	00015105	1	J, U			ER0	DG0		52098899
		1	J, U			ER0	DG0		52111083
10									BOLT, Transfer Case
	04210617	8	J			ER0	DG0		52098899
		12	J			ER0	DG0		52111083

CHEROKEE (XJ)

SERIES	LINE	BODY	ENGINE	TRANSMISSION
L = LOWLINE	T = JEEP - 2WD B = JEEP - 2WD (RHD) J = JEEP - 4WD U = JEEP - 4WD (RHD)	72 = SPORT UTILITY 2-DR 74 = SPORT UTILITY 4-DR	ENC = 2.5L 4 Cyl Turbo Diesel Engine EPB = 2.5L 4 Cylinder Engine EPE = Engine - 2.5L Power Tech I-4 Cyl. ERH = 4.0L Power Tech I-6 Engine	DDQ = 5-Speed Manual Transmission DGS = 4-Speed Automatic AW4 Transmission DGO = ALL AUTOMATIC TRANSMISSIONS DBB = ALL MANUAL TRANSMISSIONS

Case and Related Parts Select Trac (DHP)
Figure 242-210

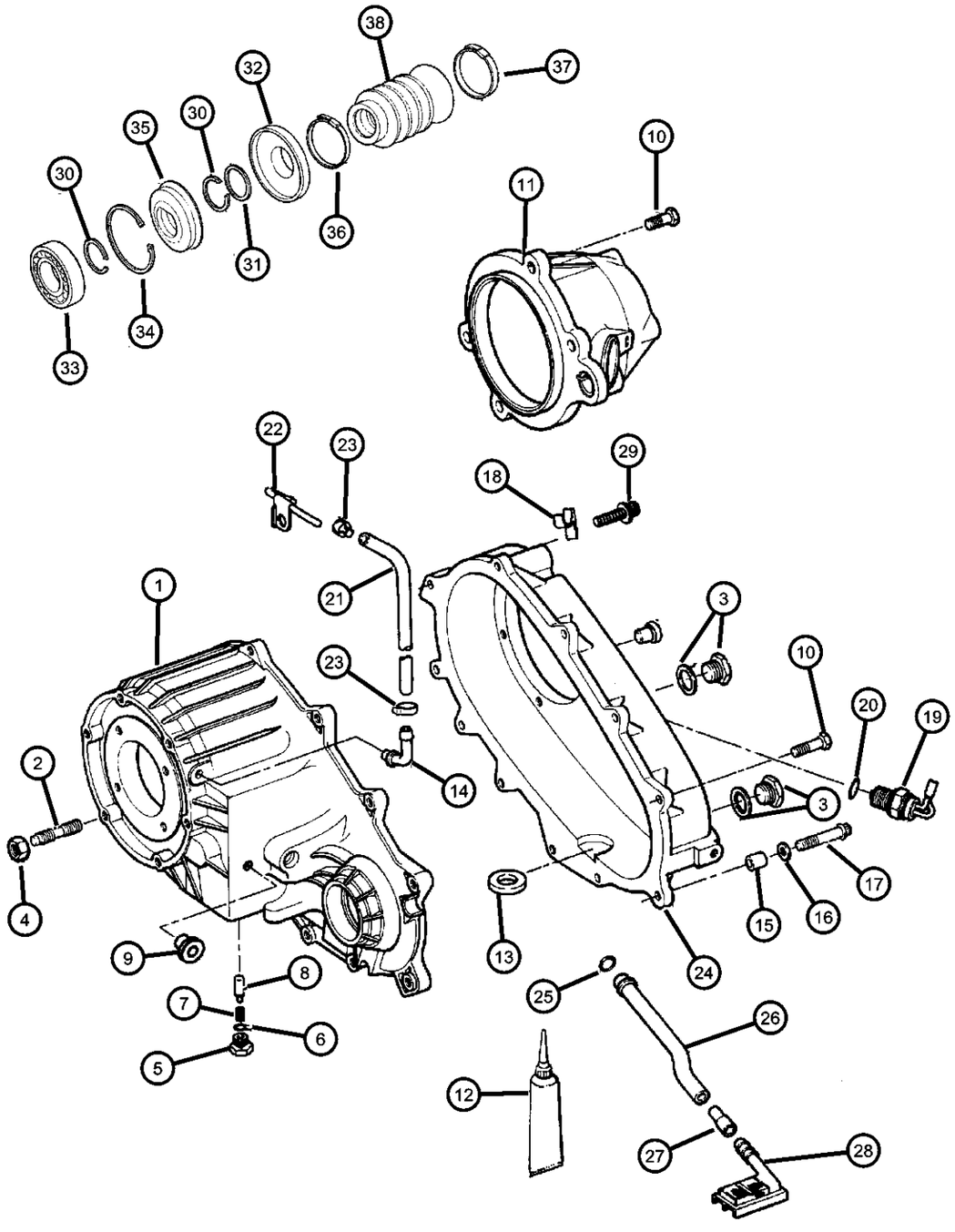

ITEM	PART NUMBER	QTY	LINE	SERIES	BODY	ENGINE	TRANS	TRIM	DESCRIPTION
11									RETAINER, Transfer Case Rear
	04856391	1	J			ER0	DG0		52111083
		1	J, U			ER0	DG0		52098899
12	04318025	1	J, U			ER0	DGS		SEALANT, RTV
13	03681601	1	J			ER0	DG0		MAGNET, Transmission, 52098899
14									VENT, Transfer Case
	04796910	1	J			ER0	DG0		52111083
		1	J, U			ER0	DG0		52098899
15									DOWEL, Transfer Case
	04116310	2	J			ER0	DG0		52111083
		1	J, U			ER0	DG0		52098899
16									WASHER, Flat
	04210983	2	J			ER0	DG0		52111083
		1	J, U			ER0	DG0		52098899
17									BOLT, Hex Flange Head
	04210614	2	J			ER0	DG0		52111083
		1	J, U			ER0	DG0		52098899
18	52118181	1	J, U			EN0, ER0	DBB		CLIP
19	56006755	1	J			ER0	DG0		SWITCH, Transfer Case Mode
20	04338956	1	J, U			ER0	DG0		SEAL, Vacuum Switch, 52098899
21	04443176	1							HOSE, Fuel, .31 I.D. 50 Foot Roll
22	53007494	1	J, U						VENT, Transfer Case
23	06502081	2	J, U						CLAMP, Oil Cooler Line
24									CASE, Transfer Case Rear
	04874298	1	J			ER0	DG0		52111083
		1	J, U			ER0	DG0		52098899
25									SEAL, Oil
	04338942	1	J			ER0	DG0		52111083
		1	J, U			ER0	DG0		52098899
26									TUBE, Oil Pickup
	83503523	1	J			ER0	DG0		52111083
		1	J, U			ER0	DG0		52098899
27									CONNECTOR, Oil Tube Pickup

CHEROKEE (XJ)

SERIES	LINE	BODY	ENGINE	TRANSMISSION
L = LOWLINE	T = JEEP - 2WD B = JEEP - 2WD (RHD) J = JEEP - 4WD U = JEEP - 4WD (RHD)	72 = SPORT UTILITY 2-DR 74 = SPORT UTILITY 4-DR	ENC = 2.5L 4 Cyl Turbo Diesel Engine EPB = 2.5L 4 Cylinder Engine EPE = Engine - 2.5L Power Tech I-4 Cyl. ERH = 4.0L Power Tech I-6 Engine	DDQ = 5-Speed Manual Transmission DGS = 4-Speed Automatic AW4 Transmission DGO = ALL AUTOMATIC TRANSMISSIONS DBB = ALL MANUAL TRANSMISSIONS

Case and Related Parts Select Trac (DHP)
Figure 242-210

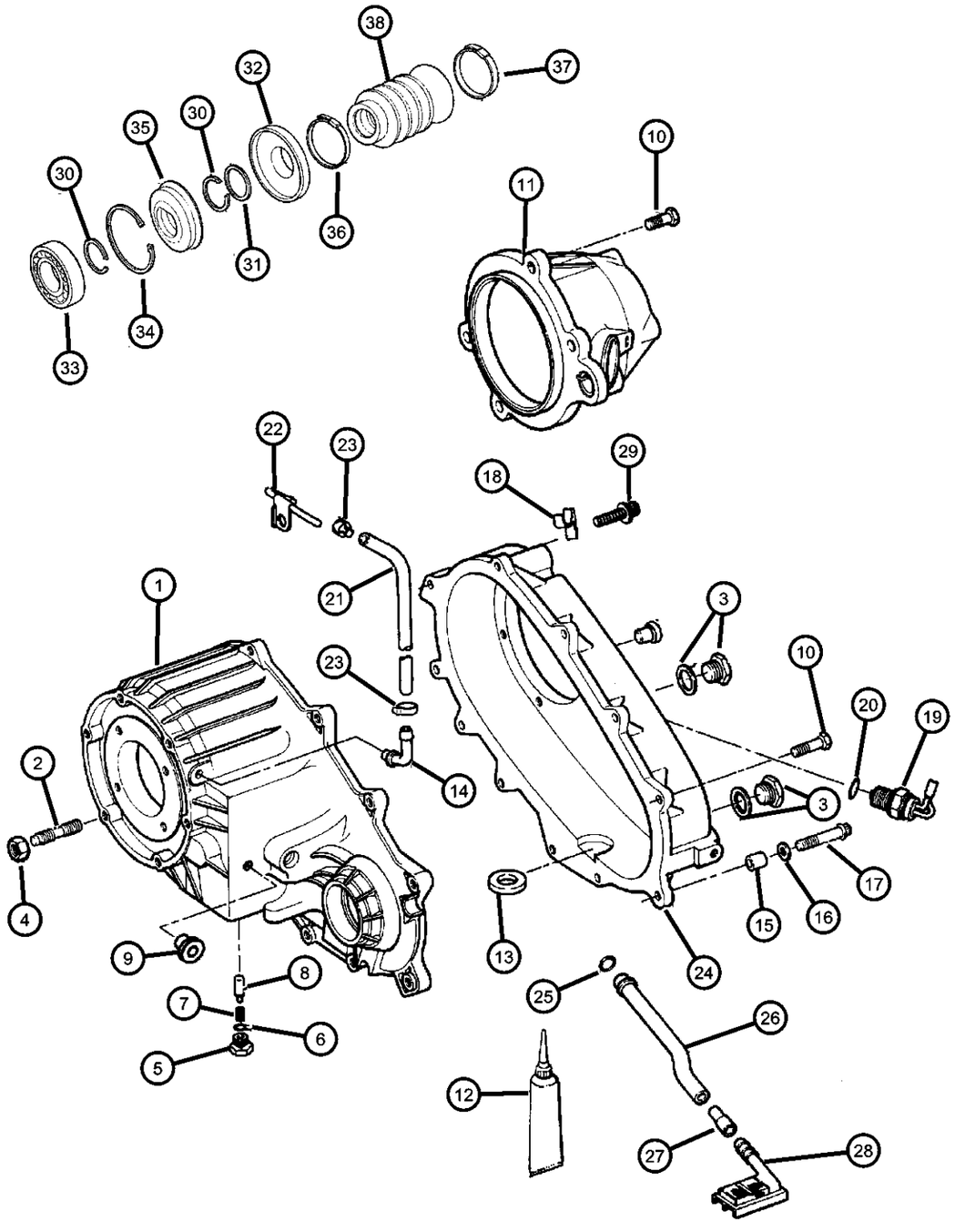

ITEM	PART NUMBER	QTY	LINE	SERIES	BODY	ENGINE	TRANS	TRIM	DESCRIPTION
	04338944	1	J			ER0	DG0		52111083
		1	J, U			ER0	DG0		52098899
28									FILTER, Transfer Case Oil
	04338943	1	J			ER0	DG0		52111083
		1	J, U			ER0	DG0		52098899
29									BOLT, Twelve Point Head, M10x1.5x48
	J8130979	1	J			ER0	DG0		52111083
		1	J, U			ER0	DG0		52098899
30									SNAP RING
	J8134488	1	J			ER0	DG0		52098899
		2	J			ER0	DG0		52111083
		1	J, U			ER0	DG0		52098899
31									WASHER
	04798118	1	J			ER0	DG0		52111083
		1	J, U			ER0	DG0		52098899
32									SLINGER, Oil
	04798119	1	J			ER0	DG0		52111083
		1	J, U			ER0	DG0		52098899
33									BEARING
	04338892	1	J			ER0	DG0		52111083
		1	J, U			ER0	DG0		52098899
34									SNAP RING
	04798116	1	J			ER0	DG0		52111083
		1	J, U			ER0	DG0		52098899
35									SEAL, Output Shaft
	04798117	1	J			ER0	DG0		52111083
		1	J, U			ER0	DG0		52098899
36									CLAMP, Boot
	04798121	1	J			ER0	DG0		52111083
		1	J, U			ER0	DG0		52098899
37									CLAMP, Boot
	04798122	1	J			ER0	DG0		52111083

CHEROKEE (XJ)

SERIES	LINE	BODY	ENGINE	TRANSMISSION
L = LOWLINE	T = JEEP - 2WD B = JEEP - 2WD (RHD) J = JEEP - 4WD U = JEEP - 4WD (RHD)	72 = SPORT UTILITY 2-DR 74 = SPORT UTILITY 4-DR	ENC = 2.5L 4 Cyl Turbo Diesel Engine EPB = 2.5L 4 Cylinder Engine EPE = Engine - 2.5L Power Tech I-4 Cyl. ERH = 4.0L Power Tech I-6 Engine	DDQ = 5-Speed Manual Transmission DGS = 4-Speed Automatic AW4 Transmission DGO = ALL AUTOMATIC TRANSMISSIONS DBB = ALL MANUAL TRANSMISSIONS

Case and Related Parts Select Trac (DHP)
Figure 242-210

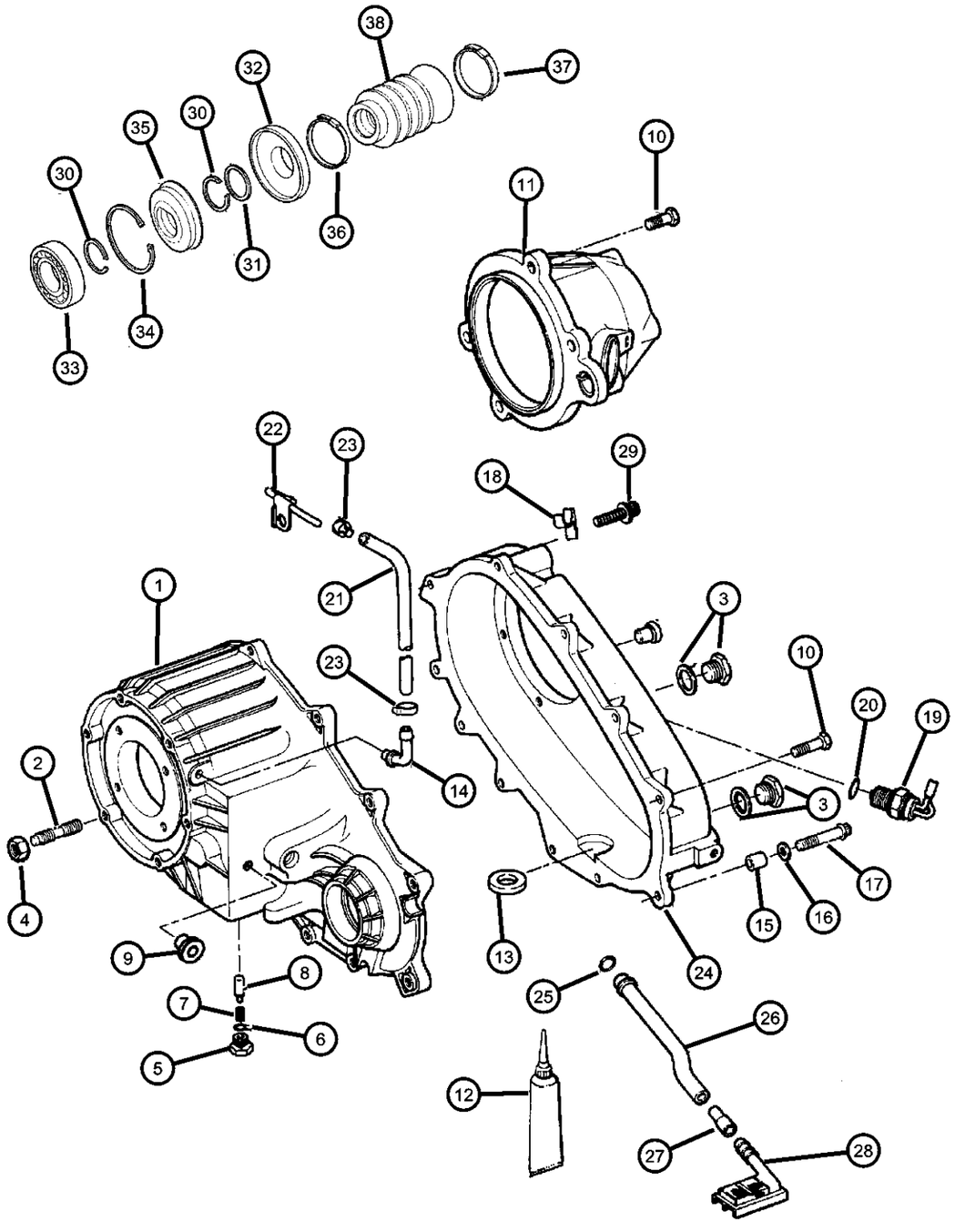

ITEM	PART NUMBER	QTY	LINE	SERIES	BODY	ENGINE	TRANS	TRIM	DESCRIPTION
		1	J, U			ER0	DG0		52098899
38									BOOT, Driveshaft
	04798123	1	J			ER0	DG0		52111083
		1	J, U			ER0	DG0		52098899

CHEROKEE (XJ)

SERIES	LINE	BODY	ENGINE	TRANSMISSION
L = LOWLINE	T = JEEP - 2WD B = JEEP - 2WD (RHD) J = JEEP - 4WD U = JEEP - 4WD (RHD)	72 = SPORT UTILITY 2-DR 74 = SPORT UTILITY 4-DR	ENC = 2.5L 4 Cyl Turbo Diesel Engine EPB = 2.5L 4 Cylinder Engine EPE = Engine - 2.5L Power Tech I-4 Cyl. ERH = 4.0L Power Tech I-6 Engine	DDQ = 5-Speed Manual Transmission DGS = 4-Speed Automatic AW4 Transmission DGO = ALL AUTOMATIC TRANSMISSIONS DBB = ALL MANUAL TRANSMISSIONS

Gear Train Select Trac (DHP)
Figure 242-410

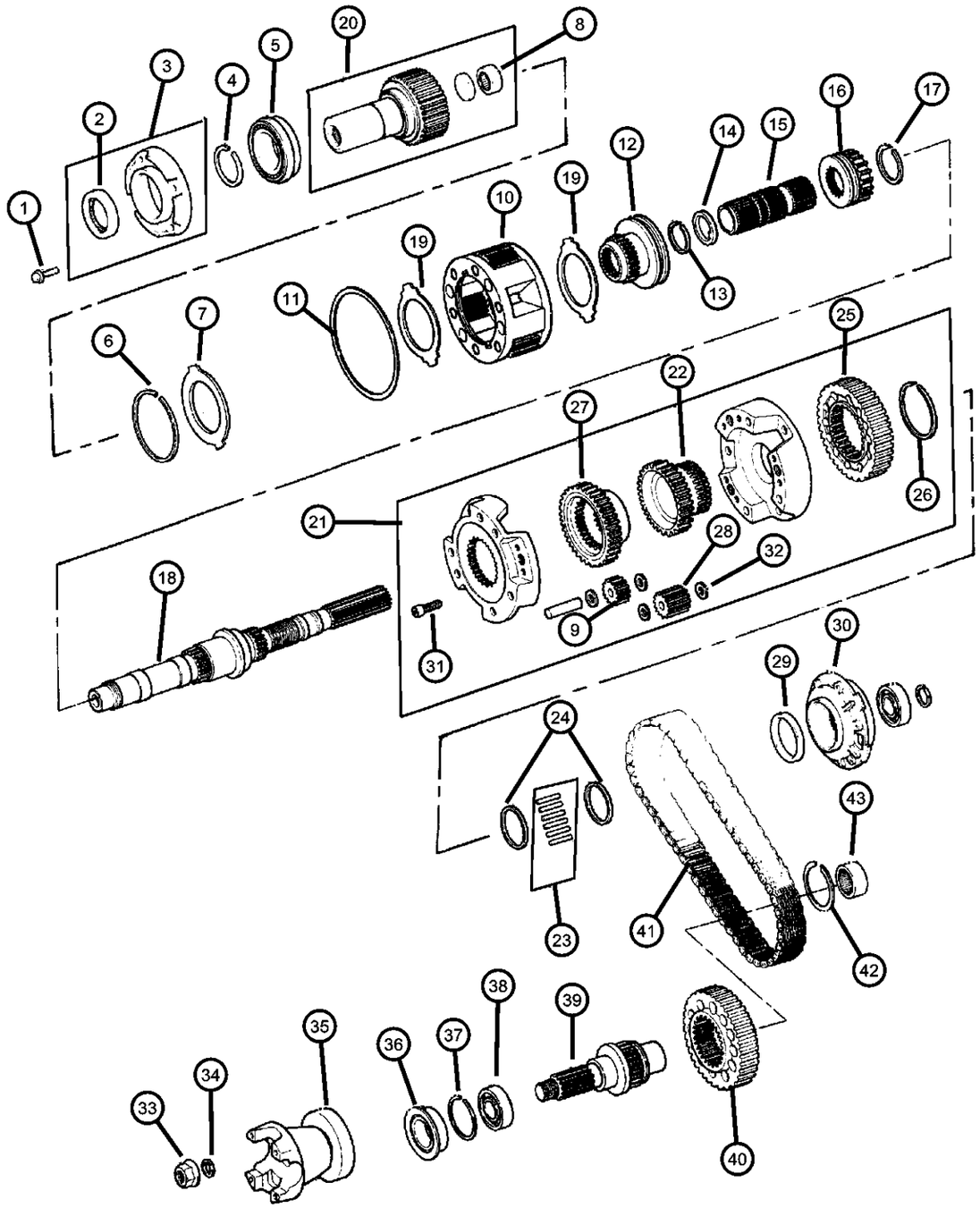

ITEM	PART NUMBER	QTY	LINE	SERIES	BODY	ENGINE	TRANS	TRIM	DESCRIPTION
Notes:									
ER0= All 4.0L., 6 Cylinder, Gas Engine									
DG0 = All Automatic Transmissions									
1									BOLT
	06500318	4	J			ER0	DG0		52098899
		4	J			ER0	DG0		52111083
		4	J, U			ER0	DG0		52111083
		4	J, U			ER0	DG0		52098899
2									SEAL, Input Gear
	04167929	1	J			ER0	DG0		52111083
		1	J, U			ER0	DG0		52098899
3									RETAINER
	04338973	1	J			ER0	DG0		52111083
		1	J, U			ER0	DG0		52098899
4									SNAP RING
	03821558	1	J			ER0	DG0		52111083
		1	J, U			ER0	DG0		52098899
5									BEARING, Input Gear
	04746155	1	J			ER0	DG0		52111083
		1	J, U			ER0	DG0		52098899
6									SNAP RING
	04338910	1	J			ER0	DG0		52111083
		1	J, U			ER0	DG0		52098899
7									RING
	04338909	1	J			ER0	DG0		52111083
		1	J, U			ER0	DG0		52098899
8									BEARING, Input Shaft
	83503507	1	J			ER0	DG0		52111083
		1	J, U			ER0	DG0		52098899
9									GEAR, Planetary
	83504170	3	J			ER0	DG0		52111083
		1	J, U			ER0	DG0		52098899
10									PLANETARY, Transfer Case
	04796903	1	J			ER0	DG0		52111083

CHEROKEE (XJ)

SERIES	LINE	BODY	ENGINE	TRANSMISSION
L = LOWLINE	T = JEEP - 2WD B = JEEP - 2WD (RHD) J = JEEP - 4WD U = JEEP - 4WD (RHD)	72 = SPORT UTILITY 2-DR 74 = SPORT UTILITY 4-DR	ENC = 2.5L 4 Cyl Turbo Diesel Engine EPB = 2.5L 4 Cylinder Engine EPE = Engine - 2.5L Power Tech I-4 Cyl. ERH = 4.0L Power Tech I-6 Engine	DDQ = 5-Speed Manual Transmission DGS = 4-Speed Automatic AW4 Transmission DGO = ALL AUTOMATIC TRANSMISSIONS DBB = ALL MANUAL TRANSMISSIONS

Gear Train Select Trac (DHP)
Figure 242-410

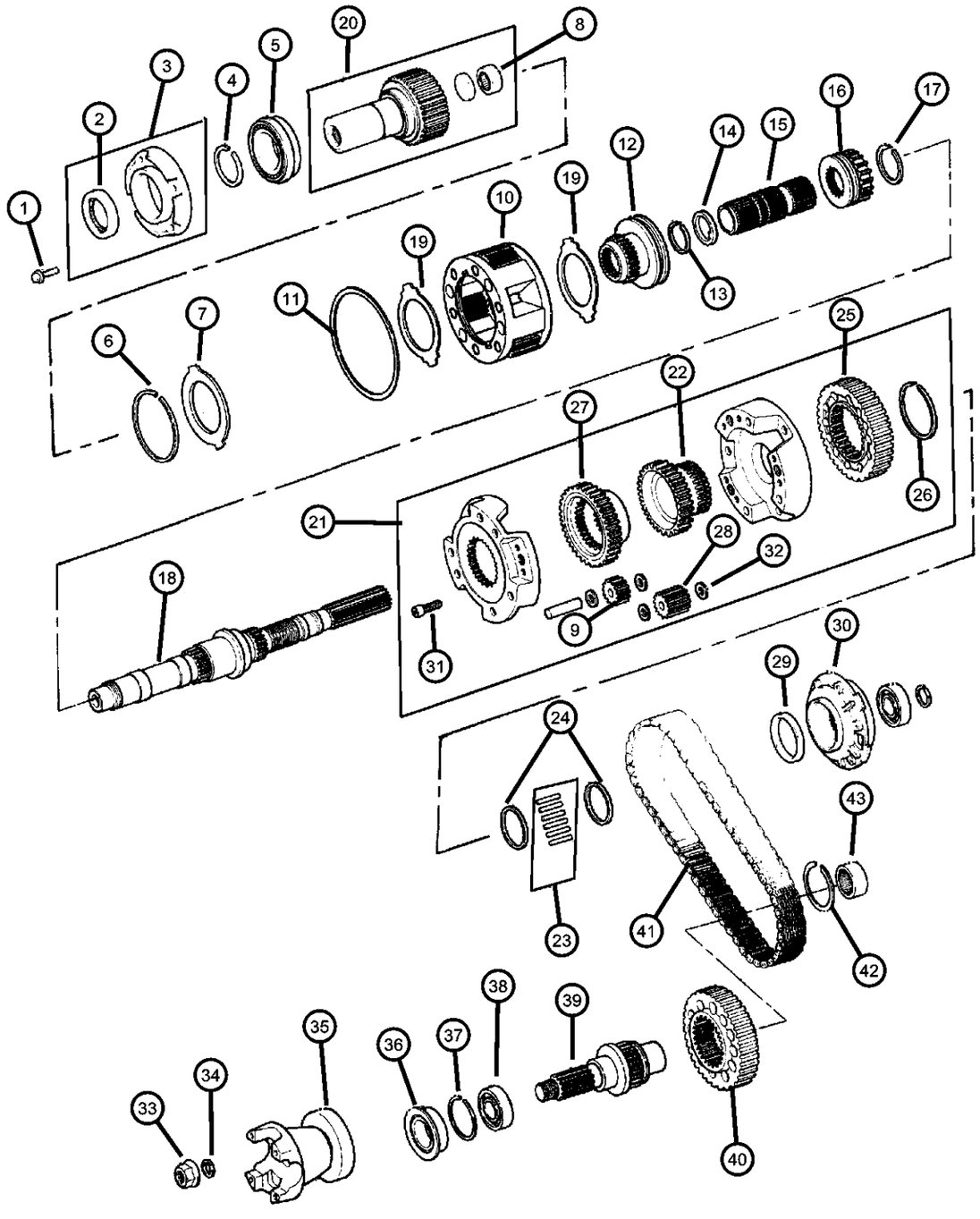

ITEM	PART NUMBER	QTY	LINE	SERIES	BODY	ENGINE	TRANS	TRIM	DESCRIPTION
		1	J, U			ER0	DG0		52098899
11									SNAP RING, Annulus Gear
	04219065	1	J			ER0	DG0		52111083
		1	J, U			ER0	DG0		52098899
12									SLEEVE, Shift Range
	04798279	1	J			ER0	DG0		52111083
		1	J, U			ER0	DG0		52098899
13									SNAP RING
	83503540	1	J			ER0	DG0		52111083
		1	J, U			ER0	DG0		52098899
14									WASHER, Intermediate Sleeve
	83503539	1	J			ER0	DG0		52111083
		1	J, U			ER0	DG0		52098899
15									SHAFT, Intermediate
	04798277	1	J			ER0	DG0		52111083
		1	J, U			ER0	DG0		52098899
16									SLEEVE, Mode Synchronizer
	83503542	1	J			ER0	DG0		52111083
		1	J, U			ER0	DG0		52098899
17									SNAP RING
	83503537	1	J			ER0	DG0		52111083
		1	J, U			ER0	DG0		52098899
18									MAINSHAFT, Transfer Case
	04798145	1	J			ER0	DG0		52111083
		1	J, U			ER0	DG0		52098899
19									THRUST WASHER, Planetary Carrier
	04338908	2	J			ER0	DG0		52111083
		1	J, U			ER0	DG0		52098899
20									GEAR, Input
	04798126	1	J			ER0	DG0		52111083
		1	J, U			ER0	DG0		52098899
21									DIFFERENTIAL, Transfer Case

CHEROKEE (XJ)

SERIES	LINE	BODY	ENGINE	TRANSMISSION
L = LOWLINE	T = JEEP - 2WD B = JEEP - 2WD (RHD) J = JEEP - 4WD U = JEEP - 4WD (RHD)	72 = SPORT UTILITY 2-DR 74 = SPORT UTILITY 4-DR	ENC = 2.5L 4 Cyl Turbo Diesel Engine EPB = 2.5L 4 Cylinder Engine EPE = Engine - 2.5L Power Tech I-4 Cyl. ERH = 4.0L Power Tech I-6 Engine	DDQ = 5-Speed Manual Transmission DGS = 4-Speed Automatic AW4 Transmission DGO = ALL AUTOMATIC TRANSMISSIONS DBB = ALL MANUAL TRANSMISSIONS

Gear Train Select Trac (DHP)
Figure 242-410

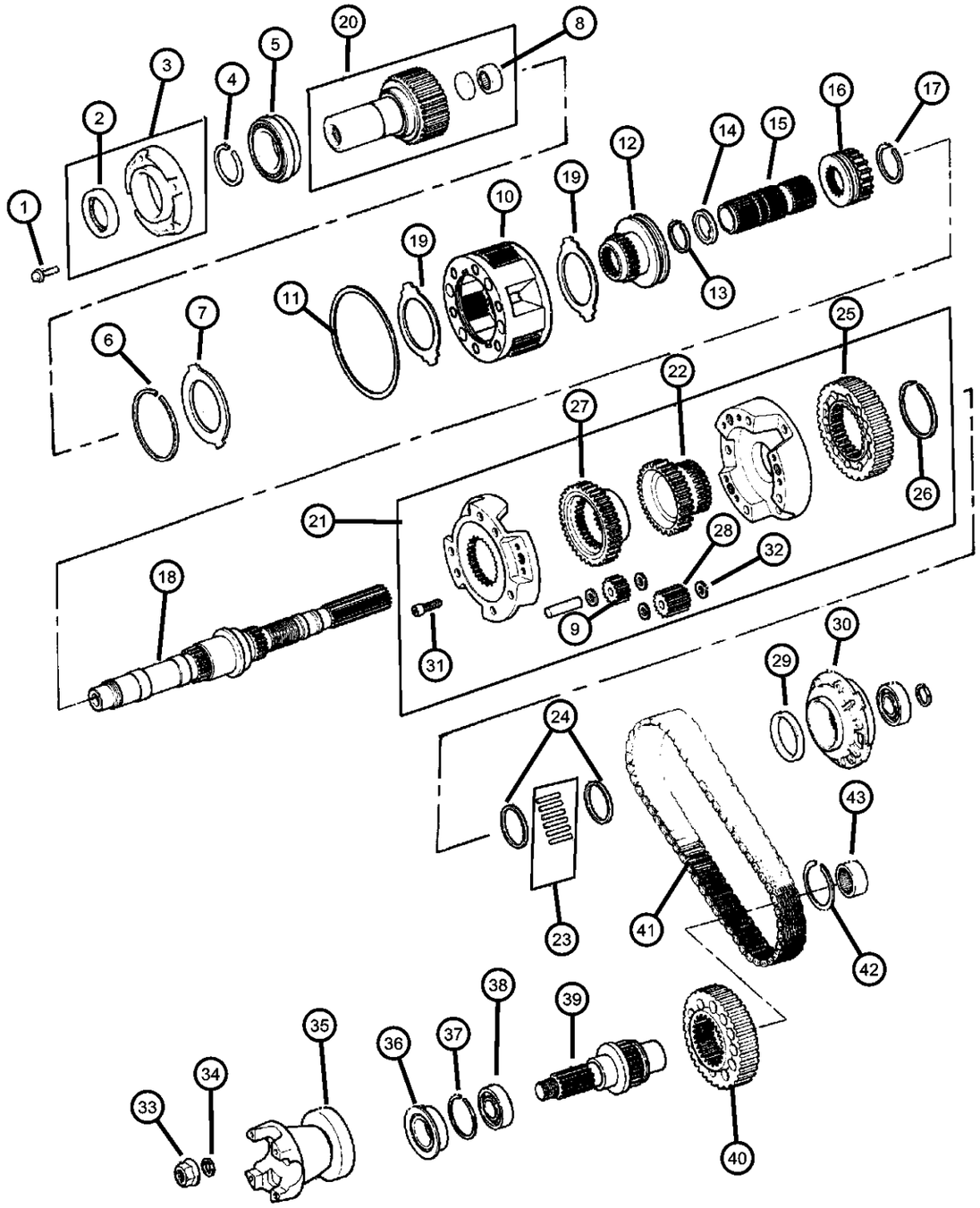

ITEM	PART NUMBER	QTY	LINE	SERIES	BODY	ENGINE	TRANS	TRIM	DESCRIPTION
	83503529	1	J			ER0	DG0		52111083
		1	J, U			ER0	DG0		52098899
22									GEAR, Differential Drive
	83503530	1	J			ER0	DG0		52111083
		1	J, U			ER0	DG0		52098899
23	83503543	1	J, U			ER0	DG0		BEARING PACKAGE, Transfer Case, 52098899
24									SPACER, Sprocket
	83503533	2	J			ER0	DG0		52098899
		1	J			ER0	DG0		52111083
25									SPROCKET, Transfer Case
	83503531	1	J			ER0	DG0		52111083
		1	J, U			ER0	DG0		52098899
26									SNAP RING
	83503532	1	J			ER0	DG0		52098899
		2	J			ER0	DG0		52111083
27									SPROCKET, Differential
	83503536	1	J			ER0	DG0		52098899
		1	J			ER0	DG0		52111083
28									GEAR, Planetary
	83504169	1	J			ER0	DG0		52098899
		3	J			ER0	DG0		52111083
29									SEAL, Main Shaft
	04210603	1	J			ER0	DG0		52098899
		1	J			ER0	DG0		52111083
30									PUMP, Transfer Case Oil
	04338936	1	J			ER0	DG0		52111083
		1	J, U			ER0	DG0		52098999
31									SCREW
	03820898	3	J			ER0	DG0		52098899
		3	J			ER0	DG0		52111083
32									WASHER, Differential Gear
	83504168	12	J			ER0	DG0		52098899

CHEROKEE (XJ)

SERIES	LINE	BODY	ENGINE	TRANSMISSION
L = LOWLINE	T = JEEP - 2WD B = JEEP - 2WD (RHD) J = JEEP - 4WD U = JEEP - 4WD (RHD)	72 = SPORT UTILITY 2-DR 74 = SPORT UTILITY 4-DR	ENC = 2.5L 4 Cyl Turbo Diesel Engine EPB = 2.5L 4 Cylinder Engine EPE = Engine - 2.5L Power Tech I-4 Cyl. ERH = 4.0L Power Tech I-6 Engine	DDQ = 5-Speed Manual Transmission DGS = 4-Speed Automatic AW4 Transmission DGO = ALL AUTOMATIC TRANSMISSIONS DBB = ALL MANUAL TRANSMISSIONS

Gear Train Select Trac (DHP)
Figure 242-410

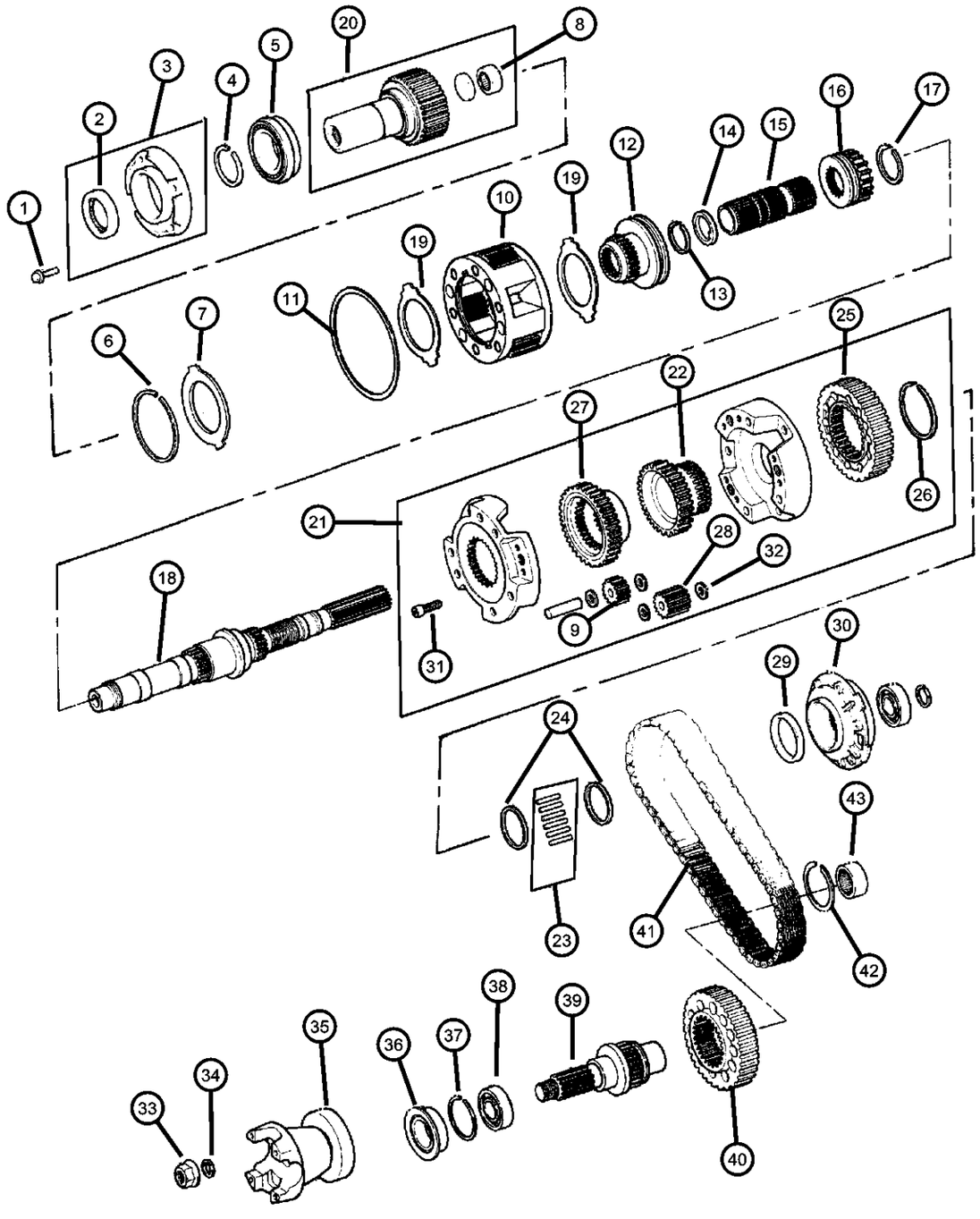

ITEM	PART NUMBER	QTY	LINE	SERIES	BODY	ENGINE	TRANS	TRIM	DESCRIPTION
		12	J			ER0	DG0		52111083
33									NUT, Transfer Case Yoke
	04167924	1	J			ER0	DG0		52098899
		1	J			ER0	DG0		52111083
34									WASHER, Transfer Case Yoke
	04210973	1	J, U			ER0	DG0		52098899
		1	J, U			ER0	DG0		52111083
35									YOKE, Transfer Case
	04798138	1	J			ER0	DG0		52098899
		1	J			ER0	DG0		52111083
36									SEAL, Output Shaft
	04798125	1	J			ER0	DG0		52098899
		1	J			ER0	DG0		52111083
37									SNAP RING
	0089331A	1	J			ER0	DG0		52098899
		1	J			ER0	DG0		52111083
38									BEARING
	04338321	1	J			ER0	DG0		52098899
		1	J			ER0	DG0		52111083
39									OUTPUT SHAFT, Transfer Case
	83503517	1	J			ER0	DG0		52111083
		1	J, U			ER0	DG0		52098999
40									SPROCKET, Transfer Case
	83503518	1	J			ER0	DG0		52111083
		1	J, U			ER0	DG0		52098999
41									CHAIN, Transfer Case
	04638890	1	J, U			ER0	DG0		52111083
	83504575	1	J, U			ER0	DG0		52098999
42									SNAP RING, Bearing
	04167991	1	J			ER0	DG0		
		1	J, U			ER0	DG0		
43									BEARING, Output Shaft

CHEROKEE (XJ)

SERIES	LINE	BODY	ENGINE	TRANSMISSION
L = LOWLINE	T = JEEP - 2WD B = JEEP - 2WD (RHD) J = JEEP - 4WD U = JEEP - 4WD (RHD)	72 = SPORT UTILITY 2-DR 74 = SPORT UTILITY 4-DR	ENC = 2.5L 4 Cyl Turbo Diesel Engine EPB = 2.5L 4 Cylinder Engine EPE = Engine - 2.5L Power Tech I-4 Cyl. ERH = 4.0L Power Tech I-6 Engine	DDQ = 5-Speed Manual Transmission DGS = 4-Speed Automatic AW4 Transmission DGO = ALL AUTOMATIC TRANSMISSIONS DBB = ALL MANUAL TRANSMISSIONS

Gear Train Select Trac (DHP)
Figure 242-410

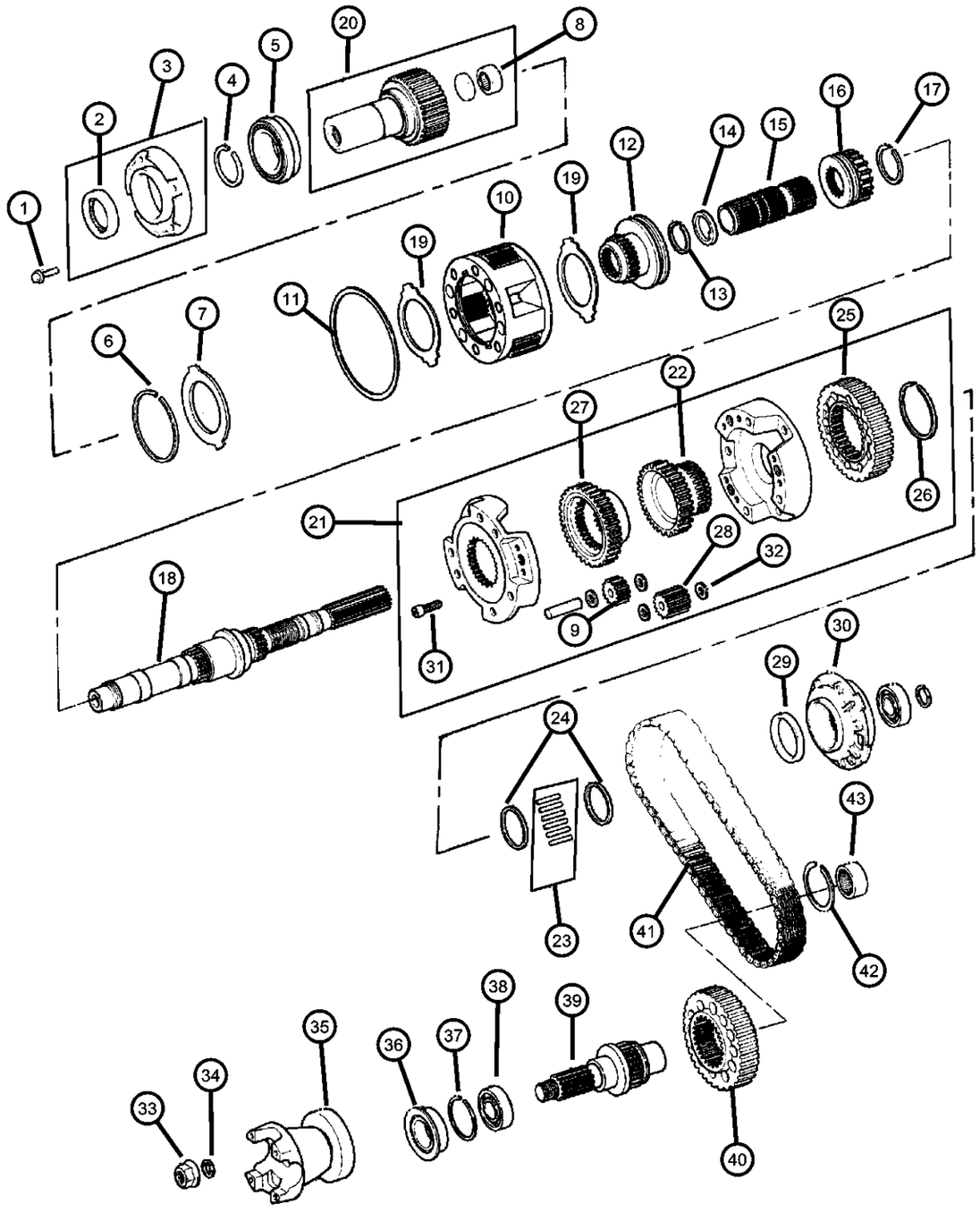

ITEM	PART NUMBER	QTY	LINE	SERIES	BODY	ENGINE	TRANS	TRIM	DESCRIPTION
	04269189	1	J			ER0	DG0		52098899
		1	J			ER0	DG0		52111083

CHEROKEE (XJ)

SERIES	LINE	BODY	ENGINE	TRANSMISSION
L = LOWLINE	T = JEEP - 2WD B = JEEP - 2WD (RHD) J = JEEP - 4WD U = JEEP - 4WD (RHD)	72 = SPORT UTILITY 2-DR 74 = SPORT UTILITY 4-DR	ENC = 2.5L 4 Cyl Turbo Diesel Engine EPB = 2.5L 4 Cylinder Engine EPE = Engine - 2.5L Power Tech I-4 Cyl. ERH = 4.0L Power Tech I-6 Engine	DDQ = 5-Speed Manual Transmission DGS = 4-Speed Automatic AW4 Transmission DGO = ALL AUTOMATIC TRANSMISSIONS DBB = ALL MANUAL TRANSMISSIONS

AR = use ase required - = Non illustrrated part

Fork and Rails Select Trac (DHP)
Figure 242-910

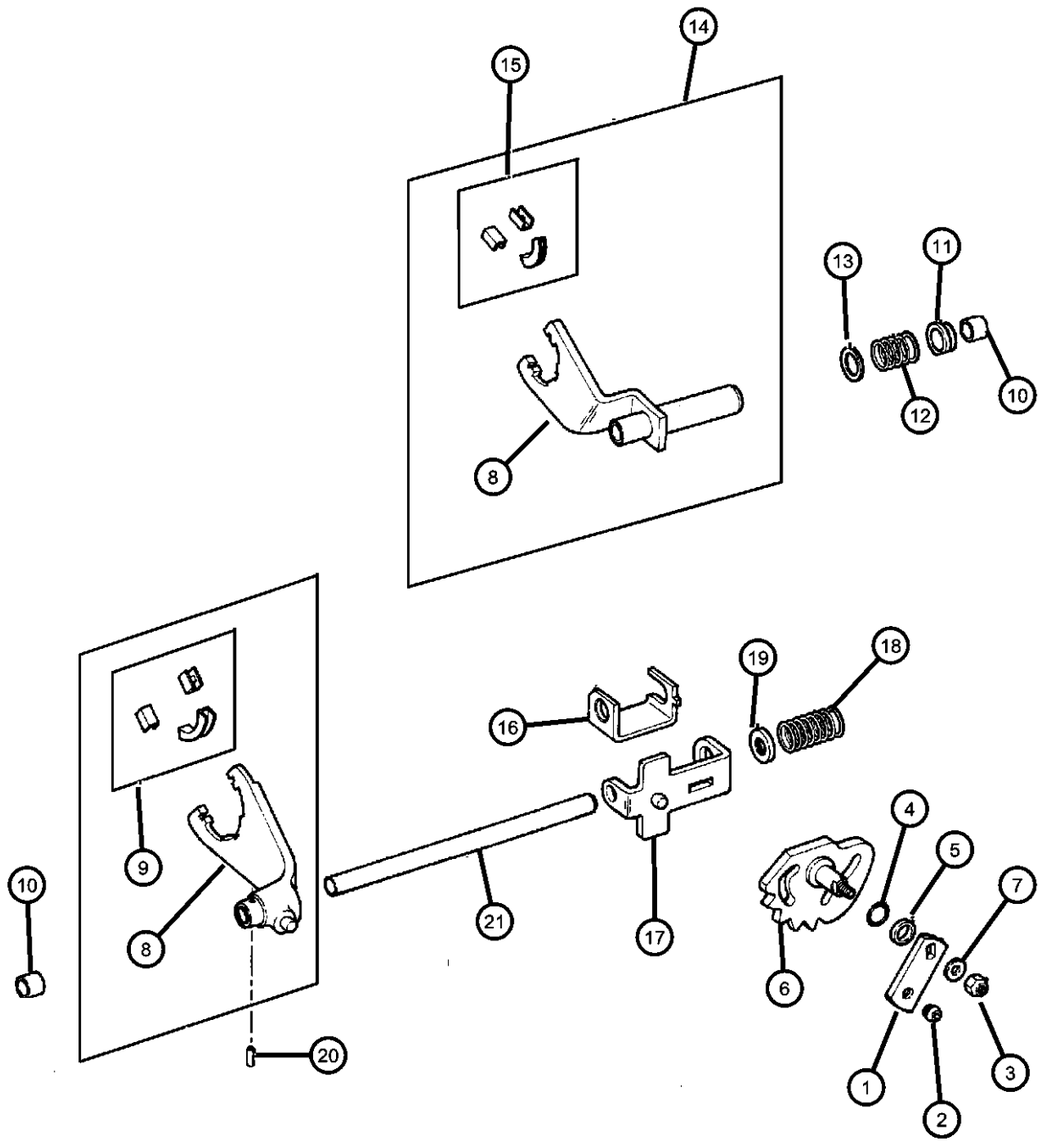

ITEM	PART NUMBER	QTY	LINE	SERIES	BODY	ENGINE	TRANS	TRIM	DESCRIPTION
Notes:									
ER0= All 4.0L., 6 Cylinder, Gas Engine									
EN0= All 4/5 Cylinder, Turbo Diesel Engine									
DDQ = 5 Speed Manual Transmission									
DG0 = All Automatic Transmissions									
1									LEVER, Transfer Case
	53004227	1	J			ER0	DG0		52111083
		1	J, U			ER0	DG0		52098899
2									BUSHING, Shift Lever
	53004810	1	J			ER0	DG0		52098899
		1	J			ER0	DG0		52111083
3									NUT, .375-24
	00152345	1	J			ER0	DG0		52098899
		1	J			ER0	DG0		52111083
4									SEAL, O-Ring
	04167963	1	J			ER0	DG0		52111083
		1	J, U			ER0	DG0		52098899
5									RETAINER, Rear Clutch
	04167964	1	J			ER0	DG0		52111083
		1	J, U			ER0	DG0		52098899
6									SECTOR, Transfer Case
	04638949	1	J			ER0	DG0		52111083
		1	J, U			ER0	DG0		52098899
7		1							WASHER, (NOT SERVICED),
8									FORK, Range
	05003459AA	1	J			ER0	DG0		52111083
		1	J, U			ER0	DG0		52098899
9									PAD, Shift Fork
	04167969	4	J			ER0	DG0		52111083
		2	J, U			ER0	DG0		52098899
	04167970	1	J			ER0	DG0		52098899
		1	J			ER0	DG0		52111083
10									BUSHING, Shift Fork
	J8134291	1	J			ER0	DG0		52111083

CHEROKEE (XJ)

SERIES	LINE	BODY	ENGINE	TRANSMISSION
L = LOWLINE	T = JEEP - 2WD B = JEEP - 2WD (RHD) J = JEEP - 4WD U = JEEP - 4WD (RHD)	72 = SPORT UTILITY 2-DR 74 = SPORT UTILITY 4-DR	ENC = 2.5L 4 Cyl Turbo Diesel Engine EPB = 2.5L 4 Cylinder Engine EPE = Engine - 2.5L Power Tech I-4 Cyl. ERH = 4.0L Power Tech I-6 Engine	DDQ = 5-Speed Manual Transmission DGS = 4-Speed Automatic AW4 Transmission DGO = ALL AUTOMATIC TRANSMISSIONS DBB = ALL MANUAL TRANSMISSIONS

Fork and Rails Select Trac (DHP)
Figure 242-910

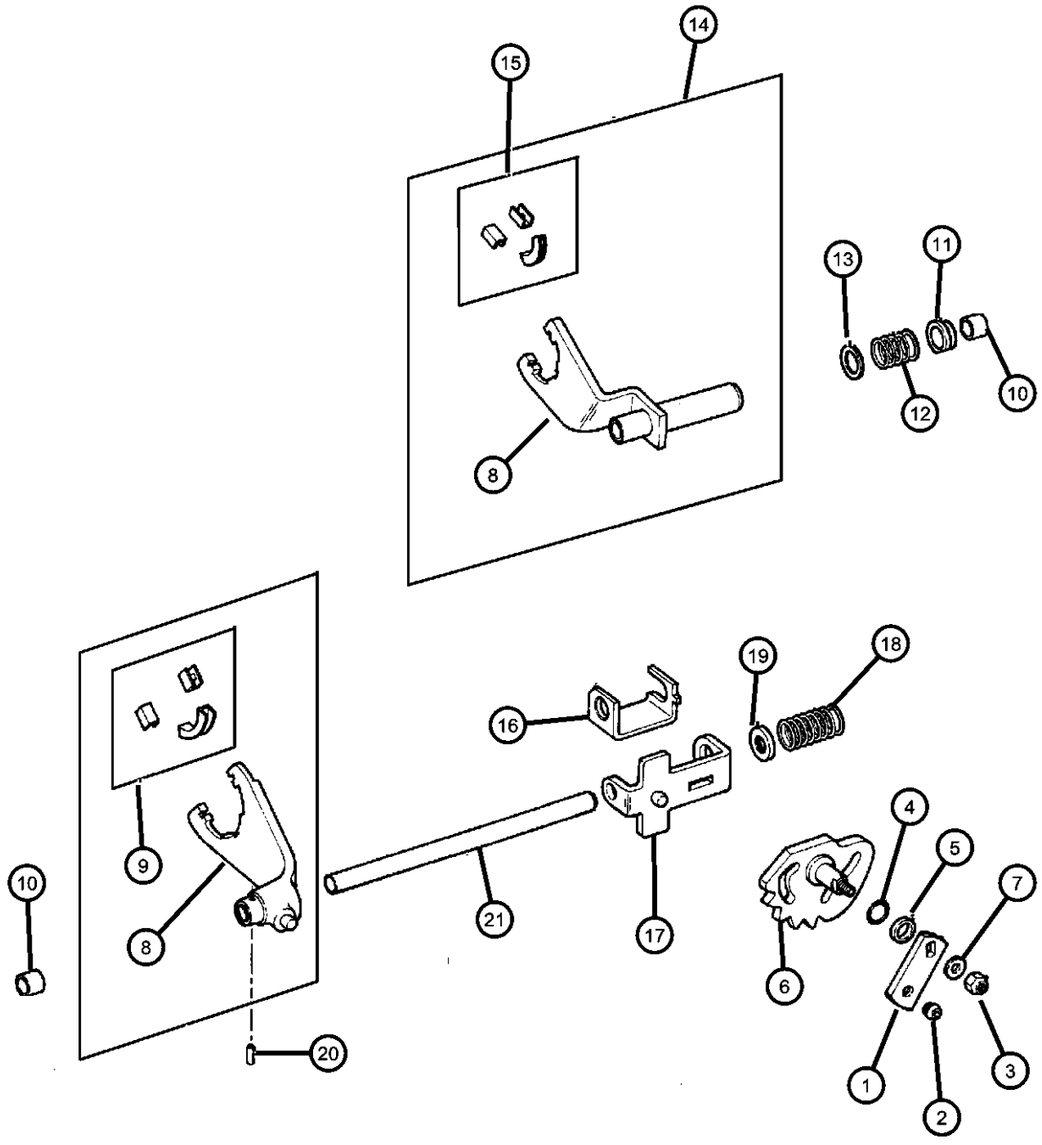

ITEM	PART NUMBER	QTY	LINE	SERIES	BODY	ENGINE	TRANS	TRIM	DESCRIPTION
		1	J, U			ER0	DG0		52098899
11									BUSHING, Shift Rail
	04338945	2	J			ER0	DG0		52111083
		1	J, U			ER0	DG0		52098899
12									SPRING, Mode Shift Fork
	83503513	1	J			ER0	DG0		52111083
		1	J, U			ER0	DG0		52098899
13									WASHER, Flat
	83503512	1	J			ER0	DG0		52111083
		1	J, U			ER0	DG0		52098899
14									FORK, Transfer Case Mode Shift
	04638950	1	J			ER0	DG0		52111083
		1	J, U			ER0	DG0		52098899
15									PAD, Shift Fork
	04167969	4	J			ER0	DG0		52111083
		2	J, U			ER0	DG0		52098899
	04167970	1	J			ER0	DG0		52111083
		1	J, U			ER0	DG0		52098899
16									BRACKET, Shift Mode
	83503510	1	J			ER0	DG0		52111083
		1	J, U			ER0	DG0		52098899
17									BRACKET, Shift Mode
	83503511	1	J			ER0	DG0		52111083
		1	J, U			ER0	DG0		52098899
18									SPRING, Mode Shift Fork
	83503516	1	J			ER0	DG0		52111083
		1	J, U			ER0	DG0		52098899
19									CUP, Shift Fork Spring
	83503515	1	J			ER0	DG0		52111083
		1	J, U			ER0	DG0		52098899
20									PIN, Shift Fork
	01664355	1	J			ER0	DG0		52111083
		1	J, U			ER0	DG0		52098899

CHEROKEE (XJ)

SERIES	LINE	BODY	ENGINE	TRANSMISSION
L = LOWLINE	T = JEEP - 2WD B = JEEP - 2WD (RHD) J = JEEP - 4WD U = JEEP - 4WD (RHD)	72 = SPORT UTILITY 2-DR 74 = SPORT UTILITY 4-DR	ENC = 2.5L 4 Cyl Turbo Diesel Engine EPB = 2.5L 4 Cylinder Engine EPE = Engine - 2.5L Power Tech I-4 Cyl. ERH = 4.0L Power Tech I-6 Engine	DDQ = 5-Speed Manual Transmission DGS = 4-Speed Automatic AW4 Transmission DGO = ALL AUTOMATIC TRANSMISSIONS DBB = ALL MANUAL TRANSMISSIONS

Fork and Rails Select Trac (DHP)
Figure 242-910

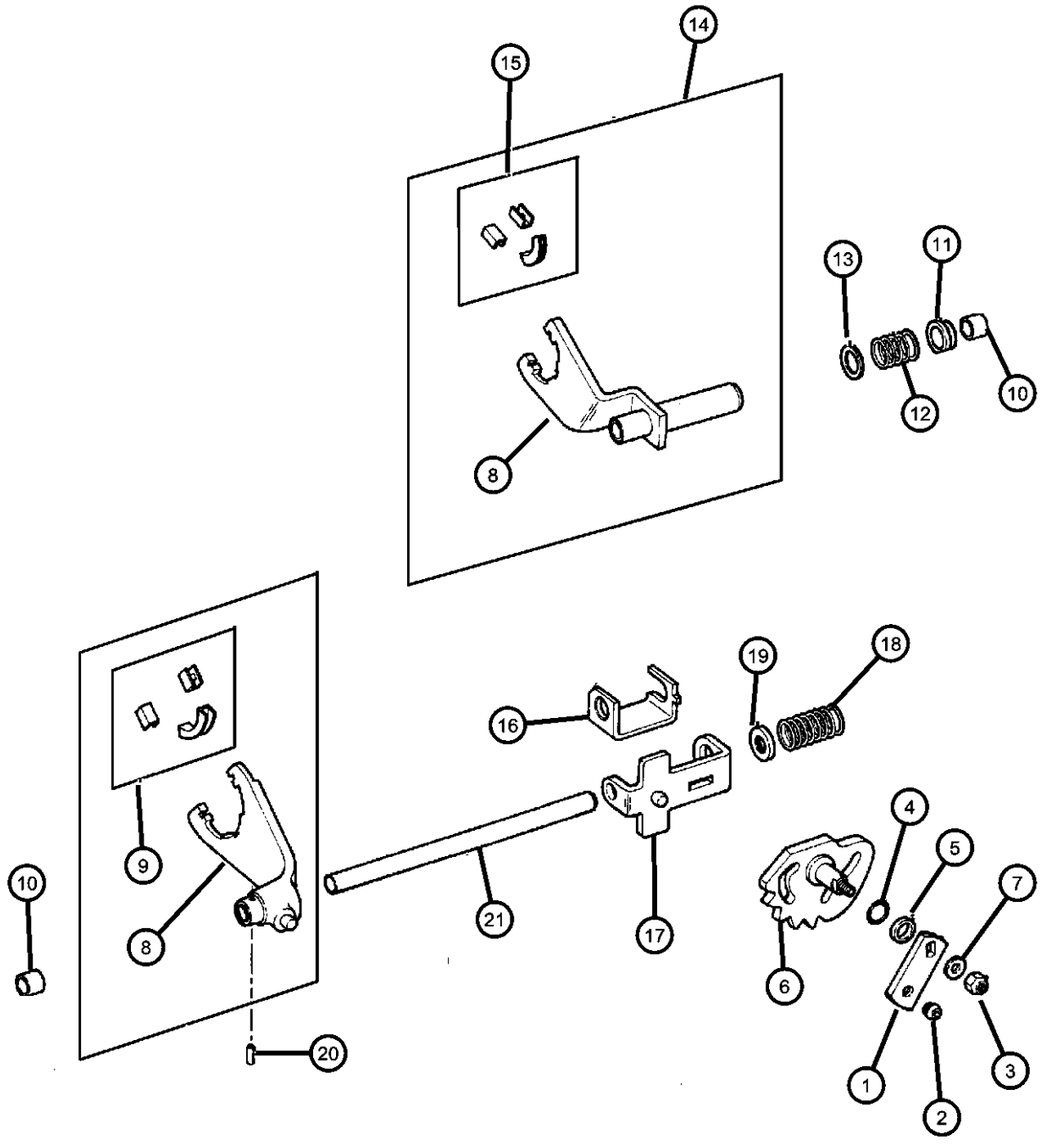

ITEM	PART NUMBER	QTY	LINE	SERIES	BODY	ENGINE	TRANS	TRIM	DESCRIPTION
21									RAIL, Transfer Case
	83504469	1	J			ER0	DG0		52111083
		1	J, U			ER0	DG0		52098899

CHEROKEE (XJ)

SERIES	LINE	BODY	ENGINE	TRANSMISSION
L = LOWLINE	T = JEEP - 2WD B = JEEP - 2WD (RHD) J = JEEP - 4WD U = JEEP - 4WD (RHD)	72 = SPORT UTILITY 2-DR 74 = SPORT UTILITY 4-DR	ENC = 2.5L 4 Cyl Turbo Diesel Engine EPB = 2.5L 4 Cylinder Engine EPE = Engine - 2.5L Power Tech I-4 Cyl. ERH = 4.0L Power Tech I-6 Engine	DDQ = 5-Speed Manual Transmission DGS = 4-Speed Automatic AW4 Transmission DGO = ALL AUTOMATIC TRANSMISSIONS DBB = ALL MANUAL TRANSMISSIONS

Gearshift Controls Select Trac (DHP)
Figure 242-1210

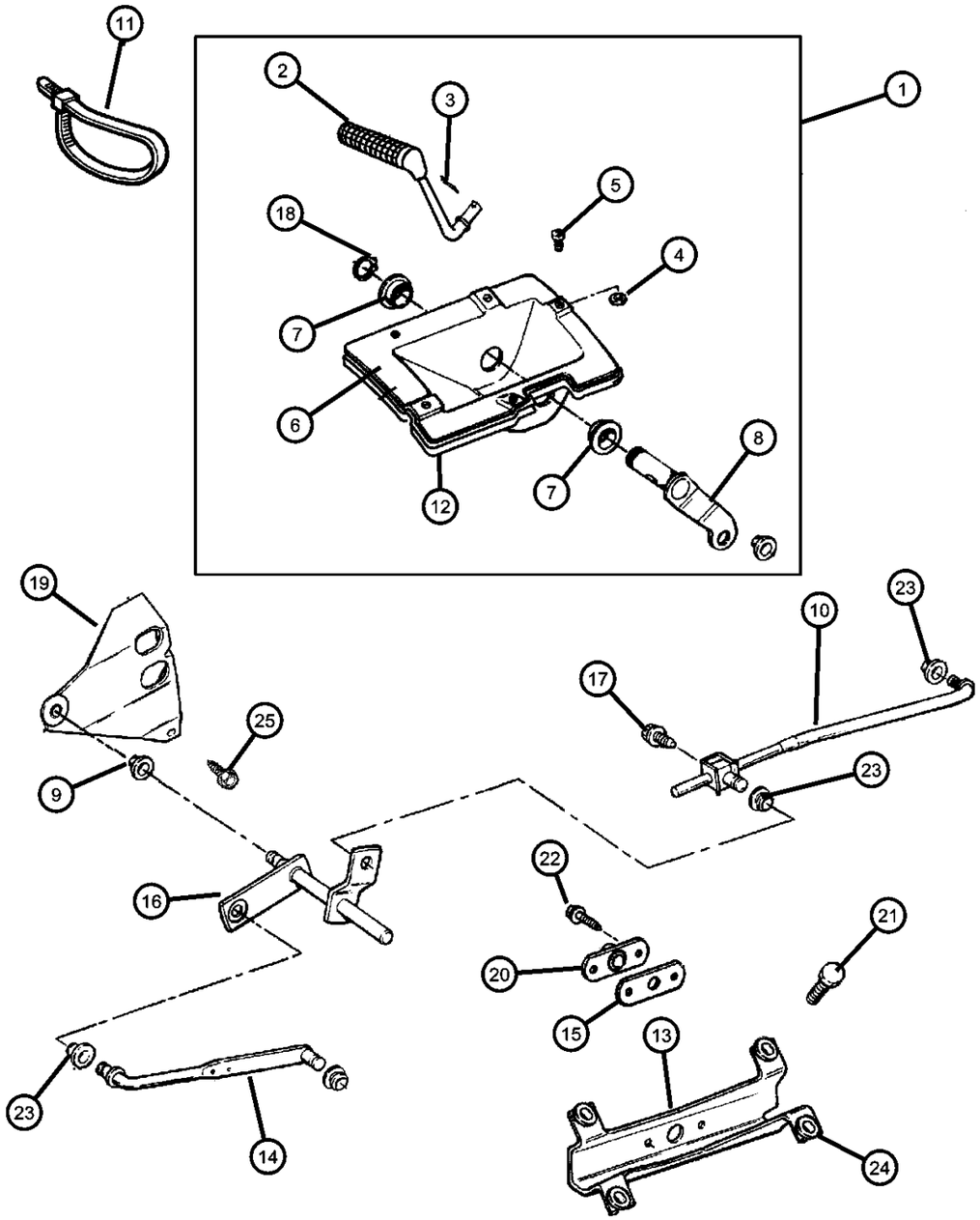

ITEM	PART NUMBER	QTY	LINE	SERIES	BODY	ENGINE	TRANS	TRIM	DESCRIPTION

Notes:
EP0= All 2.5L, 4 Cylinder, Gas Engine
ER0= All 4.0L., 6 Cylinder, Gas Engine
ENC= 2.5L 4 Cykinder Turbo Diesel Engine
DBB = All Manual Transmissions
DDQ = 5 Speed Manual Transmission
DG0 = All Automatic Transmissions

ITEM	PART NUMBER	QTY	LINE	SERIES	BODY	ENGINE	TRANS	TRIM	DESCRIPTION
1									SHIFTER, Transfer Case
	52104102	1	J				DG0		
	52104103	1	U				DG0		
2									LEVER, Transfer Case Shifter
	52079256	1	J				DG0		
		1	U				DG0		
3									PIN, Cotter
	J4006723	1	J				DG0		
		1	U				DG0		
4									NUT, Push, M5
	52077650	1	U				DG0		
	53000809	1	J				DG0		
5									FASTENER, Push On
	52077671	1	J				DG0		
		1	U				DG0		
6									HOUSING, Shift Lever
	53001284	1	J				DG0		
		1	U				DG0		
7									BUSHING, Shift Control
	53000639	2	J				DG0		
		2	U						
8									LEVER, Transfer Case
	53005150	1	J				DG0		
		1	U				DG0		
9									BUSHING, Shift Lever
	53004810	1	J			ENC	DBB		52078605
		1	J, U			EP0			53005069
		1	J, U			ER0	DDQ		52077574

CHEROKEE (XJ)

SERIES	LINE	BODY	ENGINE	TRANSMISSION
L = LOWLINE	T = JEEP - 2WD B = JEEP - 2WD (RHD) J = JEEP - 4WD U = JEEP - 4WD (RHD)	72 = SPORT UTILITY 2-DR 74 = SPORT UTILITY 4-DR	ENC = 2.5L 4 Cyl Turbo Diesel Engine EPB = 2.5L 4 Cylinder Engine EPE = Engine - 2.5L Power Tech I-4 Cyl. ERH = 4.0L Power Tech I-6 Engine	DDQ = 5-Speed Manual Transmission DGS = 4-Speed Automatic AW4 Transmission DGO = ALL AUTOMATIC TRANSMISSIONS DBB = ALL MANUAL TRANSMISSIONS

Gearshift Controls Select Trac (DHP)
Figure 242-1210

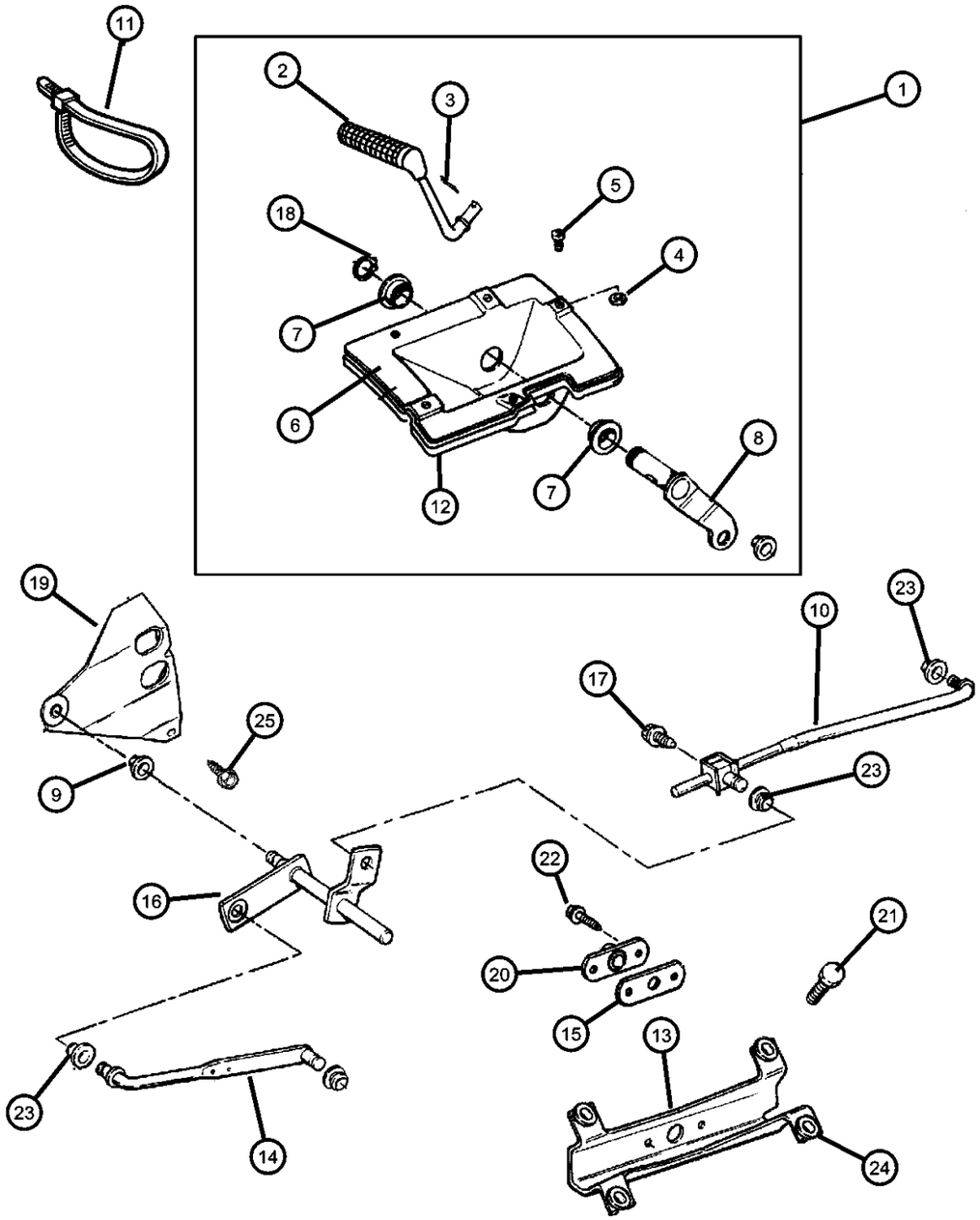

ITEM	PART NUMBER	QTY	LINE	SERIES	BODY	ENGINE	TRANS	TRIM	DESCRIPTION
		1	J, U			ER0	DG0		53005071
10									ROD, Gear Shift Control, Transfer Case
	52104073	1	J			ENC	DBB		
		1	J, U			EP0			
		1	J, U			ER0	DG0		
11									STRAP, Retaining
	J3693058	1	J				DG0		
		1	U				DG0		
12									BOOT, Transfer Case Lever
	52104019	1	J				DG0		
		1	U				DG0		
13									BRACKET, Torque Shaft
	52104017	1	J, U			EP0			
		1	J, U			ER0	DG0		
	52104018	1	J, U			ENC, ER0	DDQ		
14									ROD, Gear Shift Control, Transfer Case
	52104121	1	J, U			ENC			
	52104122	1	J, U			ER0	DBB		
	53004941	1	J, U			EP0			
	53004943	1	J, U			ER0	DG0		
15									GASKET, Gearshift Control Rod
	53005154	1	J, U			EP0			
		1	J, U			ER0	DG0		
		1	J, U			ENC, ER0	DDQ		
16									TORQUE SHAFT, Transfer Case
	53005151	1	J, U			EP0			
		1	J, U			ER0	DG0		
17	J4006036	1	J, U						BOLT, Hex Head, .312-18x.50
18									SNAP RING
	11505389	1	J				DG0		
		1	U				DG0		
19									BRACKET, Torque Shaft

CHEROKEE (XJ)

SERIES	LINE	BODY	ENGINE	TRANSMISSION
L = LOWLINE	T = JEEP - 2WD B = JEEP - 2WD (RHD) J = JEEP - 4WD U = JEEP - 4WD (RHD)	72 = SPORT UTILITY 2-DR 74 = SPORT UTILITY 4-DR	ENC = 2.5L 4 Cyl Turbo Diesel Engine EPB = 2.5L 4 Cylinder Engine EPE = Engine - 2.5L Power Tech I-4 Cyl. ERH = 4.0L Power Tech I-6 Engine	DDQ = 5-Speed Manual Transmission DGS = 4-Speed Automatic AW4 Transmission DGO = ALL AUTOMATIC TRANSMISSIONS DBB = ALL MANUAL TRANSMISSIONS

AR = use ase required - = Non illustrrated part

Gearshift Controls Select Trac (DHP)
Figure 242-1210

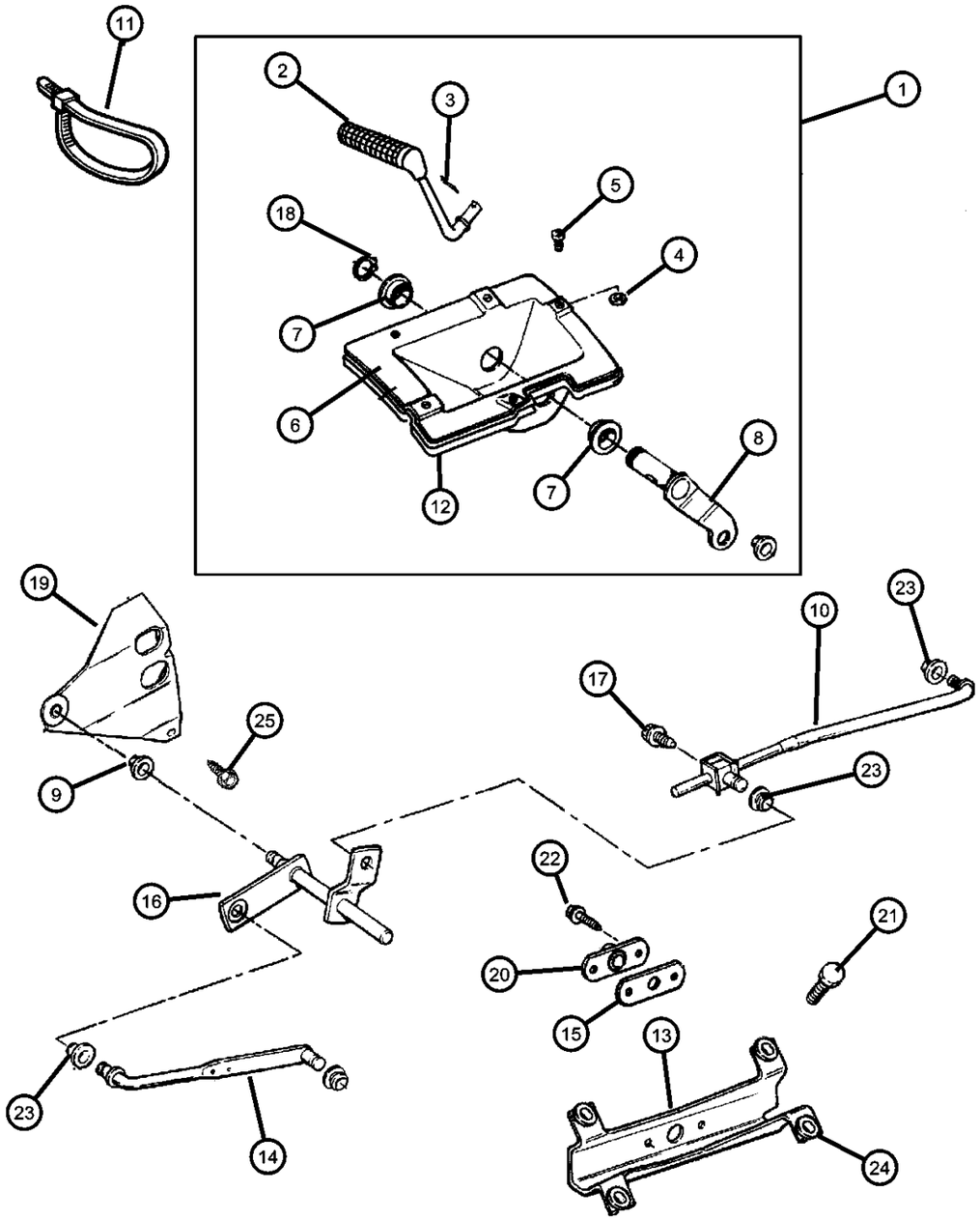

ITEM	PART NUMBER	QTY	LINE	SERIES	BODY	ENGINE	TRANS	TRIM	DESCRIPTION
	52077574	1	J, U			ER0	DDQ		
	52078605	1	J, U			ENC	DBB		
	53005069	1	J, U			EP0			
	53005071	1	J, U			ER0	DG0		
20									BEARING, Transfer Case Shift
	52078134	1	J, U			EP0			
		1	J, U			ER0	DG0		
		1	J, U			ENC, ER0	DDQ		
21	06503811	4	J, U						BOLT, Hex Head, M6x1.00x20.00
22									SCREW, Hex Flange Head Tapping, M6x1.00x20.00
	34201691	2	J, U			ENC, ER0	DDQ		
		2	J, U			EP0	DG0		
23									GROMMET, Control Rod Front
	03575333	AR	U				DG0		
		AR	J				DG0		
24									GROMMET
	52104014	4	J			EP0			
		4	J			ER0	DG0		
		4	J			ENC, ER0	DDQ		
25	11504336	1	J, U			ER0	DG0		BOLT, Hex Head, M8x1.25x16

CHEROKEE (XJ)

SERIES	LINE	BODY	ENGINE	TRANSMISSION
L = LOWLINE	T = JEEP - 2WD B = JEEP - 2WD (RHD) J = JEEP - 4WD U = JEEP - 4WD (RHD)	72 = SPORT UTILITY 2-DR 74 = SPORT UTILITY 4-DR	ENC = 2.5L 4 Cyl Turbo Diesel Engine EPB = 2.5L 4 Cylinder Engine EPE = Engine - 2.5L Power Tech I-4 Cyl. ERH = 4.0L Power Tech I-6 Engine	DDQ = 5-Speed Manual Transmission DGS = 4-Speed Automatic AW4 Transmission DGO = ALL AUTOMATIC TRANSMISSIONS DBB = ALL MANUAL TRANSMISSIONS

AR = use ase required - = Non illustrrated part

<< RETURN TO GROUP INDEX

Group - 21P

Speedometer Pinions

21P-100 Speedometer Pinions 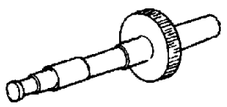			

Group - 21P Speedometer Pinions

Illustration Title — Group-Fig. No.

Speedometer Pinions

Speedometer Pinion ..... Fig. 21P - 110

Speedometer Pinion
Figure 21P-110

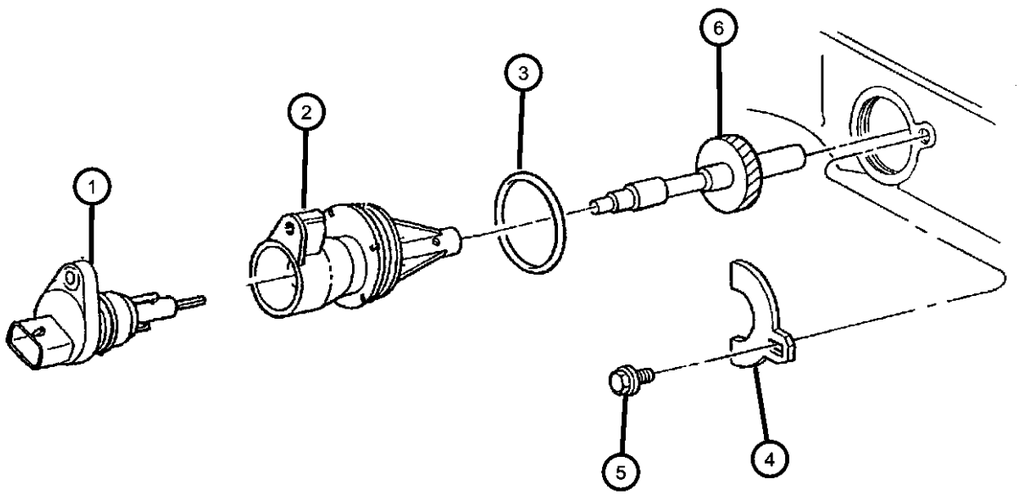

ITEM	PART NUMBER	QTY	LINE	SERIES	BODY	ENGINE	TRANS	TRIM	DESCRIPTION
1	56028183	1							SENSOR, Vehicle Speed
2	52069315	1							HOUSING, Speedometer Drive Gear
3	06035709	1							O RING, Trans Speedo Adapter
4	02892399	1							CLAMP, Speedometer
5	00180077	1							BOLT, Hex Head, 5/16x18x3/4
6									PINION, Speedometer Drive
	52067629	1							3.07 AXLE RATIO, 29 Teeth. P225/75R15 Wrangler RT/S AT
	52067630	1							3.07 AXLE RATIO, 30 Teeth. All P215/75R15/R16/R17, P225/70R15 (OWL) eagle GA A/S.
	52067633	1							3.50 AXLE RATIO, 33 Teeth. P225/75R15 Wrangler RT/S AT Michelin.
	52067634	1							3.50 AXLE RATIO, 34 Teeth. P225/75R15 Wrangler RT/S AT Goodyear.
	52067635	1							3.50 AXLE RATIO, 35 Teeth P215/75R15 BSW A/S Wrangler AP
		1							3.50 AXLE RATIO, 35 Teeth. P225/70R15 High Speed Rated Eagle GA, P225/70R15 (OWL) Eagle GA A/S.
		1							3.70 AXLE RATIO, 35 Teeth. P225/75R15 Wrangl;er RT/S AT Michelin.
	52067636	1							3.70 AXLE RATIO, 36 Teeth. P225/75R15 Wrangler RT/S AT, P225/75R15 (OWL) A/S Goodyear Tires.
	52067637	1							3.70 AXLE RATIO, 37 Teeth. All P215R15/R16/R17 Tires. P225/70R15 (OWL) Eagle GA A/S Tires.
	52067639	1				EPE			4.11 AXLE RATIO, 39 Teeth. P215/75R15 Wrangler RT/S AT .
	52067640	1				EPE			4.11 AXLE RATIO, 40 Teeth. All P215R15/R16/R17 Tires.
	52067641	1				EPE, ER0			4.11 AXLE RATIO, 41 Teeth. P225/70R15 (OWL) A/S.

CHEROKEE (XJ)

SERIES	LINE	BODY	ENGINE	TRANSMISSION
L = LOWLINE	T = JEEP - 2WD B = JEEP - 2WD (RHD) J = JEEP - 4WD U = JEEP - 4WD (RHD)	72 = SPORT UTILITY 2-DR 74 = SPORT UTILITY 4-DR	ENC = 2.5L 4 Cyl Turbo Diesel Engine EPB = 2.5L 4 Cylinder Engine EPE = Engine - 2.5L Power Tech I-4 Cyl. ERH = 4.0L Power Tech I-6 Engine	DDQ = 5-Speed Manual Transmission DGS = 4-Speed Automatic AW4 Transmission DGO = ALL AUTOMATIC TRANSMISSIONS DBB = ALL MANUAL TRANSMISSIONS

Group - 22

Wheels, Covers and Jacks

022-100 Wheels and Hardware	022-200 Wheel Covers and Center Caps	022-300 Jack Stowage	022-400 Spare Tire Stowage
	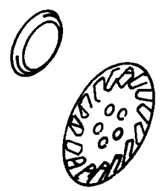	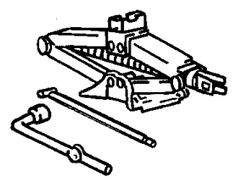	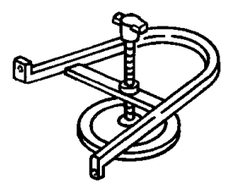

Group - 22 Wheels, Covers and Jacks

Illustration Title — Group-Fig. No.

Wheels and Hardware
Wheels and Hardware ..... Fig. 22 - 120

Wheel Covers and Center Caps
Wheel Cap ..... Fig. 22 - 220

Jack Stowage
Jack Stowage ..... Fig. 22 - 310

Spare Tire Stowage
Wheel, Spare ..... Fig. 22 - 430
Wheel, Spare ..... Fig. 22 - 440

Wheels and Hardware
Figure 22-120

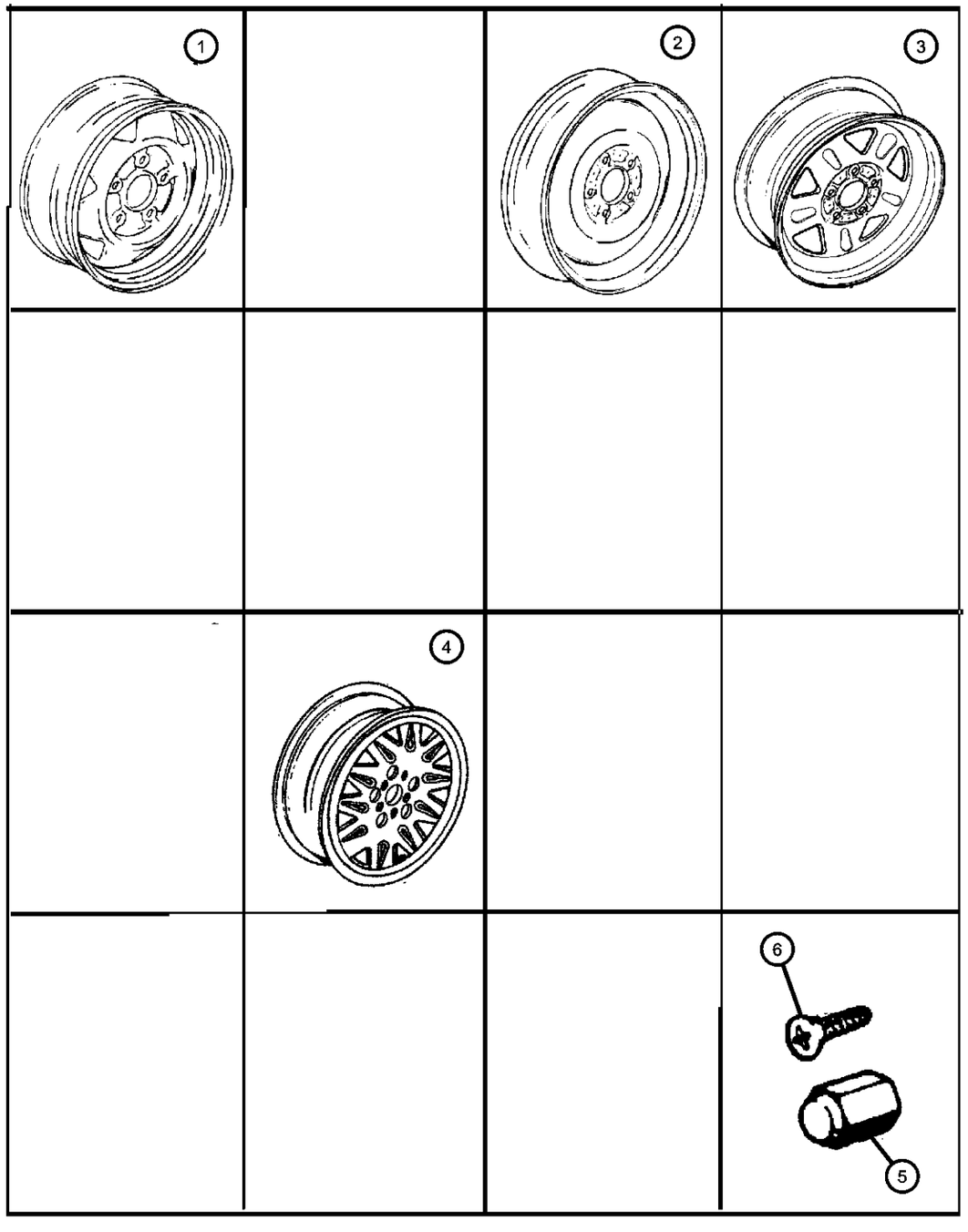

ITEM	PART NUMBER	QTY	LINE	SERIES	BODY	ENGINE	TRANS	TRIM	DESCRIPTION

Note: Sales Code WJD = Wheels, 15x7.0 Styled Steel
Note: Sales Code WJW = Wheels, 15x7.0 Aluminum
Note: Sales Code WJ5 = Wheels, 15x7.0 Full Face Steel
Note: Sales Code WJ7 = Wheels, 15x7.0 Luxury Aluminum

1	5EW03T4A	4	WHEEL, Steel, WJD
2	52000019	1	WHEEL, Spare
3	5FV63S4A	4	WHEEL, Steel, WJ5
4			WHEEL, Aluminum
	5CC18KS7	4	Dark Silver WJ7
	5EE80TAE	4	Light Silver WJW
5	J4006956	20	NUT, Wheel, .50x20
6	34202523	12	SCREW, Hex Flange Head, M4.8x1.59x11.00

CHEROKEE (XJ)

SERIES	LINE	BODY	ENGINE	TRANSMISSION
L = LOWLINE	T = JEEP - 2WD B = JEEP - 2WD (RHD) J = JEEP - 4WD U = JEEP - 4WD (RHD)	72 = SPORT UTILITY 2-DR 74 = SPORT UTILITY 4-DR	ENC = 2.5L 4 Cyl Turbo Diesel Engine EPB = 2.5L 4 Cylinder Engine EPE = Engine - 2.5L Power Tech I-4 Cyl. ERH = 4.0L Power Tech I-6 Engine	DDQ = 5-Speed Manual Transmission DGS = 4-Speed Automatic AW4 Transmission DGO = ALL AUTOMATIC TRANSMISSIONS DBB = ALL MANUAL TRANSMISSIONS

Wheel Cap
Figure 22-220

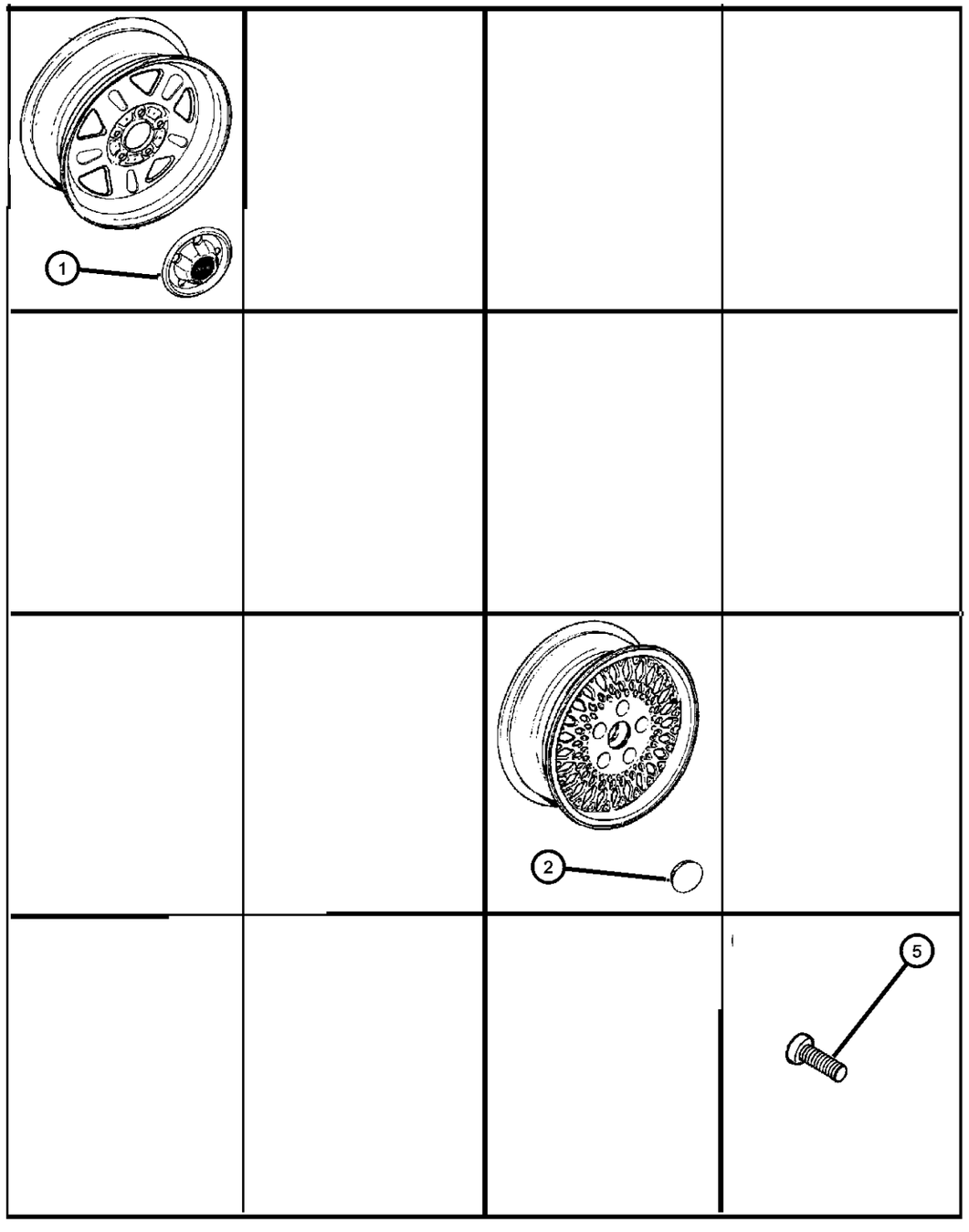

ITEM	PART NUMBER	QTY	LINE	SERIES	BODY	ENGINE	TRANS	TRIM	DESCRIPTION

Note: Sales Code WJ7 = Wheels, 15x7.0 Luxury Aluminum
Note: Sales Code WJ5 = Wheels, 15x7.0 Full Face Steel
Note: Sales Code WJW = Wheels, 15x7.0 Aluminum
Note: Sales Code WJD = Wheels, 15x7.0 Styled Steel

1	52089008	4	CAP, Wheel Center, WJD
2	5CF97L3X	4	CAP, Wheel Center, Brushed Aluminum "Jeep" Name, WJ7
-3	5DY07TAK	4	CAP, Wheel Center, WJW
-4	5CF34L4A	4	CAP, Wheel Center, WJ5
5	34202523	12	SCREW, Hex Flange Head, M4.8x1.59x11.00

CHEROKEE (XJ)

SERIES	LINE	BODY	ENGINE	TRANSMISSION
L = LOWLINE	T = JEEP - 2WD B = JEEP - 2WD (RHD) J = JEEP - 4WD U = JEEP - 4WD (RHD)	72 = SPORT UTILITY 2-DR 74 = SPORT UTILITY 4-DR	ENC = 2.5L 4 Cyl Turbo Diesel Engine EPB = 2.5L 4 Cylinder Engine EPE = Engine - 2.5L Power Tech I-4 Cyl. ERH = 4.0L Power Tech I-6 Engine	DDQ = 5-Speed Manual Transmission DGS = 4-Speed Automatic AW4 Transmission DGO = ALL AUTOMATIC TRANSMISSIONS DBB = ALL MANUAL TRANSMISSIONS

Jack Stowage
Figure 22-310

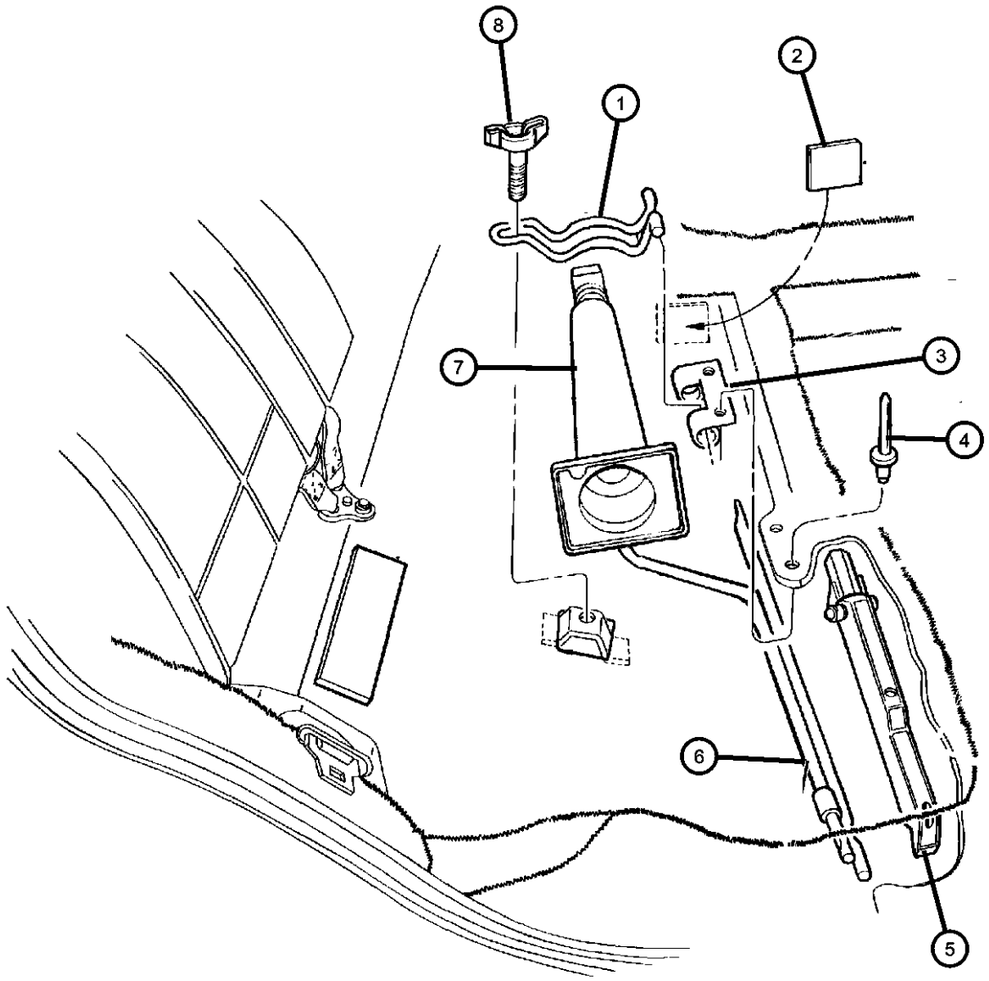

ITEM	PART NUMBER	QTY	LINE	SERIES	BODY	ENGINE	TRANS	TRIM	DESCRIPTION
1	52003474	1							RETAINER, Jack Hold Down
2	52004650	1							LABEL, Jack Ok
3	52001202	1							BRACKET, Jack
4	34201684	2							RIVET, M3.18x2.37
5	52003583	1							WRENCH, Wheel Lug Nut
6	52000221	1							HANDLE, Jack
7	52088450	1							JACK
8	52000354	1							WINGSCREW

CHEROKEE (XJ)

SERIES	LINE	BODY	ENGINE	TRANSMISSION
L = LOWLINE	T = JEEP - 2WD B = JEEP - 2WD (RHD) J = JEEP - 4WD U = JEEP - 4WD (RHD)	72 = SPORT UTILITY 2-DR 74 = SPORT UTILITY 4-DR	ENC = 2.5L 4 Cyl Turbo Diesel Engine EPB = 2.5L 4 Cylinder Engine EPE = Engine - 2.5L Power Tech I-4 Cyl. ERH = 4.0L Power Tech I-6 Engine	DDQ = 5-Speed Manual Transmission DGS = 4-Speed Automatic AW4 Transmission DGO = ALL AUTOMATIC TRANSMISSIONS DBB = ALL MANUAL TRANSMISSIONS

Wheel, Spare
Figure 22-430

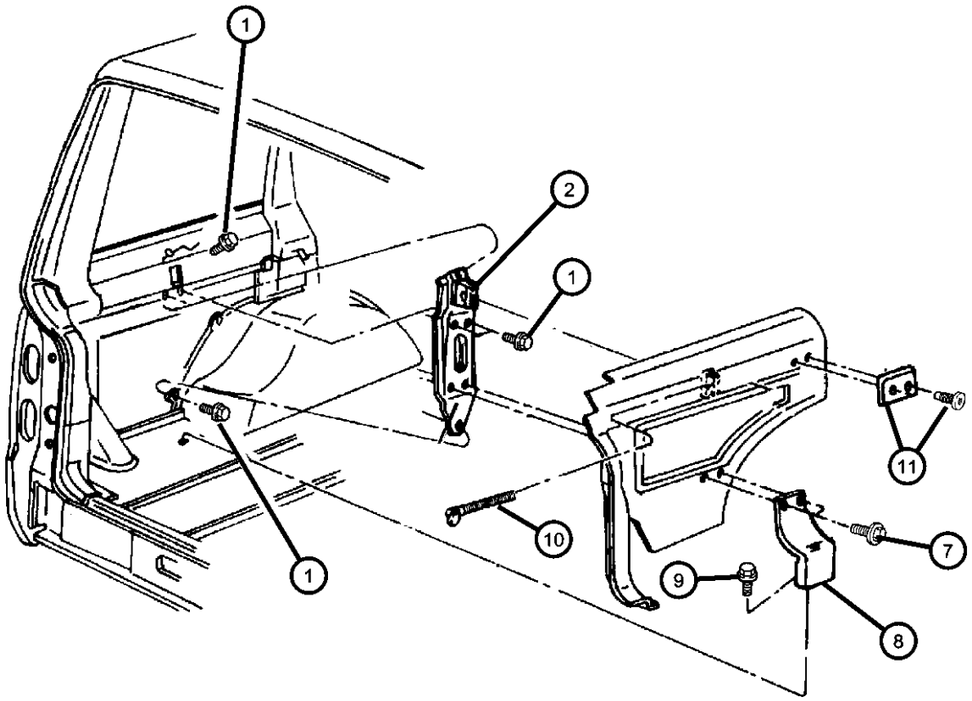

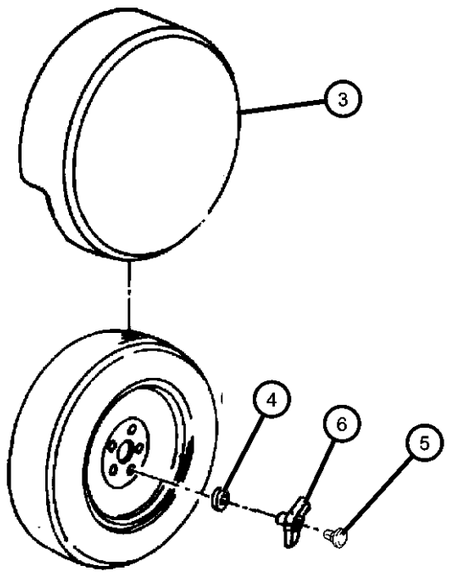

ITEM	PART NUMBER	QTY	LINE	SERIES	BODY	ENGINE	TRANS	TRIM	DESCRIPTION
1	34201381	4							SCREW, Hex Flange Head Tapping, M6x1.00x20.00
2	55235195	1	J, T						BRACKET, Swing Bolt Retainer
3									COVER, Inside Spare Tire
	5FM74TC3	1							Agate, Compact Spare
	5FM74TT6	1							Spice, Compact Spare
	5FM76TC3	1							Agate, Spare Tire
	5FM76TT6	1							Spice, Spare Tire
4	52087669	1	J, T						CUP, Spare Tire Retention
5	52000733	1							CAP, Spare Tire Wing Nut
6	06503070	1							WINGNUT, Jack and Tire Hold Down
7	34201610	2							SCREW AND WASHER, Hex Head, M6x1x30
8	55000859	1	J, T						BRACKET, Spare Tire
9	03820898	1	J, U						SCREW
10	55235181	1	J, T						BOLT, Spare Wheel Hold Down
11	55235181	1							REST, Spare Tire, (NOT SERVICED)
-12	52088459	1							PAD, Spare Tire

CHEROKEE (XJ)

SERIES	LINE	BODY	ENGINE	TRANSMISSION
L = LOWLINE	T = JEEP - 2WD B = JEEP - 2WD (RHD) J = JEEP - 4WD U = JEEP - 4WD (RHD)	72 = SPORT UTILITY 2-DR 74 = SPORT UTILITY 4-DR	ENC = 2.5L 4 Cyl Turbo Diesel Engine EPB = 2.5L 4 Cylinder Engine EPE = Engine - 2.5L Power Tech I-4 Cyl. ERH = 4.0L Power Tech I-6 Engine	DDQ = 5-Speed Manual Transmission DGS = 4-Speed Automatic AW4 Transmission DGO = ALL AUTOMATIC TRANSMISSIONS DBB = ALL MANUAL TRANSMISSIONS

Wheel, Spare
Figure 22-440

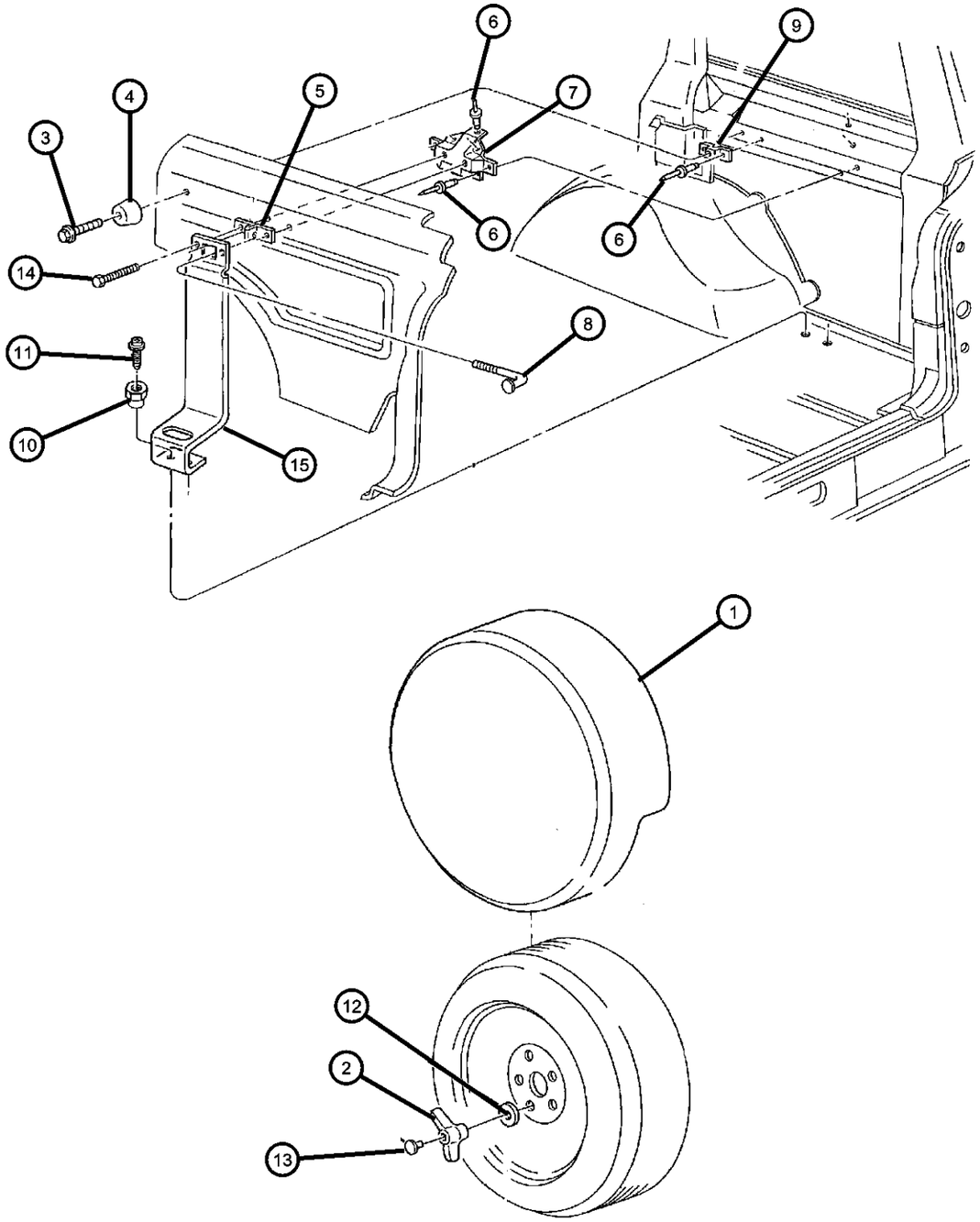

ITEM	PART NUMBER	QTY	LINE	SERIES	BODY	ENGINE	TRANS	TRIM	DESCRIPTION
1									COVER, Inside Spare Tire
	5FM76TC3	1							Gray
	5FM76TT6	1							Spice
2	06503070	1							WINGNUT, Jack and Tire Hold Down
3	06503070	1							SCREW AND WASHER, Hex Head, M8x1.25x20, (NOT SERVICED)
4	06503070	1							REST, Spare Tire, (NOT SERVICED)
5	55345292	1	B, U						BRACKET, Swing Bolt Retainer
6	34201197	2	B, U						RIVET, Blind, M3.17x10.00
7	55235367	1	B, U						BRACKET, Spare Tire
8	55235181	1	J, T						BOLT, Spare Wheel Hold Down
9	55235181	1							BRACKET, Spare Tire, (NOT SERVICED)
10	06502751	2	B, U						NUT/RIVET, Round, M6.00 x 1.00 x 15.00
11	34201661	2	B, U						SCREW AND WASHER, Button Head
12	52087669	1	J, T						CUP, Spare Tire Retention
13	52000733	1							CAP, Spare Tire Wing Nut
14	52000733	1							SCREW, (NOT SERVICED)
15	55344556	1	B, U						BRACKET, Spare Tire

CHEROKEE (XJ)

SERIES	LINE	BODY	ENGINE	TRANSMISSION
L = LOWLINE	T = JEEP - 2WD B = JEEP - 2WD (RHD) J = JEEP - 4WD U = JEEP - 4WD (RHD)	72 = SPORT UTILITY 2-DR 74 = SPORT UTILITY 4-DR	ENC = 2.5L 4 Cyl Turbo Diesel Engine EPB = 2.5L 4 Cylinder Engine EPE = Engine - 2.5L Power Tech I-4 Cyl. ERH = 4.0L Power Tech I-6 Engine	DDQ = 5-Speed Manual Transmission DGS = 4-Speed Automatic AW4 Transmission DGO = ALL AUTOMATIC TRANSMISSIONS DBB = ALL MANUAL TRANSMISSIONS

Group - 23D

Wiper/Lock Cylinder and Keys

23D-100 Lock Cylinders and Keys 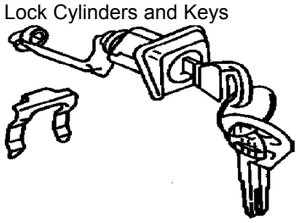	**23D-200** Windshield Wiper and Washer Systems 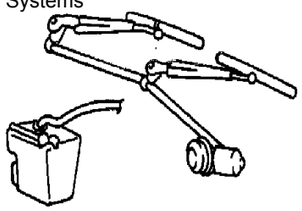	**23D-300** Rear Wiper and Washer System 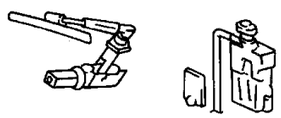	

Group - 23D Wiper/Lock Cylinder and Keys

Illustration Title — Group-Fig. No.

Lock Cylinders and Keys
Lock Cylinders and Keys ..... Fig. 23D - 120

Windshield Wiper and Washer Systems
Windshield Wiper & Washer L.H.D. ..... Fig. 23D - 220
Windshield Wiper & Washer R.H.D. ..... Fig. 23D - 222

Rear Wiper and Washer System
Rear Wiper & Washer ..... Fig. 23D - 320

Lock Cylinders and Keys
Figure 23D-120

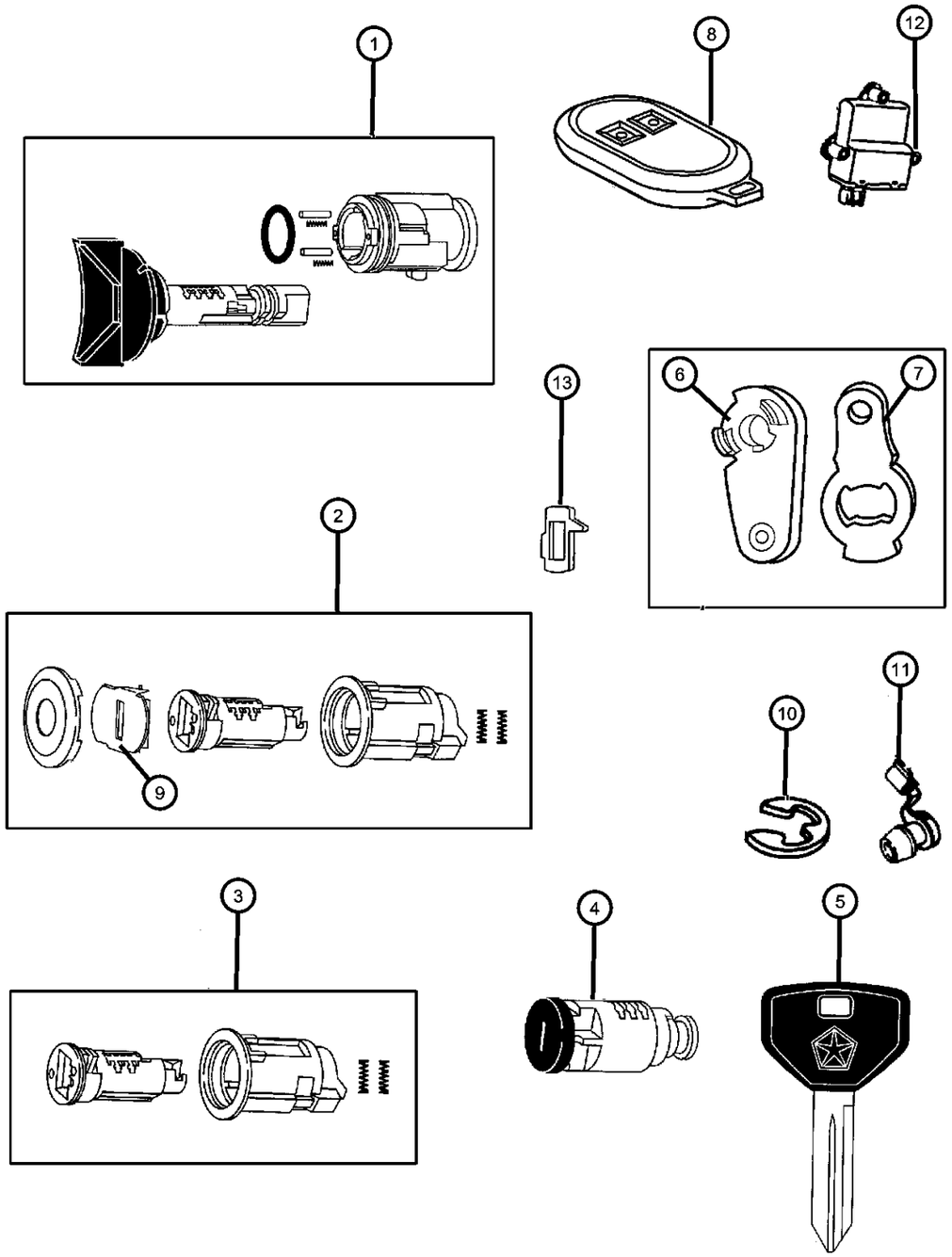

ITEM	PART NUMBER	QTY	LINE	SERIES	BODY	ENGINE	TRANS	TRIM	DESCRIPTION
1	04746667	1							CYLINDER LOCK PACKAGE, Ignition, Black Plastic
2	04864651	1							CYLINDER, Door Lock
3	04778125	1							CYLINDER LOCK PACKAGE, Door or Liftgate, Bright
4	04746315	AR							CYLINDER, Glove Box Lock
5	04746316	2							KEY, Blank
6	55075824	1							LEVER, Door Lock Cylinder
7	55075838	1							LEVER, Liftgate Lock Cylinder
8									TRANSMITTER, Keyless Entry
	56008968	1							w/o Immobilizer
	56008969	1							w/ Immobilizer
9	04778150	1							SHUTTER, Door, Deck and Liftgate, Bright
10	06026125	1							CLIP, Cylinder Retainer
11									CLIP, Latch
	04658444	1							Purple
	04658445	1							Orange
12									RECEIVER, Keyless Entry
	56009387AB	1							w/Full Console EUROPE
	56009390AB	1							w/Full Console
		1							w/ mini Dome EUROPE
13	05257132	AR							TUMBLER, Ignition Number 1
-14	05257133	AR							TUMBLER, Ignition Number 2
-15	05257134	AR							TUMBLER, Ignition Number 3
-16	05257135	AR							TUMBLER, Ignition Number 4
-17	04778117	1							TUMBLER, Door and Deck Number 1, Wide
-18	04778118	1							TUMBLER, Door and Deck Number 2, Wide
-19	04778119	1							TUMBLER, Door and Deck Number 3, Wide
-20	04378793	1							SPRING, Cylinder Return
-21	04778120	1							TUMBLER, Door and Deck Number 4, Wide
-22	04778121	1							SPRING, Door and Deck Tumbler
-23	56009389	2							TRANSMITTER, Anti Theft

CHEROKEE (XJ)

SERIES	LINE	BODY	ENGINE	TRANSMISSION
L = LOWLINE	T = JEEP - 2WD B = JEEP - 2WD (RHD) J = JEEP - 4WD U = JEEP - 4WD (RHD)	72 = SPORT UTILITY 2-DR 74 = SPORT UTILITY 4-DR	ENC = 2.5L 4 Cyl Turbo Diesel Engine EPB = 2.5L 4 Cylinder Engine EPE = Engine - 2.5L Power Tech I-4 Cyl. ERH = 4.0L Power Tech I-6 Engine	DDQ = 5-Speed Manual Transmission DGS = 4-Speed Automatic AW4 Transmission DGO = ALL AUTOMATIC TRANSMISSIONS DBB = ALL MANUAL TRANSMISSIONS

AR = use ase required - = Non illustrrated part

Lock Cylinders and Keys
Figure 23D-120

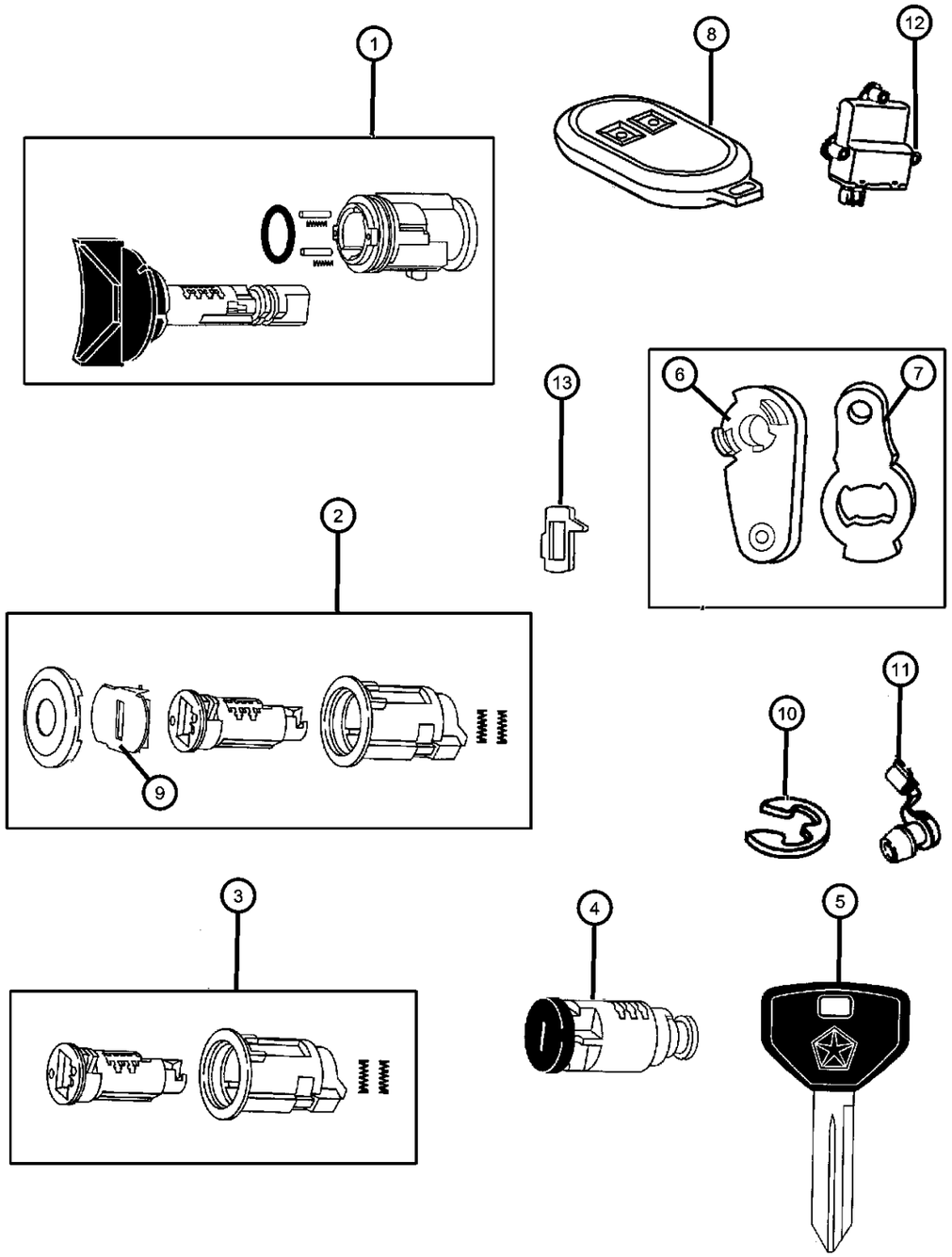

ITEM	PART NUMBER	QTY	LINE	SERIES	BODY	ENGINE	TRANS	TRIM	DESCRIPTION
-24	56009920AA	1							LABEL, General Information, EUROPE
-25	56009388AB	1							RECEIVER, Vehicle Immobilizer, w/Mini Dome EUROPE
-26	55235561	2							GASKET, Door Lock Cylinder, Black
-27	83504802	2							BATTERY, Transmitter
-28	55295904	2							RETAINER, Door Cylinder To Handle
-29	05003382AA	1							MODULE PACKAGE, Keyless Entry, EUROPE

CHEROKEE (XJ)

SERIES	LINE	BODY	ENGINE	TRANSMISSION
L = LOWLINE	T = JEEP - 2WD B = JEEP - 2WD (RHD) J = JEEP - 4WD U = JEEP - 4WD (RHD)	72 = SPORT UTILITY 2-DR 74 = SPORT UTILITY 4-DR	ENC = 2.5L 4 Cyl Turbo Diesel Engine EPB = 2.5L 4 Cylinder Engine EPE = Engine - 2.5L Power Tech I-4 Cyl. ERH = 4.0L Power Tech I-6 Engine	DDQ = 5-Speed Manual Transmission DGS = 4-Speed Automatic AW4 Transmission DGO = ALL AUTOMATIC TRANSMISSIONS DBB = ALL MANUAL TRANSMISSIONS

Windshield Wiper & Washer L.H.D.
Figure 23D-220

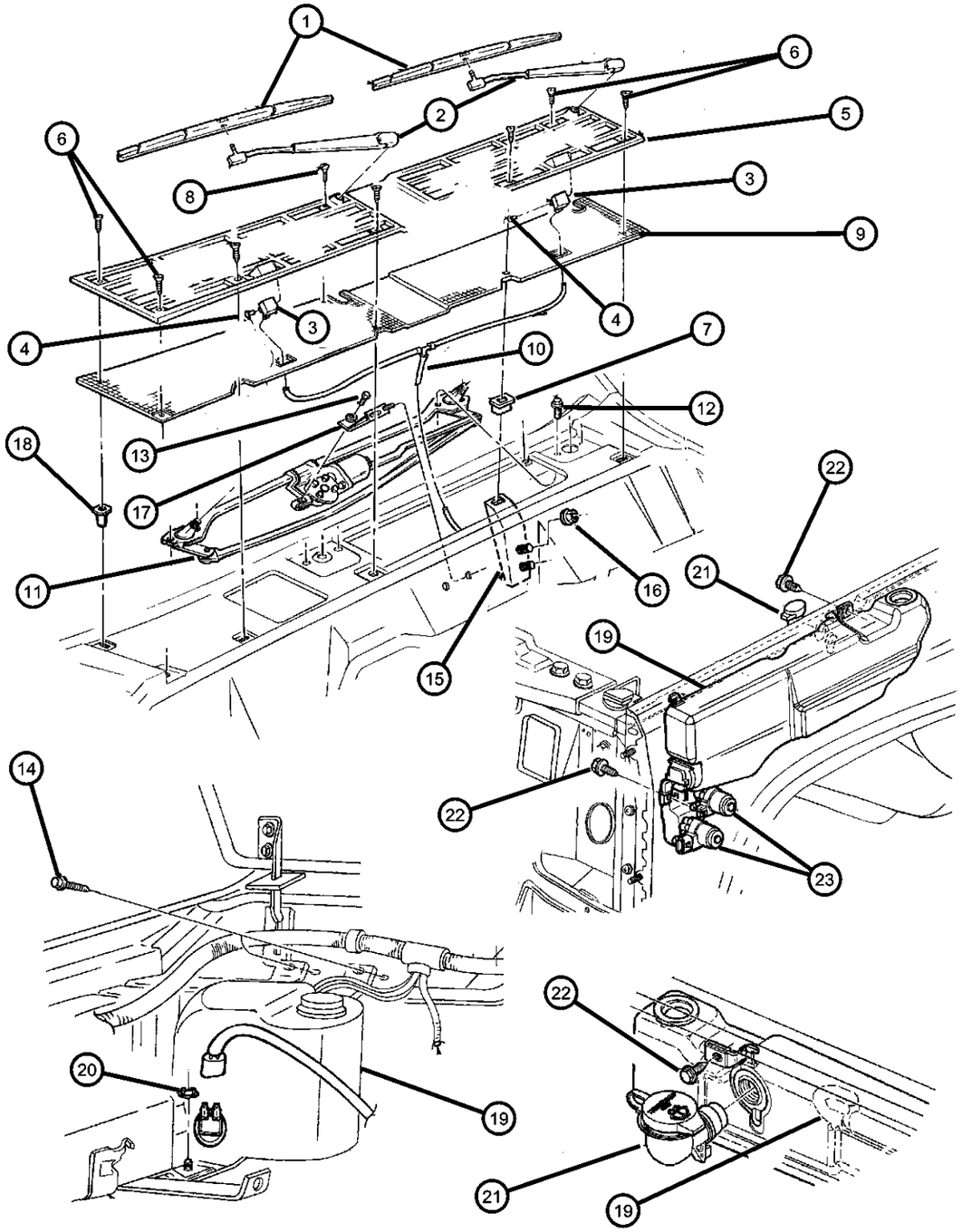

ITEM	PART NUMBER	QTY	LINE	SERIES	BODY	ENGINE	TRANS	TRIM	DESCRIPTION
1	55155650	2	J, T						BLADE, Wiper
2	55155649	2	J, T						ARM, Wiper
3	56001601	2							NOZZLE, Washer, Windshield
4	J4004262	2							PIN, Push, .15x.41
5	55008832	1	J, T						GRILLE, Cowl Panel
6	34201230	7							SCREW, Round Washer Head AB
7	34201872	2							NUT, Snap In, M4.2 x 1.41
8	34201872	2							SCREW, .164-18x.625, (NOT SERVICED)
9	55008833	1	J, T						SCREEN, Cowl
10	55008833	1							HOSE, Windshield Washer, (NOT SERVICED)
11	55155297	1	J, T						MOTOR, Wiper
12	34201496	4							SCREW, Pan Plastite, M7.25x3.18x25.00
13	34201686	1							BOLT, Hex Flange Head, M12x1.18x35
14	06101786	2							SCREW, Self Tapping, M6x1x15
15	55235370	1	J, T						BRACKET, Grille To Cowl Extension
16	34201358	1	J, T						NUT AND WASHER, Hex Nut-Sealing Washer, M6 x 1.00
17	55154526	1	J, T						BRACKET, Wiper Motor
18	J4005242	5							NUT, Push
19									RESERVOIR, Washer
	04778344	1							w/Sensor
	04778345	1							w/oSensor
20	06100047	1							NUT AND WASHER, Hex Nut-Coned Washer, M6 x 1.00
21	55154812	1							FILLER NECK AND CAP, Washer Reservoir
22	06033567	2							BOLT AND WASHER, Hex Head, .19-16x.75
23									PUMP, Washer, Windshield
	04778347	1							Front
	04778348	1							Rear
-24	04630249	1							CAP, Washer Reservoir

CHEROKEE (XJ)

SERIES	LINE	BODY	ENGINE	TRANSMISSION
L = LOWLINE	T = JEEP - 2WD B = JEEP - 2WD (RHD) J = JEEP - 4WD U = JEEP - 4WD (RHD)	72 = SPORT UTILITY 2-DR 74 = SPORT UTILITY 4-DR	ENC = 2.5L 4 Cyl Turbo Diesel Engine EPB = 2.5L 4 Cylinder Engine EPE = Engine - 2.5L Power Tech I-4 Cyl. ERH = 4.0L Power Tech I-6 Engine	DDQ = 5-Speed Manual Transmission DGS = 4-Speed Automatic AW4 Transmission DGO = ALL AUTOMATIC TRANSMISSIONS DBB = ALL MANUAL TRANSMISSIONS

Windshield Wiper & Washer L.H.D.
Figure 23D-220

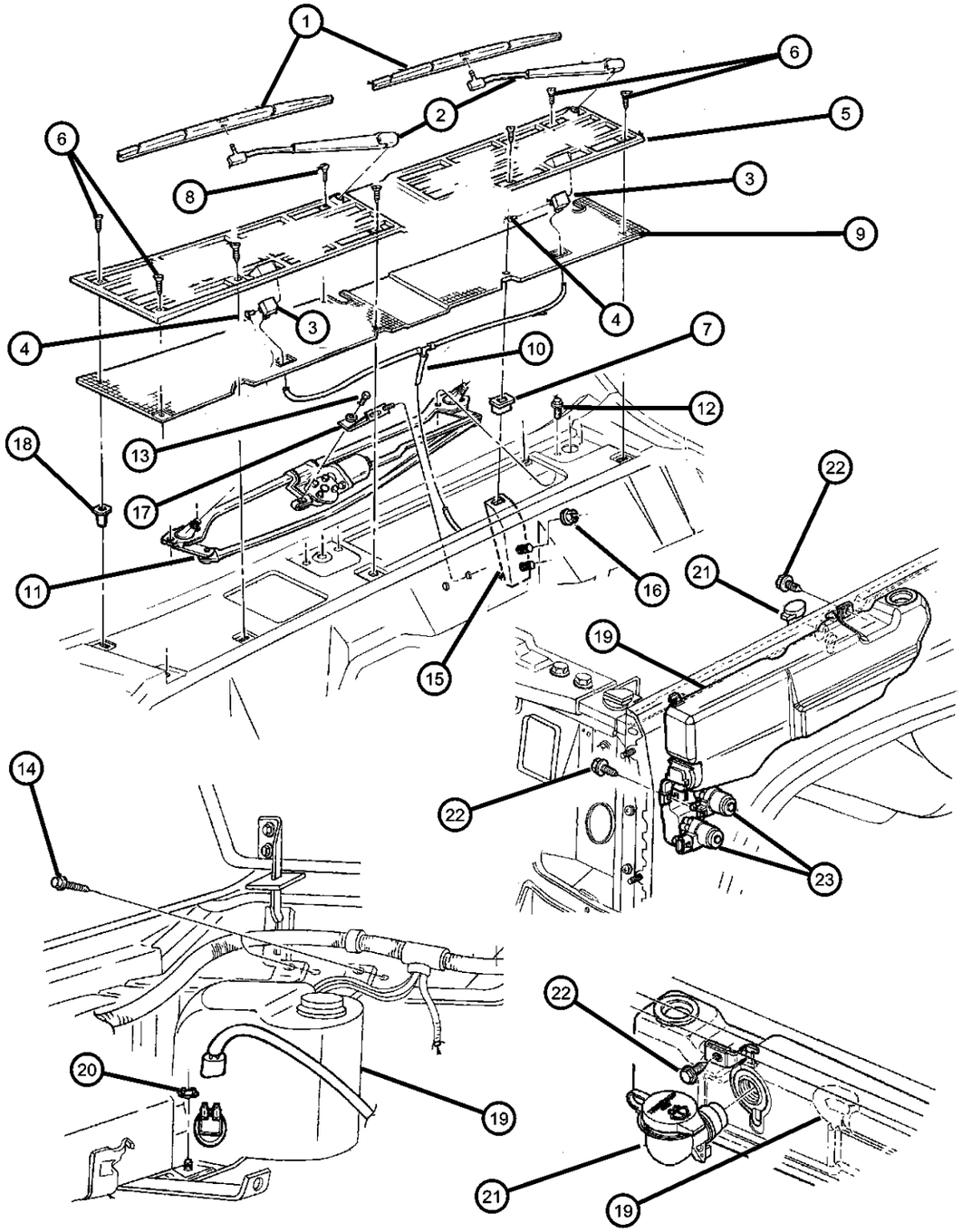

ITEM	PART NUMBER	QTY	LINE	SERIES	BODY	ENGINE	TRANS	TRIM	DESCRIPTION
-25	04778346	1							GROMMET, Washer Reservoir, Sensor/Pump
-26	04778350	1							GROMMET, Washer Reservoir, Filler Neck

CHEROKEE (XJ)

SERIES	LINE	BODY	ENGINE	TRANSMISSION
L = LOWLINE	T = JEEP - 2WD B = JEEP - 2WD (RHD) J = JEEP - 4WD U = JEEP - 4WD (RHD)	72 = SPORT UTILITY 2-DR 74 = SPORT UTILITY 4-DR	ENC = 2.5L 4 Cyl Turbo Diesel Engine EPB = 2.5L 4 Cylinder Engine EPE = Engine - 2.5L Power Tech I-4 Cyl. ERH = 4.0L Power Tech I-6 Engine	DDQ = 5-Speed Manual Transmission DGS = 4-Speed Automatic AW4 Transmission DGO = ALL AUTOMATIC TRANSMISSIONS DBB = ALL MANUAL TRANSMISSIONS

Windshield Wiper & Washer R.H.D.
Figure 23D-222

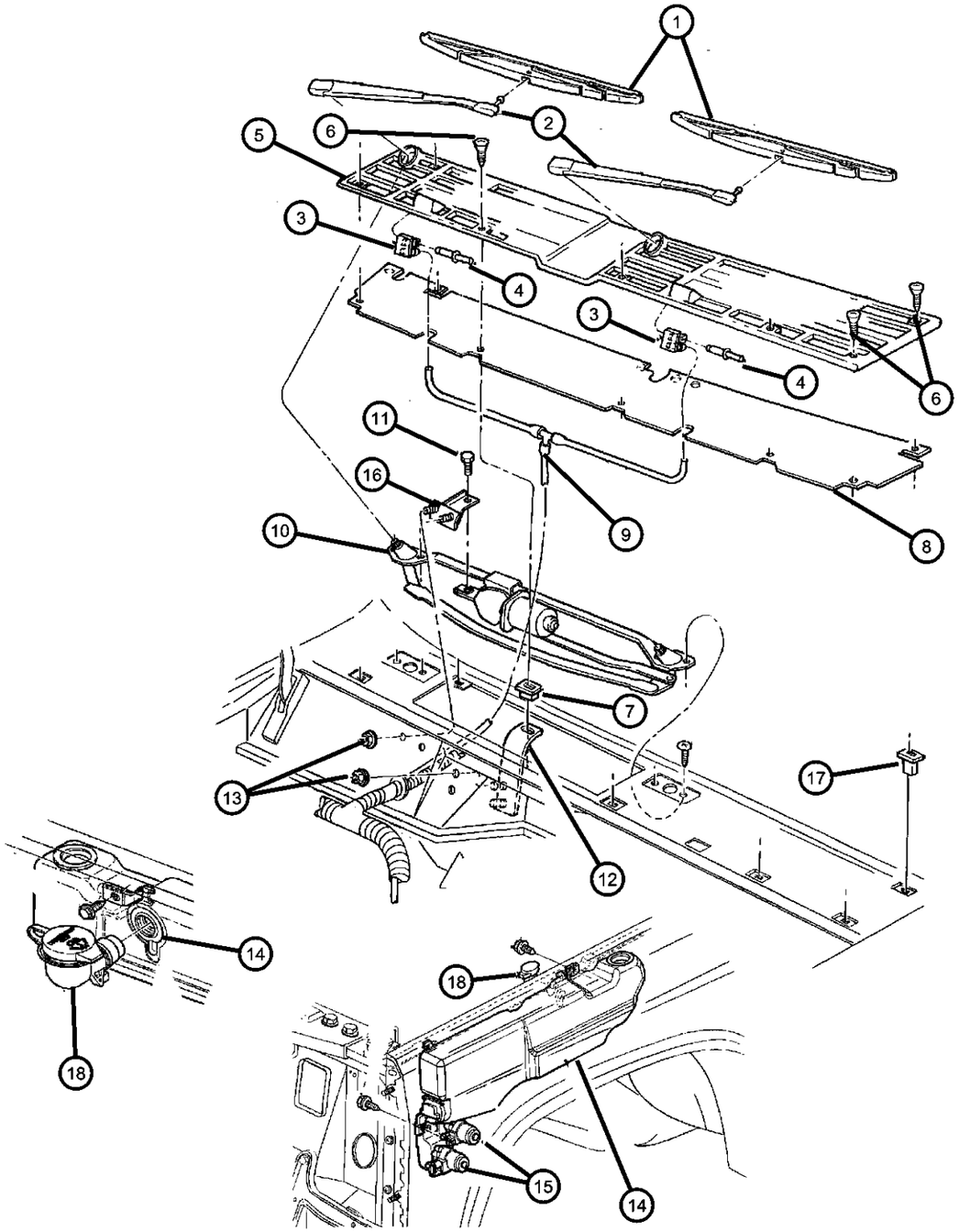

ITEM	PART NUMBER	QTY	LINE	SERIES	BODY	ENGINE	TRANS	TRIM	DESCRIPTION
1	55155652	2	B, U						BLADE, Wiper
2	55155651	2	B, U						ARM, Wiper
3	56001601	2							NOZZLE, Washer, Windshield
4	J4004262	2							PIN, Push, .15x.41
5									GRILLE, Cowl Panel
	55008832	1	J, T						
	55027696	1	B, U						
6	34201230	7							SCREW, Round Washer Head AB
7	34201872	5							NUT, Snap In, M4.2 x 1.41
8	55027697	1	B, U						SCREEN, Cowl
9	55027697	1							HOSE, Windshield Washer, 0156 ID=4MM, (NOT SERVICED)
10	55155300	1	B, U						MOTOR, Wiper
11	34201686	1							BOLT, Hex Flange Head, M12x1.18x35
12	55235371	1	B, U						BRACKET, Extension to Cowl Top
13	34201358	1							NUT AND WASHER, Hex Nut-Sealing Washer, M6 x 1.00
14									RESERVOIR, Washer
	04778344	1							w/Sensor
	04778345	1							w/o Sensor
15									PUMP, Washer, Windshield
	04778347	1							Front
	04778348	1							Rear
16	55154763	1	B, U						BRACKET, Wiper Motor
17	J4005242	5							NUT, Push
18	55154812	1							FILLER NECK AND CAP, Washer Reservoir
-19	04630249	1							CAP, Washer Reservoir
-20	04778346	1							GROMMET, Washer Reservoir, Sensor/Pump
-21	04778350	1							GROMMET, Washer Reservoir, Filler Neck
-22	55154979	1							SENSOR, Washer Fluid Level

CHEROKEE (XJ)

SERIES	LINE	BODY	ENGINE	TRANSMISSION
L = LOWLINE	T = JEEP - 2WD B = JEEP - 2WD (RHD) J = JEEP - 4WD U = JEEP - 4WD (RHD)	72 = SPORT UTILITY 2-DR 74 = SPORT UTILITY 4-DR	ENC = 2.5L 4 Cyl Turbo Diesel Engine EPB = 2.5L 4 Cylinder Engine EPE = Engine - 2.5L Power Tech I-4 Cyl. ERH = 4.0L Power Tech I-6 Engine	DDQ = 5-Speed Manual Transmission DGS = 4-Speed Automatic AW4 Transmission DGO = ALL AUTOMATIC TRANSMISSIONS DBB = ALL MANUAL TRANSMISSIONS

Rear Wiper & Washer
Figure 23D-320

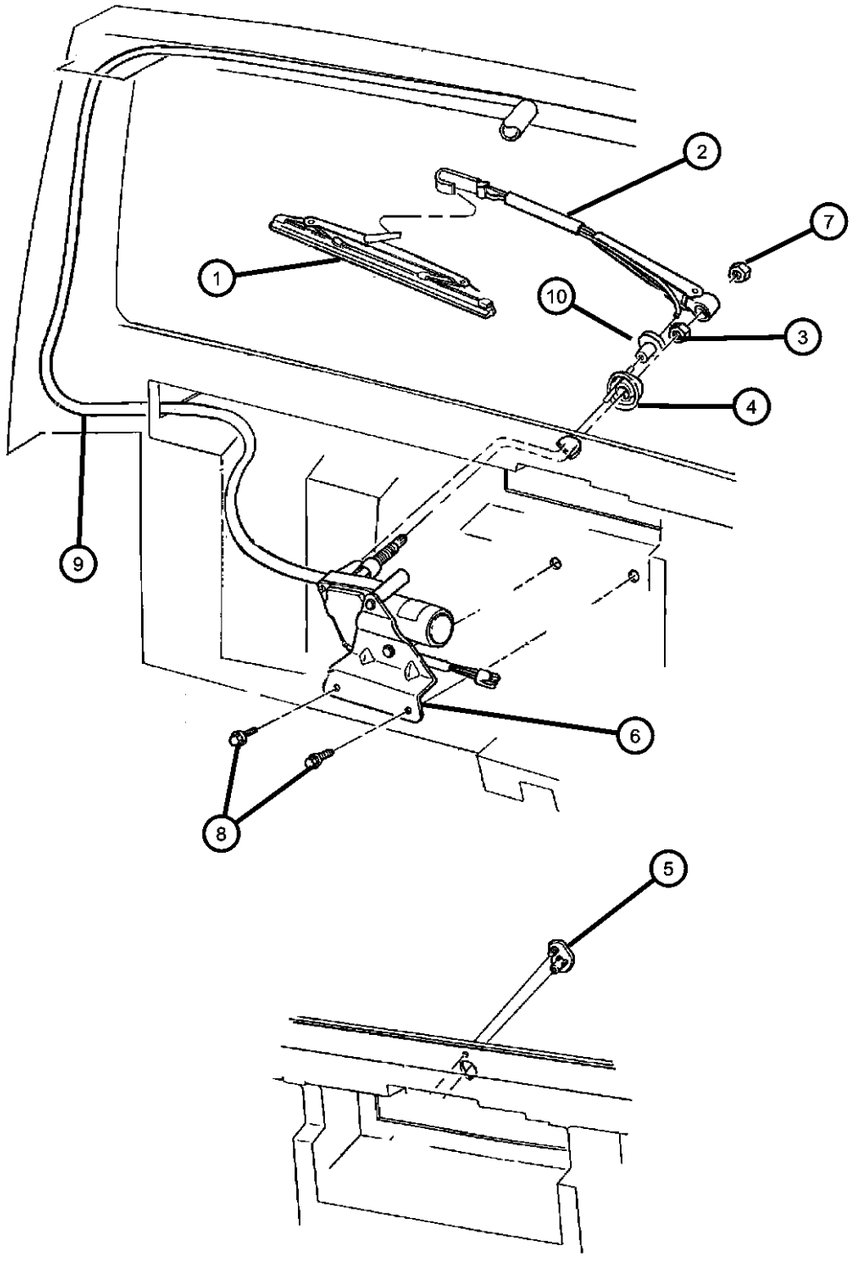

ITEM	PART NUMBER	QTY	LINE	SERIES	BODY	ENGINE	TRANS	TRIM	DESCRIPTION
1									BLADE, Wiper
	55154920	1							
	55155652	2	B, U						
2									ARM, Wiper
	55154919	1							
	55155651	2	B, U						
3	06502299	1							CAPS, M16x1.00
4	55154942	1							BEZEL, Liftgate Wiper Motor
5	55154939	1							PLUG, Liftgate
6	55154944AB	1							MOTOR, Wiper
7	06500165	1							NUT, Wiper Arm
8	06100287	2							SCREW, M6x1x25
9	55155041	1							HOSE, Windshield Washer
10	34201767	1							CLIP, Tube
-11	04778344	1							RESERVOIR, Washer

CHEROKEE (XJ)

SERIES	LINE	BODY	ENGINE	TRANSMISSION
L = LOWLINE	T = JEEP - 2WD B = JEEP - 2WD (RHD) J = JEEP - 4WD U = JEEP - 4WD (RHD)	72 = SPORT UTILITY 2-DR 74 = SPORT UTILITY 4-DR	ENC = 2.5L 4 Cyl Turbo Diesel Engine EPB = 2.5L 4 Cylinder Engine EPE = Engine - 2.5L Power Tech I-4 Cyl. ERH = 4.0L Power Tech I-6 Engine	DDQ = 5-Speed Manual Transmission DGS = 4-Speed Automatic AW4 Transmission DGO = ALL AUTOMATIC TRANSMISSIONS DBB = ALL MANUAL TRANSMISSIONS

Group - 24

Air Conditioning & Heater

024-100 Air Conditioner and Heater Units 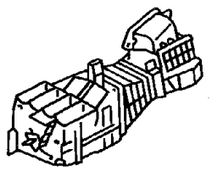	**024-200** Air Conditioner and Heater Plumbing 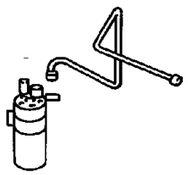	**024-300** Air Conditioner and Heater Controls 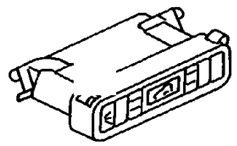	**024-400** Air Conditioning Compressor 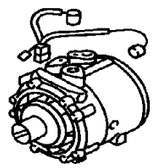
024-500 Air Conditioning Compressor Mounting 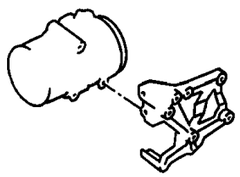	**024-600** Air Ducts and Outlets 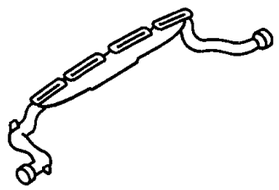		

Group - 24 Air Conditioning & Heater

Illustration Title — Group-Fig. No.

Air Conditioner and Heater Units
Hevac Unit ..... Fig. 24 - 110

Air Conditioner and Heater Plumbing
Plumbing, Heater 2.5,4.0L Gas Engines LHD ..... Fig. 24 - 210
Plumbing, Heater 2.5,4.0L Gas Engines RHD ..... Fig. 24 - 220
Plumbing, Heater 2.5L Diesel Engine LHD ..... Fig. 24 - 230
Plumbing, Heater 2.5L Diesel Engine RHD ..... Fig. 24 - 240
Plumbing, Air Conditioning 2.5,4.0L Gas Engines LHD ..... Fig. 24 - 250
Plumbing, Air Conditioning 2.5L Gas Engine RHD ..... Fig. 24 - 260
Plumbing, Air Conditioning 4.0L Engine RHD ..... Fig. 24 - 270
Plumbing, Air Conditioning 2.5L Diesel Engine LHD ..... Fig. 24 - 280
Plumbing, Air Conditioning 2.5L Diesel Engine RHD ..... Fig. 24 - 290

Air Conditioner and Heater Controls
Control, Heater and Air Conditioning ..... Fig. 24 - 310

Air Conditioning Compressor
Compressor, Air Conditiong 2.5,4.0L Gas Engines ..... Fig. 24 - 410
Compressor, Air Conditioning 2.5L Diesel Engine ..... Fig. 24 - 415

Air Conditioning Compressor Mounting
Compressor Mounting ..... Fig. 24 - 510

Air Ducts and Outlets
Air Distribution Ducts ..... Fig. 24 - 610

Hevac Unit
Figure 24-110

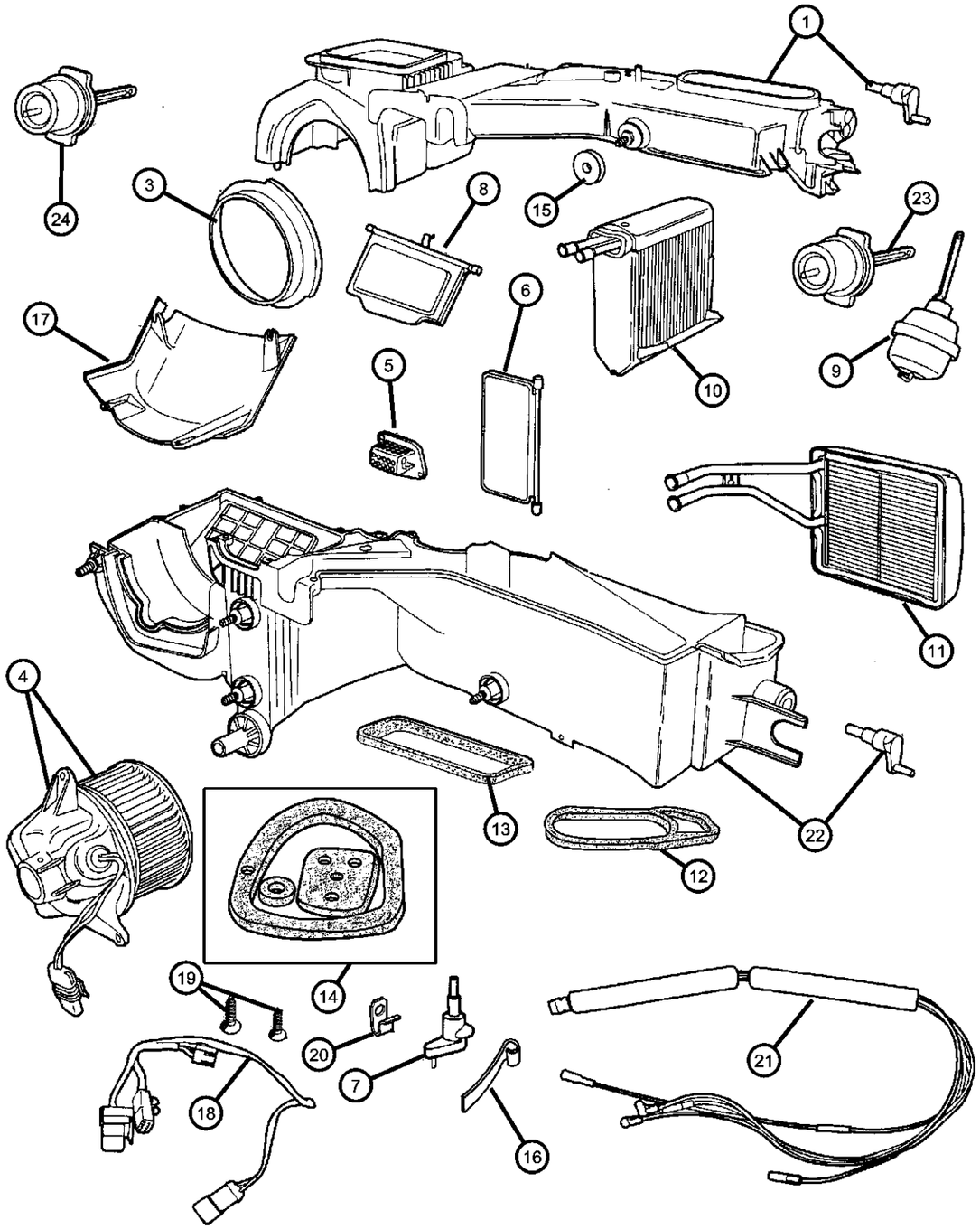

ITEM	PART NUMBER	QTY	LINE	SERIES	BODY	ENGINE	TRANS	TRIM	DESCRIPTION
1									HOUSING, A/C Upper
	04864943	1	J, T						Upper
	04864945	1	B, U						Upper
-2	04864944	1	J						HOUSING, Heater
3									RING
	04864951	1	J, T						
		1	B, U						
4									BLOWER
	04864952	1	J						
	04864956	1	B						
5									RESISTOR, Blower Motor
	04864957	1	B						
		1	J						
6									DOOR, Blend Air
	04897610AA	1	J						
	04897611AA	1	B, U						
7									LEVER, Blend Air Door
	04864989	1	J, T						
	04864991	1	B						
8									DOOR, Fresh Air
	04864992	1	J						
	04864993	1	B						
9									ACTUATOR, Vacuum
	04864994	1	J						Defroster
		1	B						Defroster
10									EVAPORATOR KIT, A/C
	04864999	1	J, T						
	04874044	1	B, U						
11									CORE, Heater
	04874045	1	J						
	04874046	1	B						
12									SEAL, Demister
	04874063	1	J						

CHEROKEE (XJ)

SERIES	LINE	BODY	ENGINE	TRANSMISSION
L = LOWLINE	T = JEEP - 2WD B = JEEP - 2WD (RHD) J = JEEP - 4WD U = JEEP - 4WD (RHD)	72 = SPORT UTILITY 2-DR 74 = SPORT UTILITY 4-DR	ENC = 2.5L 4 Cyl Turbo Diesel Engine EPB = 2.5L 4 Cylinder Engine EPE = Engine - 2.5L Power Tech I-4 Cyl. ERH = 4.0L Power Tech I-6 Engine	DDQ = 5-Speed Manual Transmission DGS = 4-Speed Automatic AW4 Transmission DGO = ALL AUTOMATIC TRANSMISSIONS DBB = ALL MANUAL TRANSMISSIONS

Hevac Unit
Figure 24-110

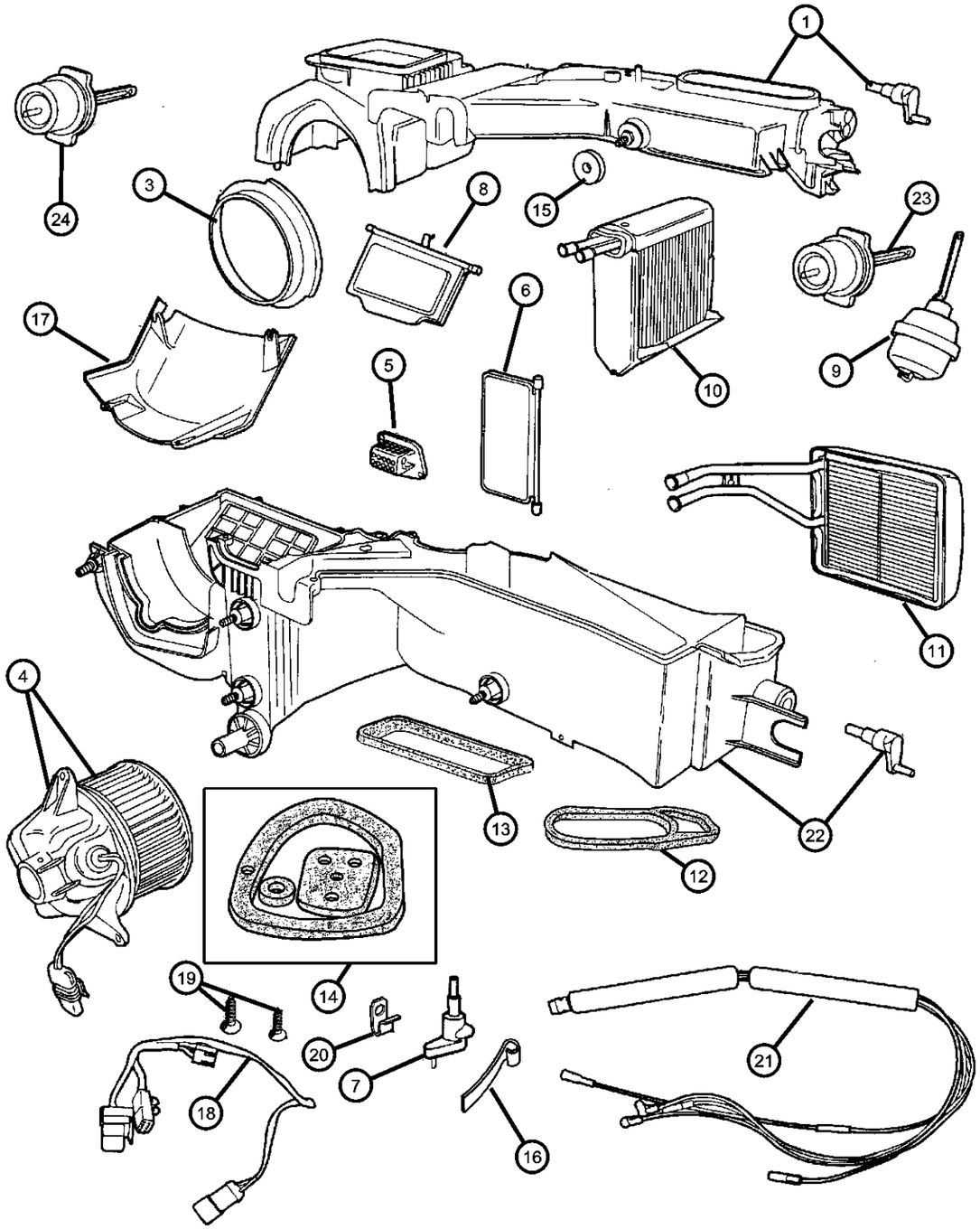

ITEM	PART NUMBER	QTY	LINE	SERIES	BODY	ENGINE	TRANS	TRIM	DESCRIPTION
	04874065	1	B						
13									SEAL, Vent
	04874068	1	J						
		1	B						
14									SEAL KIT, A/C And Heater Unit
	04874069AB	1	J, T						with Air Conditioning
	04874070AB	1	B						with Air Conditioning
	04874071AB	1	J, T						without Air Conditioning
	04874072AB	1	B						without Air Conditioning
15									WASHER, Sealing
	06031087	5	J						
		5	B						
16									SPRING, A/C Heater Mode Door
	04874077	1	J						
		1	B						
17									COVER, Recirculating Valve
	04874078	1	J, T						
	04874079	1	B, U						
18									WIRING, Air Conditioning Module
	04886085AA	1	J, T						
		1	B, U						
19									SCREW, Hex Head, M4.8-1.59x19
	04734227	15	B						
		15	J						
20									CLIP, A/C Heater Housing
	04644388	4	B						
		4	J						
21									HARNESS, Heater Vacuum
	04883888AA	1	J, T						
		1	B, U						
22									HOUSING, A/C Lower
	04864947	1	J						Lower
	04864949	1	B						Lower

CHEROKEE (XJ)

SERIES	LINE	BODY	ENGINE	TRANSMISSION
L = LOWLINE	T = JEEP - 2WD B = JEEP - 2WD (RHD) J = JEEP - 4WD U = JEEP - 4WD (RHD)	72 = SPORT UTILITY 2-DR 74 = SPORT UTILITY 4-DR	ENC = 2.5L 4 Cyl Turbo Diesel Engine EPB = 2.5L 4 Cylinder Engine EPE = Engine - 2.5L Power Tech I-4 Cyl. ERH = 4.0L Power Tech I-6 Engine	DDQ = 5-Speed Manual Transmission DGS = 4-Speed Automatic AW4 Transmission DGO = ALL AUTOMATIC TRANSMISSIONS DBB = ALL MANUAL TRANSMISSIONS

Hevac Unit
Figure 24-110

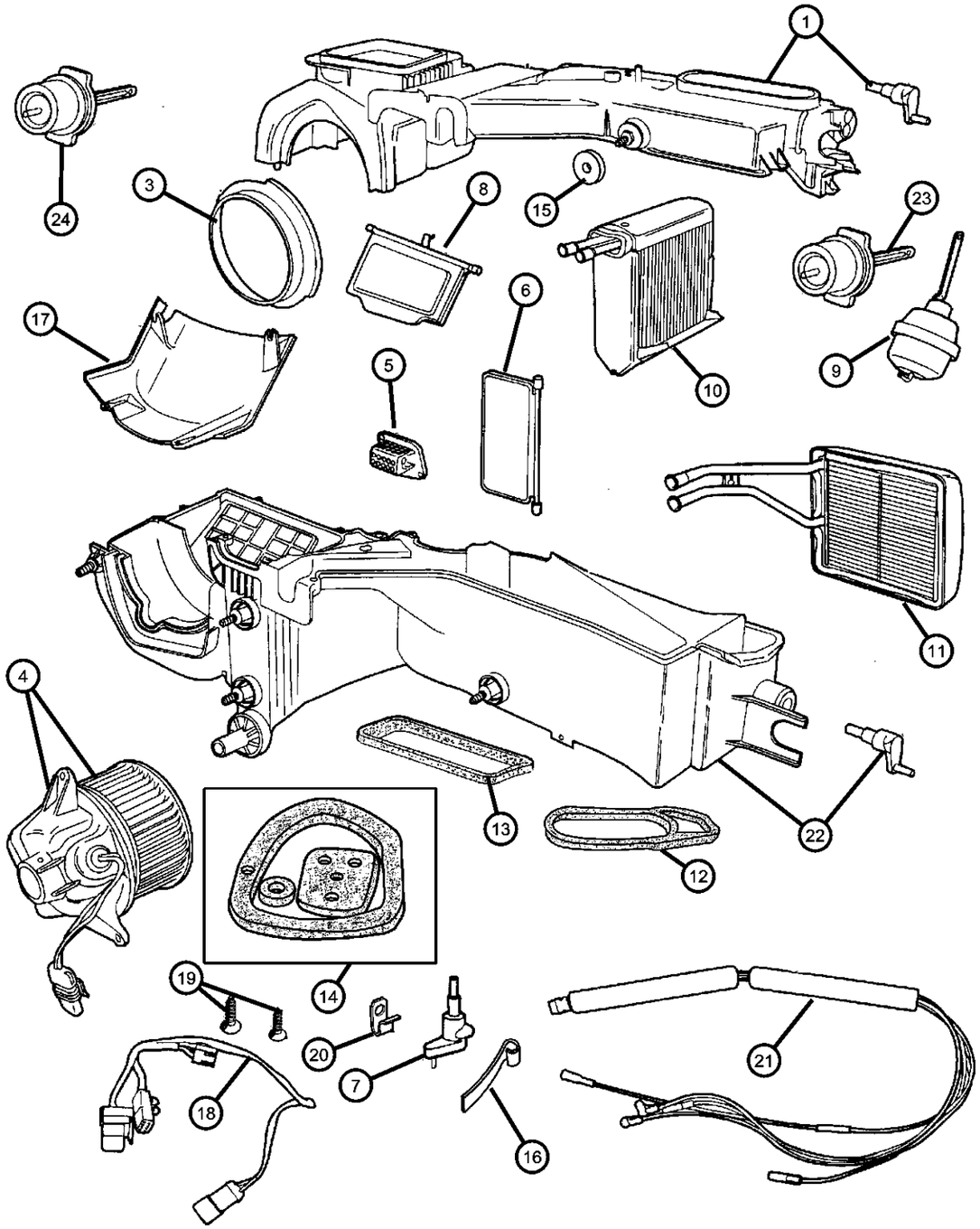

ITEM	PART NUMBER	QTY	LINE	SERIES	BODY	ENGINE	TRANS	TRIM	DESCRIPTION
23									ACTUATOR, Vacuum
	04864995	1	B						
		1	J						
24									ACTUATOR, Vacuum
	04864996	1	J						
		1	B						

CHEROKEE (XJ)

SERIES	LINE	BODY	ENGINE	TRANSMISSION
L = LOWLINE	T = JEEP - 2WD B = JEEP - 2WD (RHD) J = JEEP - 4WD U = JEEP - 4WD (RHD)	72 = SPORT UTILITY 2-DR 74 = SPORT UTILITY 4-DR	ENC = 2.5L 4 Cyl Turbo Diesel Engine EPB = 2.5L 4 Cylinder Engine EPE = Engine - 2.5L Power Tech I-4 Cyl. ERH = 4.0L Power Tech I-6 Engine	DDQ = 5-Speed Manual Transmission DGS = 4-Speed Automatic AW4 Transmission DGO = ALL AUTOMATIC TRANSMISSIONS DBB = ALL MANUAL TRANSMISSIONS

Plumbing, Heater 2.5,4.0L Gas Engines LHD
Figure 24-210

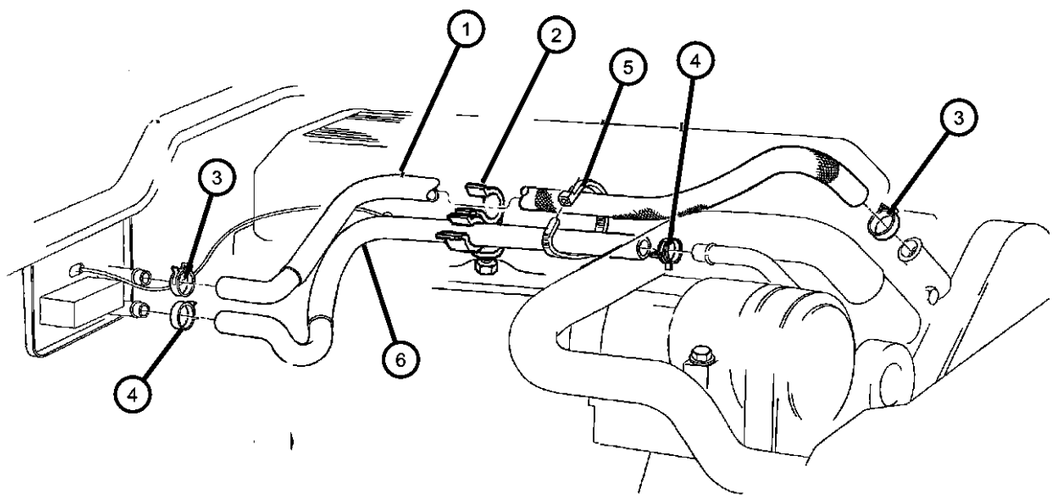

ITEM	PART NUMBER	QTY	LINE	SERIES	BODY	ENGINE	TRANS	TRIM	DESCRIPTION
Note: Sales Code EP0 = 2.5L Gas Engine									
Note: Sales Code ER0 = 4.0L Engine									
1									HOSE, Heater Supply
	55036925	1	J, T			EP0			2.5L Engine
	55037326	1	J, T			ER0			4.0L Engine
2	55035933AB	1	J, T			EP0, ER0			BRACKET, Hose
3	06502018	1				EN0			CLAMP, Hose, M28.9 x 1.60
4	06502017	1	J			EN0			CLAMP, Heater Hose
5	04641780	1				EP0, ER0			STRAP, Tie
6									HOSE, Heater Return
	55036924AB	1	J, T			ER0			
	55036926	1	J, T			EP0			

CHEROKEE (XJ)

SERIES	LINE	BODY	ENGINE	TRANSMISSION
L = LOWLINE	T = JEEP - 2WD B = JEEP - 2WD (RHD) J = JEEP - 4WD U = JEEP - 4WD (RHD)	72 = SPORT UTILITY 2-DR 74 = SPORT UTILITY 4-DR	ENC = 2.5L 4 Cyl Turbo Diesel Engine EPB = 2.5L 4 Cylinder Engine EPE = Engine - 2.5L Power Tech I-4 Cyl. ERH = 4.0L Power Tech I-6 Engine	DDQ = 5-Speed Manual Transmission DGS = 4-Speed Automatic AW4 Transmission DGO = ALL AUTOMATIC TRANSMISSIONS DBB = ALL MANUAL TRANSMISSIONS

Plumbing, Heater 2.5,4.0L Gas Engines RHD
Figure 24-220

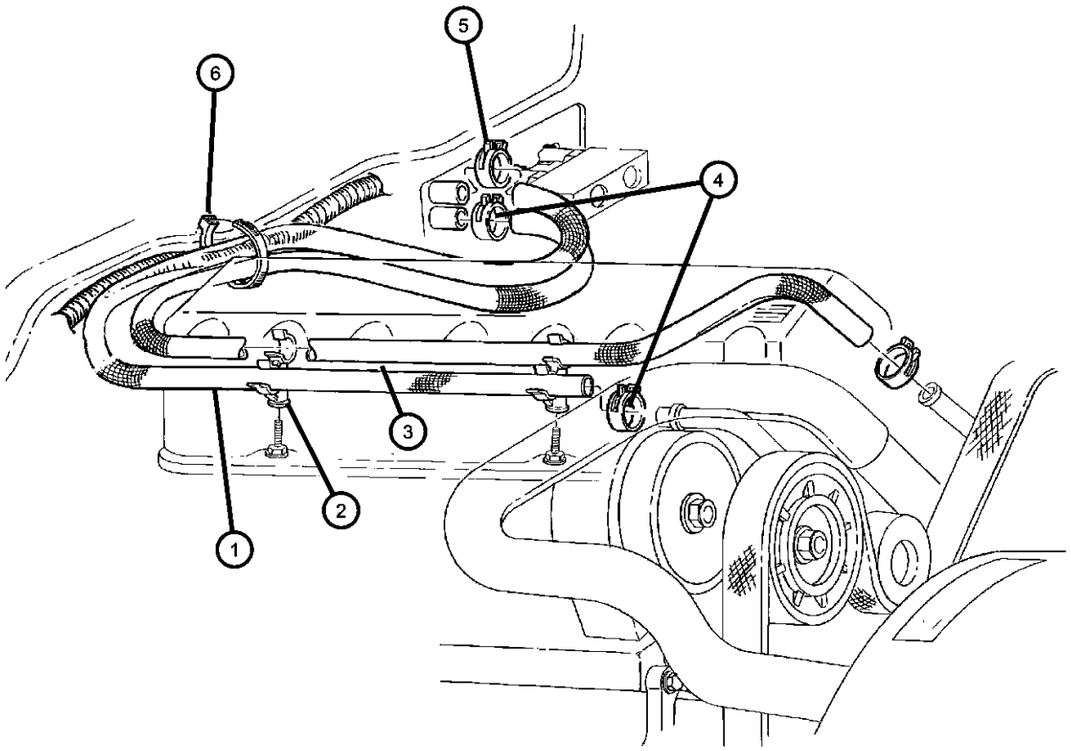

ITEM	PART NUMBER	QTY	LINE	SERIES	BODY	ENGINE	TRANS	TRIM	DESCRIPTION
Note: Sales Code EP0 = 2.5L Gas Engine									
Note: Sales Code ER0 = 4.0L Engine									
1									HOSE, Heater Return
	55037333	1	B, U			ER0			4.0L Engine
	55037334	1	B, U			EP0			2.5L Engine
2	55035933AB	2	B, U			EP0, ER0			BRACKET, Hose
3									HOSE, Heater Supply
	55037268	1	B, U			EP0			4.0L Engine
	55037269	1	B, U			ER0			2.5L Engine
4	06502017	1	B			EN0			CLAMP, Heater Hose
5	06502018	1				EN0			CLAMP, Hose, M28.9 x 1.60
6	06015756	2	B, U						STRAP, Tie

CHEROKEE (XJ)

SERIES	LINE	BODY	ENGINE	TRANSMISSION
L = LOWLINE	T = JEEP - 2WD B = JEEP - 2WD (RHD) J = JEEP - 4WD U = JEEP - 4WD (RHD)	72 = SPORT UTILITY 2-DR 74 = SPORT UTILITY 4-DR	ENC = 2.5L 4 Cyl Turbo Diesel Engine EPB = 2.5L 4 Cylinder Engine EPE = Engine - 2.5L Power Tech I-4 Cyl. ERH = 4.0L Power Tech I-6 Engine	DDQ = 5-Speed Manual Transmission DGS = 4-Speed Automatic AW4 Transmission DGO = ALL AUTOMATIC TRANSMISSIONS DBB = ALL MANUAL TRANSMISSIONS

Plumbing, Heater 2.5L Diesel Engine LHD
Figure 24-230

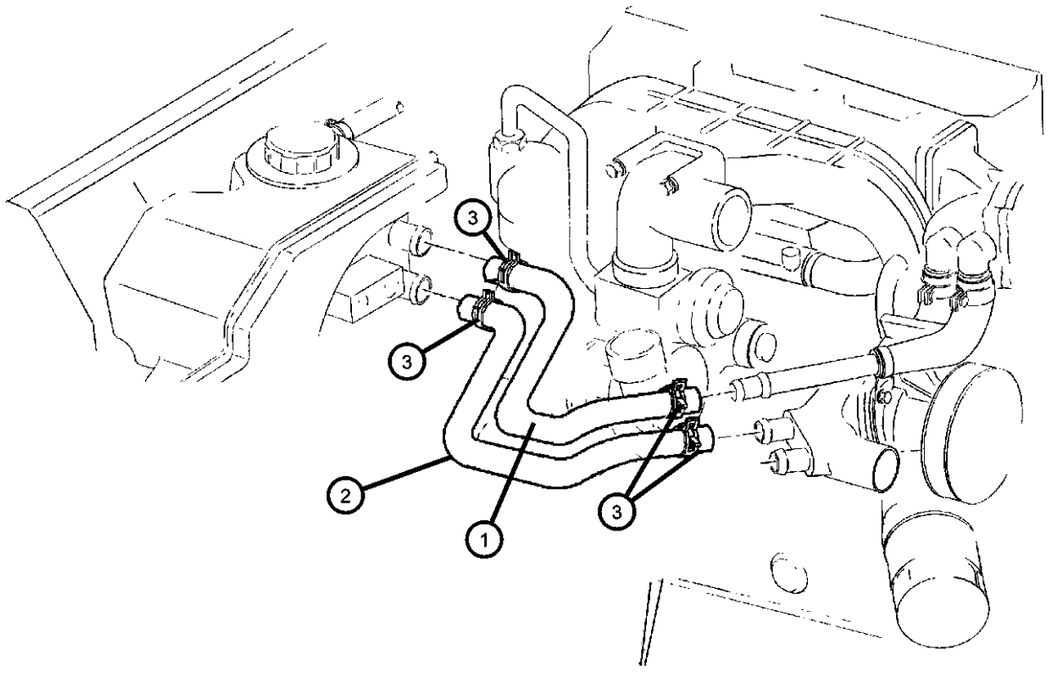

ITEM	PART NUMBER	QTY	LINE	SERIES	BODY	ENGINE	TRANS	TRIM	DESCRIPTION
Note: Sales Code EN0 = 2.5L Diesel Engine									
1	55037301	1	J, T			EN0			HOSE, Heater Supply
2	55037319	1	J, T			EN0			HOSE, Heater Return
3	06502017	1	J			EN0			CLAMP, Heater Hose

CHEROKEE (XJ)

SERIES	LINE	BODY	ENGINE	TRANSMISSION
L = LOWLINE	T = JEEP - 2WD B = JEEP - 2WD (RHD) J = JEEP - 4WD U = JEEP - 4WD (RHD)	72 = SPORT UTILITY 2-DR 74 = SPORT UTILITY 4-DR	ENC = 2.5L 4 Cyl Turbo Diesel Engine EPB = 2.5L 4 Cylinder Engine EPE = Engine - 2.5L Power Tech I-4 Cyl. ERH = 4.0L Power Tech I-6 Engine	DDQ = 5-Speed Manual Transmission DGS = 4-Speed Automatic AW4 Transmission DGO = ALL AUTOMATIC TRANSMISSIONS DBB = ALL MANUAL TRANSMISSIONS

Plumbing, Heater 2.5L Diesel Engine RHD
Figure 24-240

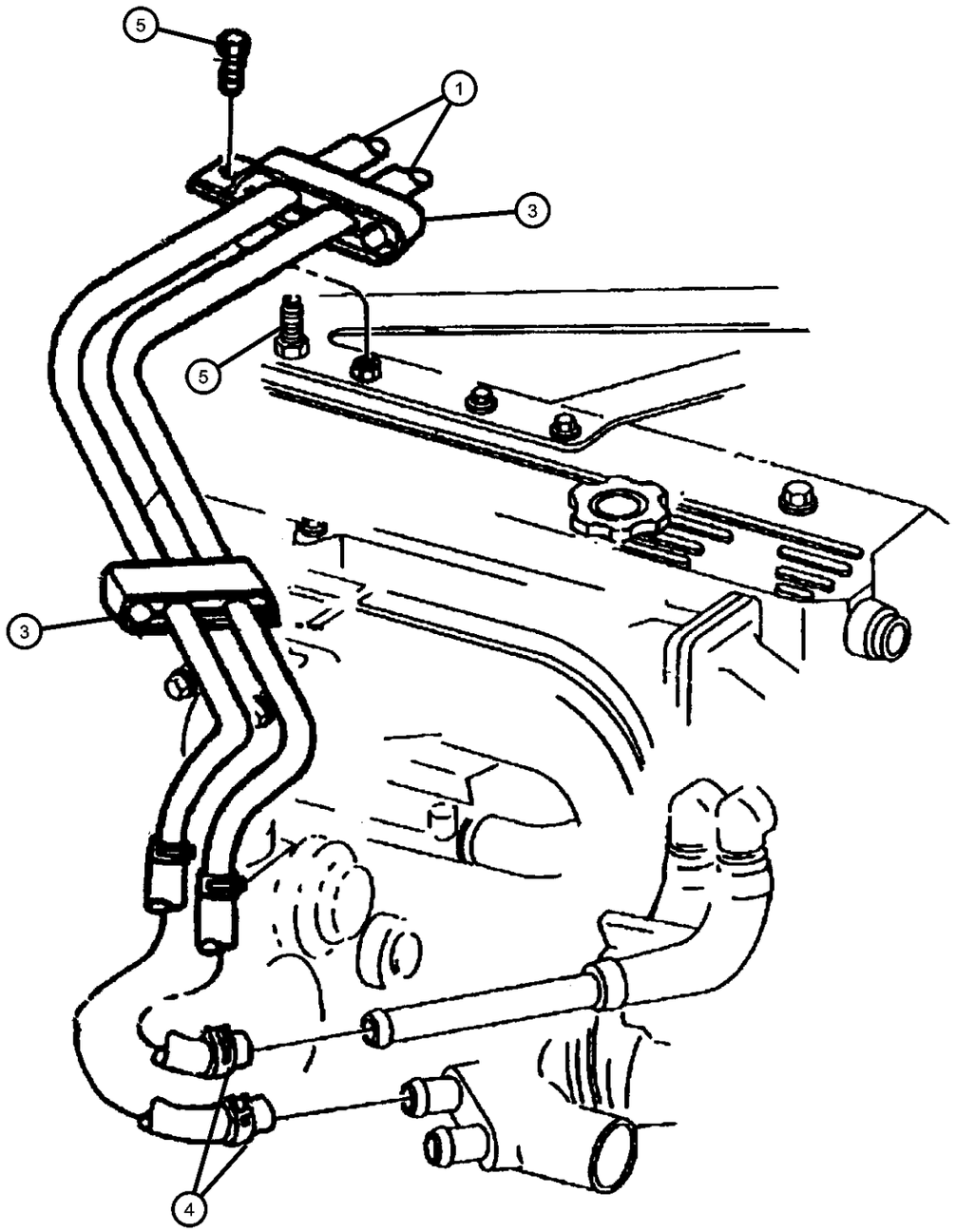

ITEM	PART NUMBER	QTY	LINE	SERIES	BODY	ENGINE	TRANS	TRIM	DESCRIPTION
Note: Sales Code EN0 = 2.5L Diesel Engine									
1	55037276	1	B, U			EN0			HOSE, Heater Return
-2	55037277	1	B, U			EN0			HOSE, Heater Supply
3	55036832	2	B, U			EN0			CLIP, Heater Hose
4	06502017	1	B			EN0			CLAMP, Heater Hose
5	06502017	1							SCREW, (NOT SERVICED)

CHEROKEE (XJ)

SERIES	LINE	BODY	ENGINE	TRANSMISSION
L = LOWLINE	T = JEEP - 2WD B = JEEP - 2WD (RHD) J = JEEP - 4WD U = JEEP - 4WD (RHD)	72 = SPORT UTILITY 2-DR 74 = SPORT UTILITY 4-DR	ENC = 2.5L 4 Cyl Turbo Diesel Engine EPB = 2.5L 4 Cylinder Engine EPE = Engine - 2.5L Power Tech I-4 Cyl. ERH = 4.0L Power Tech I-6 Engine	DDQ = 5-Speed Manual Transmission DGS = 4-Speed Automatic AW4 Transmission DGO = ALL AUTOMATIC TRANSMISSIONS DBB = ALL MANUAL TRANSMISSIONS

Plumbing, Air Conditioning 2.5,4.0L Gas Engines LHD
Figure 24-250

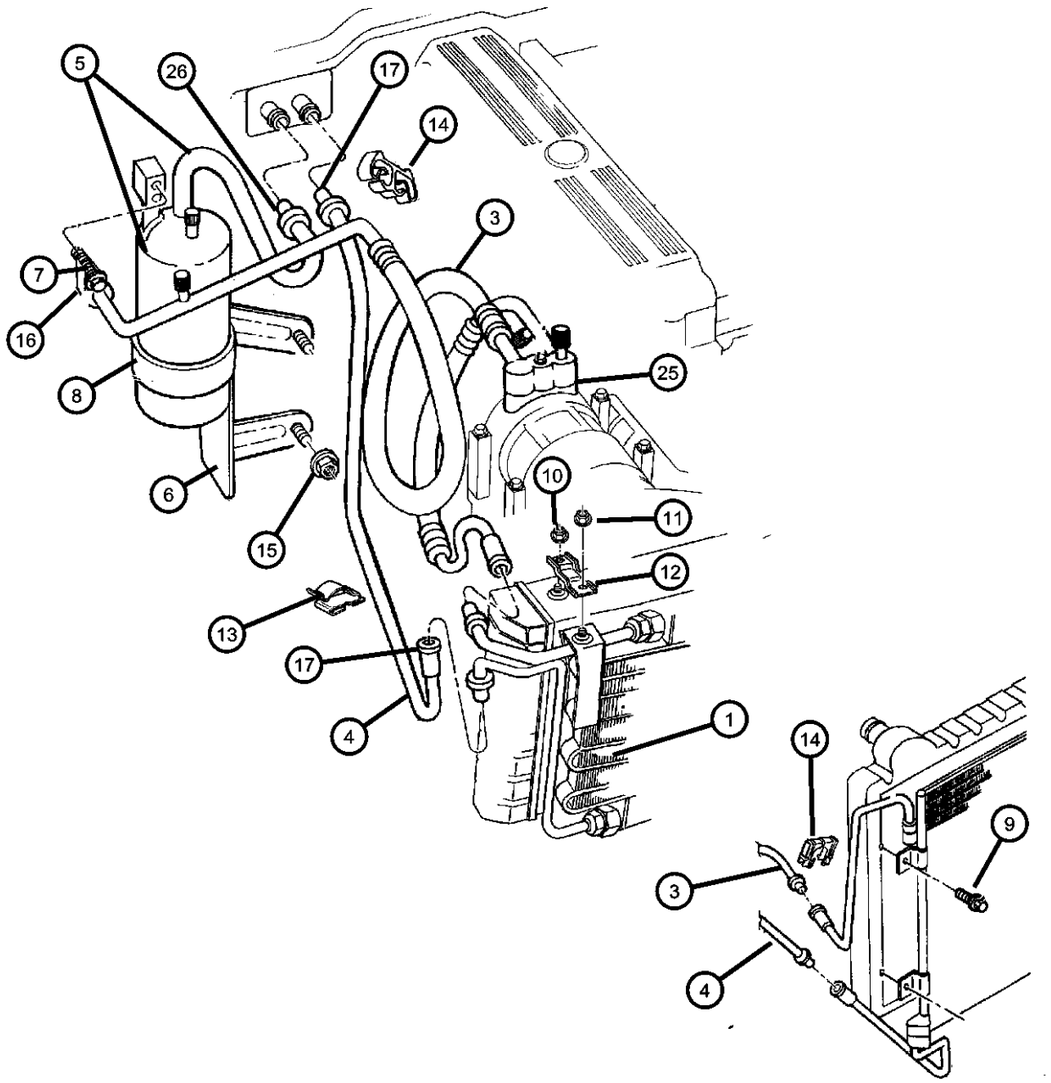

ITEM	PART NUMBER	QTY	LINE	SERIES	BODY	ENGINE	TRANS	TRIM	DESCRIPTION
Note: Sales Code EP0 = 2.5L Gas Engine									
Note: Sales Code ER0 = 4.0L Engine									
1									CONDENSER, A/C
	55036595AD	1	J, T			ER0			
	55037434AA	1	B, U			ER0			
-2	55036604	1				EP0			CONDENSER, Air Conditioning
3									LINE, A/C Suction & Discharge
	55036634AB	1	J, T			EP0			
	55036635AB	1	J, T			ER0			
4									LINE, A/C Liquid
	55036632	1	J, T			EP0, ER0			
	55037147AB	1	J, T			EP0			Jumper Tube
	55037824AB	1	J, T			EP0			Evap In
5	55036630	1	J, T			EP0, ER0			ACCUMULATOR, Suction Line
6	55036619	1	J, T						BRACKET, Accumulator
7	11502628	3				EP0			BOLT, Hex Flange Head, M8x1.25x30
8	55036206	1	J, T						BAND, Accumulator Retaining
9	06100584	4				EP0			BOLT AND CONED WASHER, Hex Head, M8x30x20
10	11502722	3	J, T			EP0			NUT, Hex Flange, M5x.8
11	06100814	2				EN0, EP0			NUT, Hex, M6
12	56002231	2				ER0			BRACKET, Radiator to Condenser
13	55037289	1				ER0			CLIP, A/C Liquid Line
14									CLIP, A/C Quick Disconnect
	04596152	3				EN0			Suction Liquid Line
		3	J, T			ER0			Discharge Line
15	06032988	2				EP0, ER0			SCREW
16									O RING, A/C Suction Line
	04740401	1	J, T			EP0, ER0			5/8‘ Green
		1	B, U						5/8‘ Green
17									O RING, A/C Liquid Line
	04741705	1	J, T			EP0, ER0			1/2‘ Green
		1	B, U			EP0			1/2‘ Green

CHEROKEE (XJ)

SERIES	LINE	BODY	ENGINE	TRANSMISSION
L = LOWLINE	T = JEEP - 2WD B = JEEP - 2WD (RHD) J = JEEP - 4WD U = JEEP - 4WD (RHD)	72 = SPORT UTILITY 2-DR 74 = SPORT UTILITY 4-DR	ENC = 2.5L 4 Cyl Turbo Diesel Engine EPB = 2.5L 4 Cylinder Engine EPE = Engine - 2.5L Power Tech I-4 Cyl. ERH = 4.0L Power Tech I-6 Engine	DDQ = 5-Speed Manual Transmission DGS = 4-Speed Automatic AW4 Transmission DGO = ALL AUTOMATIC TRANSMISSIONS DBB = ALL MANUAL TRANSMISSIONS

Plumbing, Air Conditioning 2.5,4.0L Gas Engines LHD
Figure 24-250

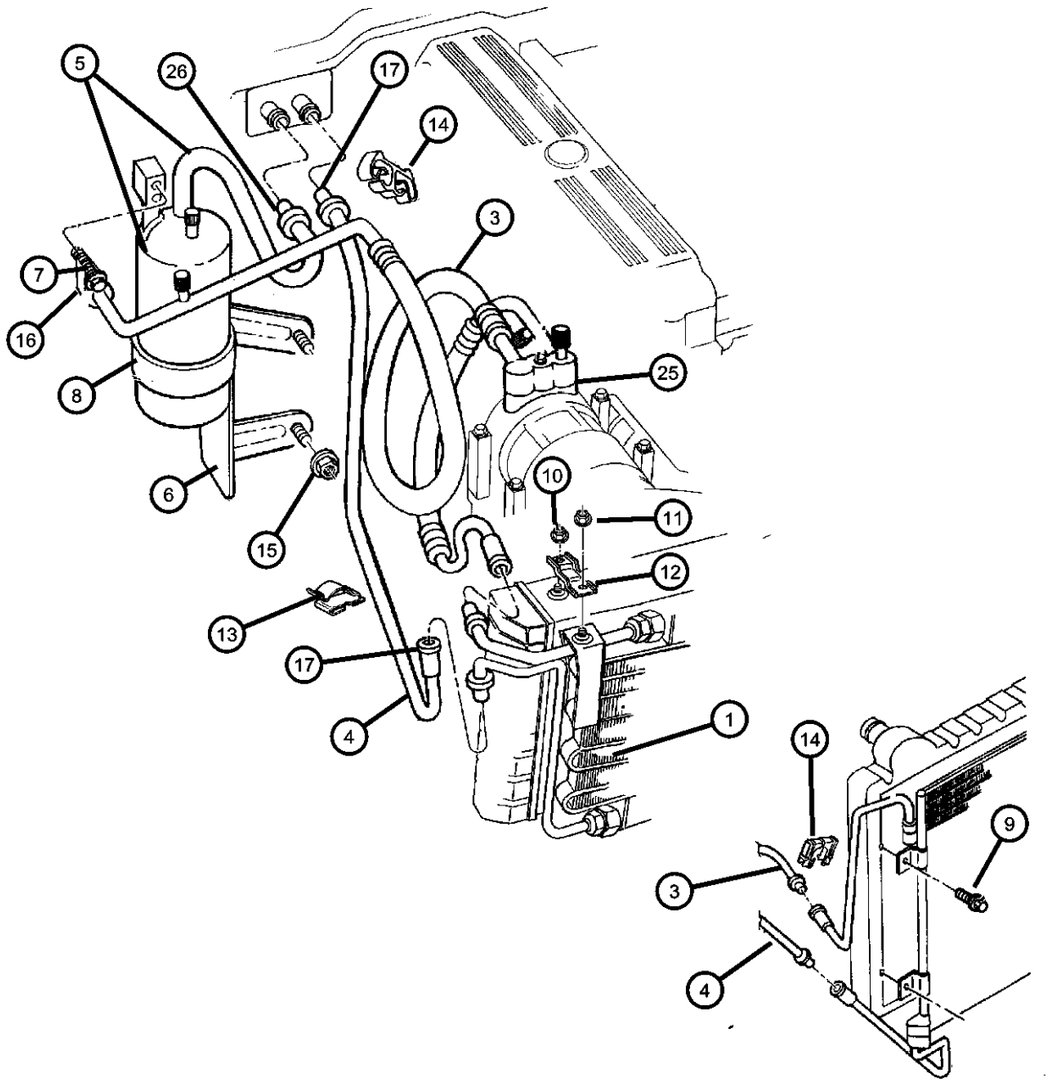

ITEM	PART NUMBER	QTY	LINE	SERIES	BODY	ENGINE	TRANS	TRIM	DESCRIPTION
-18									SWITCH, A/C High Pressure Cut Off
	04773190	1	B, U			ER0			
		1	J, T			EP0			
		1	B, U			EP0			
-19									VALVE, A/C Discharge Line Check
	04882334	1	B, U			ER0			
		1	J, T			EP0			
		1	J, T			ER0			
		1	B, U			EP0			
-20									CAP, A/C Check Valve
	05264642	1	B, U			ER0			
		1	J, T			ER0			
		1	J, T			EP0			
		1	B, U			EP0			
-21									VALVE CORE, Service Port
	04762788	1	B, U			ER0			
		1	J, T			ER0			
		1	J, T			EP0			
		1	B, U			EP0			
-22									SPRING, Quick Disconnect
	04728856	1	B, U			EP0			
		1	B, U			ER0			
		1	J, T			EP0, ER0			
-23									SWITCH, A/C Cycling
	04856849	1	J, T			EP0, ER0			
		1	B, U						
-24	55036182	1	J, T			EP0, ER0			ORIFICE, Liquid Line
25									O RING, A/C Suction Line
	04761737	1	J, T			EP0			Stat-o-seal
		1	J, T			ER0			Stat-o-seal
26	04741716	1	J, T			EP0, ER0			O RING, A/C Discharge Line, Green

CHEROKEE (XJ)

SERIES	LINE	BODY	ENGINE	TRANSMISSION
L = LOWLINE	T = JEEP - 2WD B = JEEP - 2WD (RHD) J = JEEP - 4WD U = JEEP - 4WD (RHD)	72 = SPORT UTILITY 2-DR 74 = SPORT UTILITY 4-DR	ENC = 2.5L 4 Cyl Turbo Diesel Engine EPB = 2.5L 4 Cylinder Engine EPE = Engine - 2.5L Power Tech I-4 Cyl. ERH = 4.0L Power Tech I-6 Engine	DDQ = 5-Speed Manual Transmission DGS = 4-Speed Automatic AW4 Transmission DGO = ALL AUTOMATIC TRANSMISSIONS DBB = ALL MANUAL TRANSMISSIONS

Plumbing, Air Conditioning 2.5L Gas Engine RHD
Figure 24-260

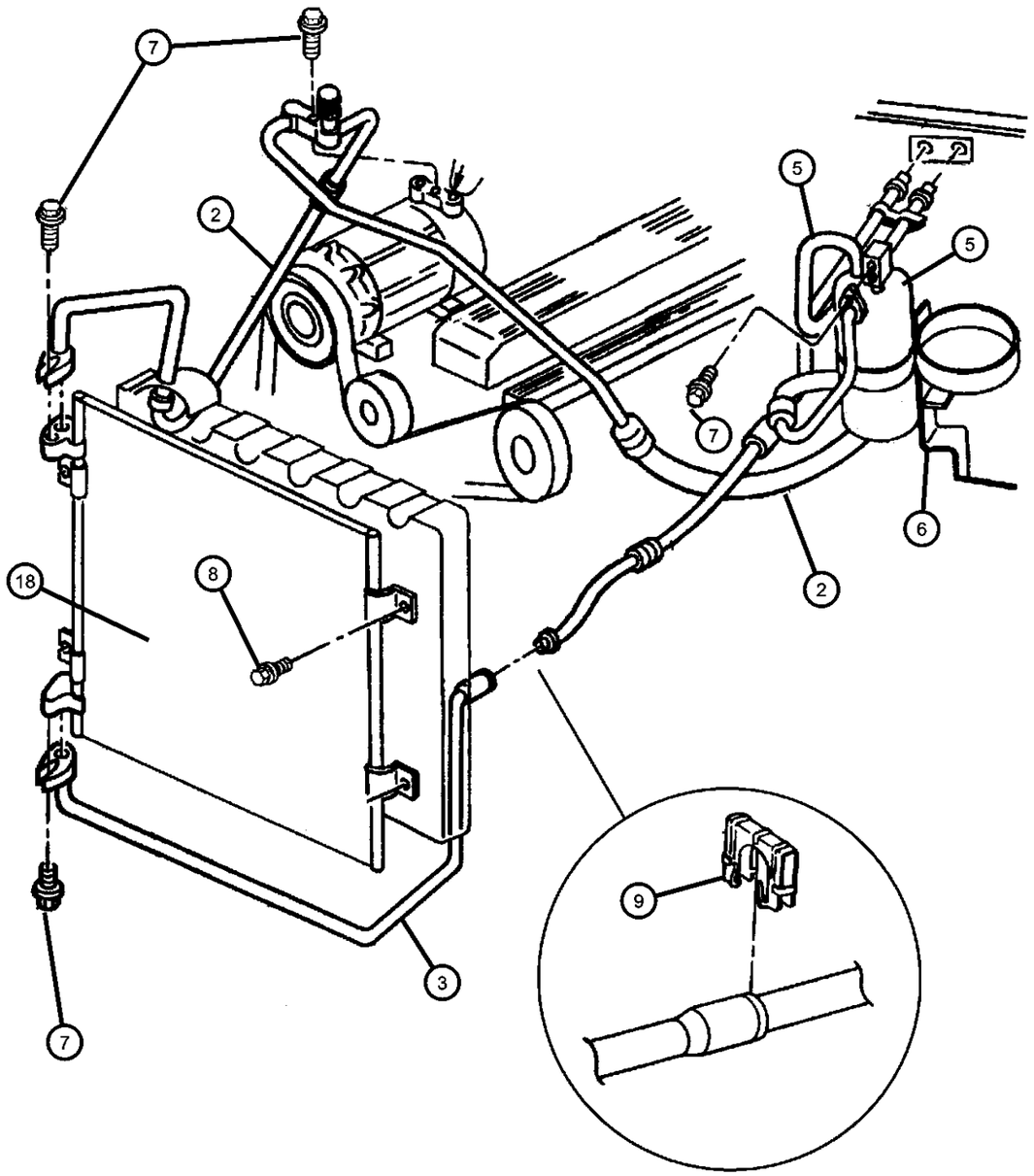

ITEM	PART NUMBER	QTY	LINE	SERIES	BODY	ENGINE	TRANS	TRIM	DESCRIPTION
Note: Sales Code EP0 = 2.5L Gas Engine									
-1	55036232	1				EP0			HOSE, A/C Discharge
2	55036637	1	B, U			EP0			LINE, A/C Suction & Discharge
3	55037367	1	B, U			EP0			LINE, A/C Liquid
-4	55037220	1	B, U			EP0			BRACKET, A/C Line
5	55036649	1	B, U						ACCUMULATOR, Suction Line
6	55036620	1	B, U						BRACKET, Accumulator
7	11502628	3				EP0			BOLT, Hex Flange Head, M8x1.25x30
8	06100584	4				EP0			BOLT AND CONED WASHER, Hex Head, M8x30x20
9									CLIP, A/C Quick Disconnect
	04596152	3				EN0			Discharge Line
	04596153	1							Suction Liquid Line
-10	04773190	1	B, U			EP0			SWITCH, A/C High Pressure Cut Off
-11	04761737	1	B, U			EP0			O RING, A/C Suction Line
-12	04882334	1	B, U			ER0			VALVE, A/C Discharge Line Check
-13	05264642	1	B, U			ER0			CAP, A/C Check Valve
-14	04740401	1	J			EP0, ER0			O RING, A/C Suction Line
-15	04762788	1	J			EN0			VALVE CORE, Service Port
-16	04728856	1	B			ER0			SPRING, Quick Disconnect
-17	04741705	1	J, T			EP0, ER0			O RING, A/C Liquid Line
18	55036595AD	1	J, T			ER0			CONDENSER, A/C

CHEROKEE (XJ)

SERIES	LINE	BODY	ENGINE	TRANSMISSION
L = LOWLINE	T = JEEP - 2WD B = JEEP - 2WD (RHD) J = JEEP - 4WD U = JEEP - 4WD (RHD)	72 = SPORT UTILITY 2-DR 74 = SPORT UTILITY 4-DR	ENC = 2.5L 4 Cyl Turbo Diesel Engine EPB = 2.5L 4 Cylinder Engine EPE = Engine - 2.5L Power Tech I-4 Cyl. ERH = 4.0L Power Tech I-6 Engine	DDQ = 5-Speed Manual Transmission DGS = 4-Speed Automatic AW4 Transmission DGO = ALL AUTOMATIC TRANSMISSIONS DBB = ALL MANUAL TRANSMISSIONS

Plumbing, Air Conditioning 4.0L Engine RHD
Figure 24-270

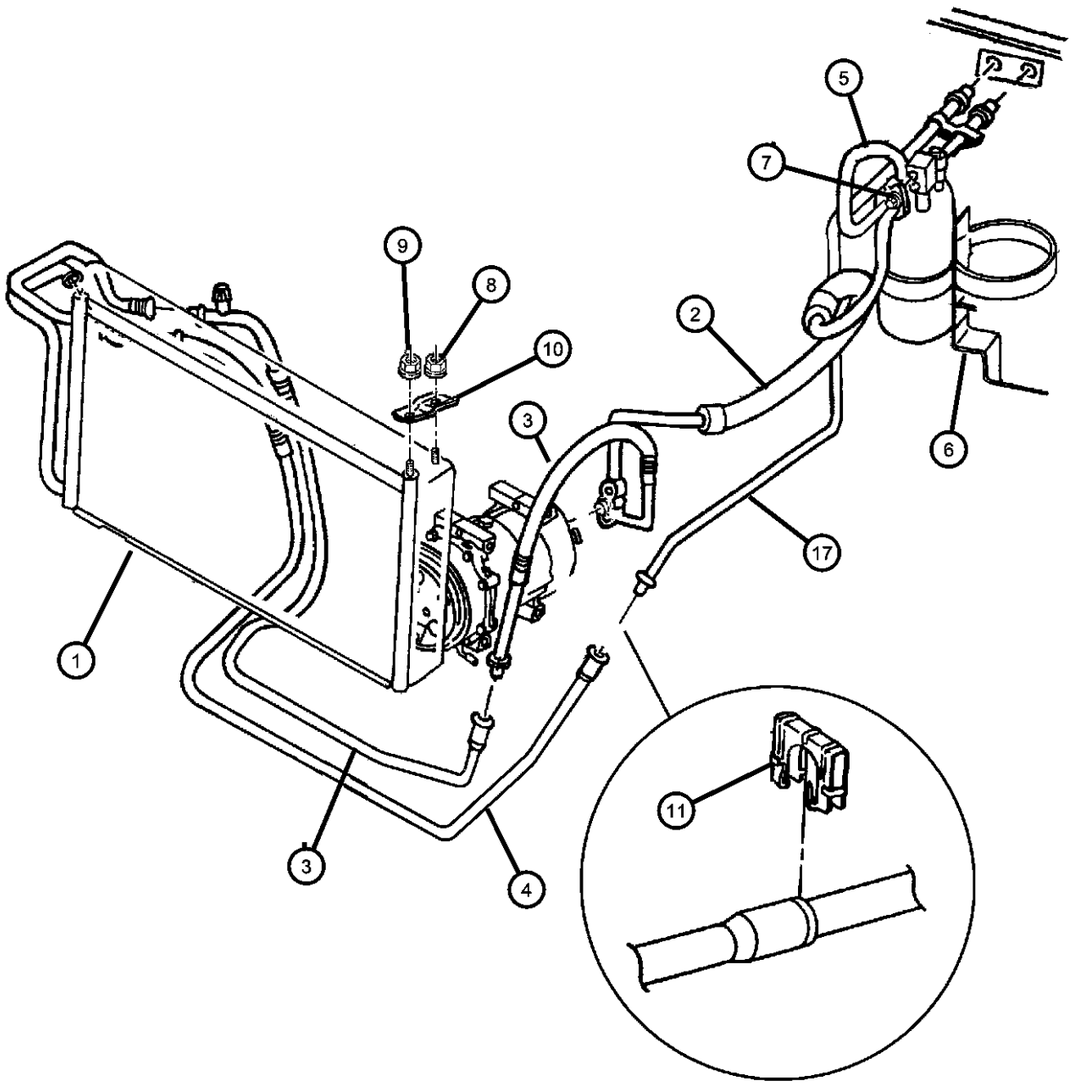

ITEM	PART NUMBER	QTY	LINE	SERIES	BODY	ENGINE	TRANS	TRIM	DESCRIPTION
Note: Sales Code ER0 = 4.0L Engine									
1	55037434AA	1	B, U			ER0			CONDENSER, A/C
2	55036638	1	B, U			ER0			LINE, A/C Suction & Discharge
3	55037446AB	1	B, U			ER0			LINE, A/C Discharge
4	55036633	1	B, U			ER0			LINE, A/C Liquid
5	55036649	1	B, U						ACCUMULATOR, Suction Line
6	55036620	1	B, U						BRACKET, Accumulator
7	11502628	1							BOLT, Hex Flange Head, M8x1.25x30
8	11502722	4				EN0, ER0			NUT, Hex Flange, M5x.8
9	06100814	2				EN0, EP0			NUT, Hex, M6
10	56002231	2				ER0			BRACKET, Radiator to Condenser
11									CLIP, A/C Quick Disconnect
	04596152	4	B, U			ER0			Discharge Line
	04596153	1							Suction Liquid Line
-12	04773190	1	B, U			ER0			SWITCH, A/C High Pressure Cut Off
-13	04740401	1	B, U						O RING, A/C Suction Line
-14	04882331	1	B, U			ER0			VALVE, A/C Discharge Line Check
-15	05264642	1	B, U			ER0			CAP, A/C Check Valve
-16	04762788	1	B, U			ER0			VALVE CORE, Service Port
17	55037218AB	1	B, U			ER0			LINE, A/C Liquid
-18	04856849	1	B, U						SWITCH, A/C Cycling
-19	04773188	AR							SWITCH, A/C Low Pressure Cut Off

CHEROKEE (XJ)

SERIES	LINE	BODY	ENGINE	TRANSMISSION
L = LOWLINE	T = JEEP - 2WD B = JEEP - 2WD (RHD) J = JEEP - 4WD U = JEEP - 4WD (RHD)	72 = SPORT UTILITY 2-DR 74 = SPORT UTILITY 4-DR	ENC = 2.5L 4 Cyl Turbo Diesel Engine EPB = 2.5L 4 Cylinder Engine EPE = Engine - 2.5L Power Tech I-4 Cyl. ERH = 4.0L Power Tech I-6 Engine	DDQ = 5-Speed Manual Transmission DGS = 4-Speed Automatic AW4 Transmission DGO = ALL AUTOMATIC TRANSMISSIONS DBB = ALL MANUAL TRANSMISSIONS

AR = use ase required - = Non illustrrated part

Plumbing, Air Conditioning 2.5L Diesel Engine LHD
Figure 24-280

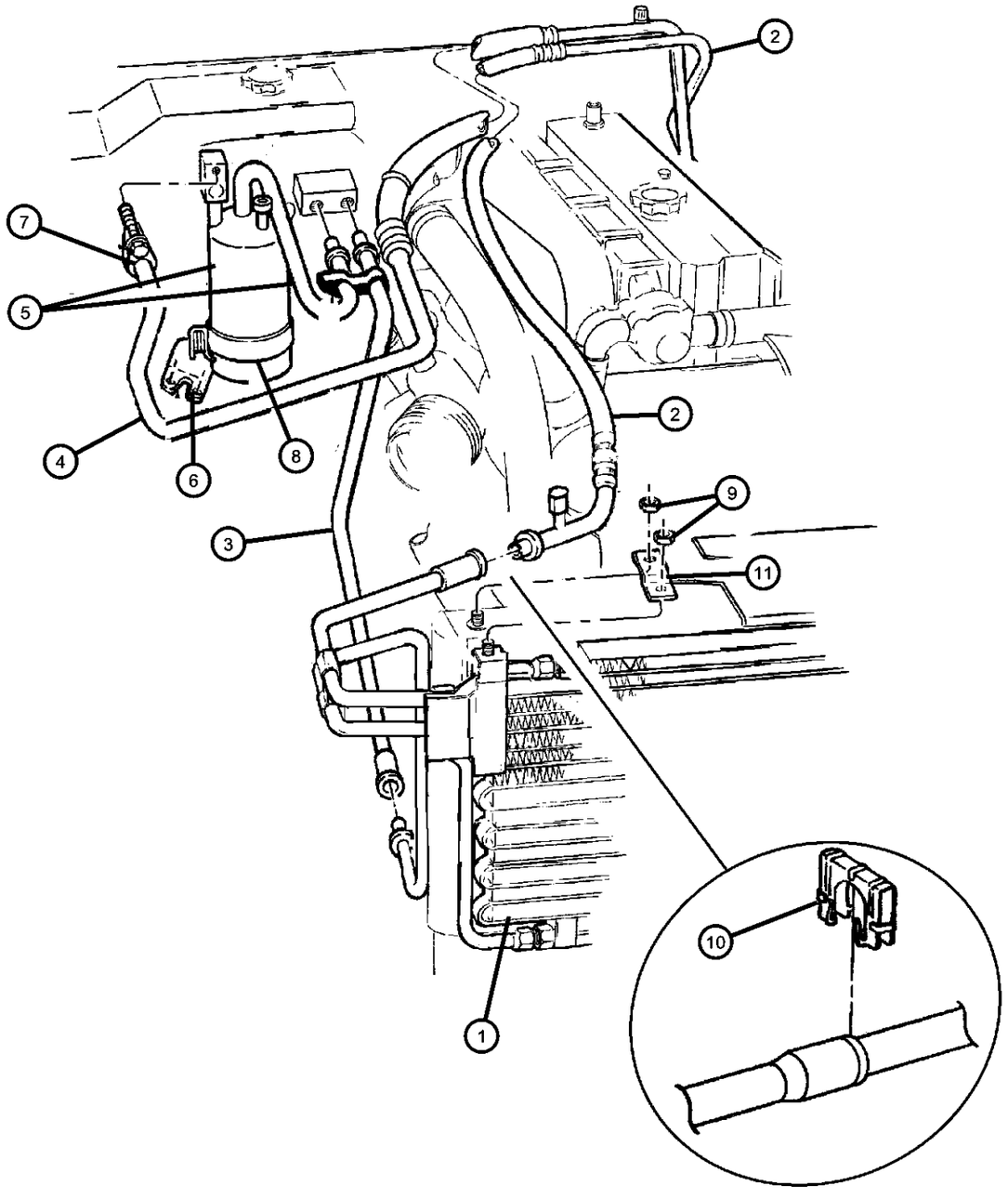

ITEM	PART NUMBER	QTY	LINE	SERIES	BODY	ENGINE	TRANS	TRIM	DESCRIPTION
Note: Sales Code EN0 = 2.5L Diesel Engine									
1	55036599AB	1				EN0			CONDENSER, A/C
2	55037366AB	1	J, T			EN0			LINE, A/C Suction
3	55036650	1	J, T			EN0			LINE, A/C Liquid
4	55036652	1	J, T			EN0			LINE, A/C Discharge
5	55036648AB	1	J, T			EN0			ACCUMULATOR, Suction Line
6	55036646	1	J, T			EN0			BRACKET, Accumulator
7	11502628	3				EP0			BOLT, Hex Flange Head, M8x1.25x30
8	55036206AB	1	J, T			EP0, ER0			BAND, Accumulator Retaining
9	06100814	2				EN0, EP0			NUT, Hex, M6
10									CLIP, A/C Quick Disconnect
	04596152	3	J, T			ER0			Discharge Line
	04596153	1							Suction Liquid Line
11	56002231	2				EN0, ER0			BRACKET, Radiator to Condenser
-12	04740401	1	J, T			EN0			O RING, A/C Suction Line
-13									VALVE, A/C Discharge Line Check
	04882334	1	B, U			EN0			
		1	J, T			EN0			
-14									VALVE CORE, Service Port
	04762788	1	J, T			EN0			
		1	B, U			EN0			

CHEROKEE (XJ)

SERIES	LINE	BODY	ENGINE	TRANSMISSION
L = LOWLINE	T = JEEP - 2WD B = JEEP - 2WD (RHD) J = JEEP - 4WD U = JEEP - 4WD (RHD)	72 = SPORT UTILITY 2-DR 74 = SPORT UTILITY 4-DR	ENC = 2.5L 4 Cyl Turbo Diesel Engine EPB = 2.5L 4 Cylinder Engine EPE = Engine - 2.5L Power Tech I-4 Cyl. ERH = 4.0L Power Tech I-6 Engine	DDQ = 5-Speed Manual Transmission DGS = 4-Speed Automatic AW4 Transmission DGO = ALL AUTOMATIC TRANSMISSIONS DBB = ALL MANUAL TRANSMISSIONS

Plumbing, Air Conditioning 2.5L Diesel Engine RHD
Figure 24-290

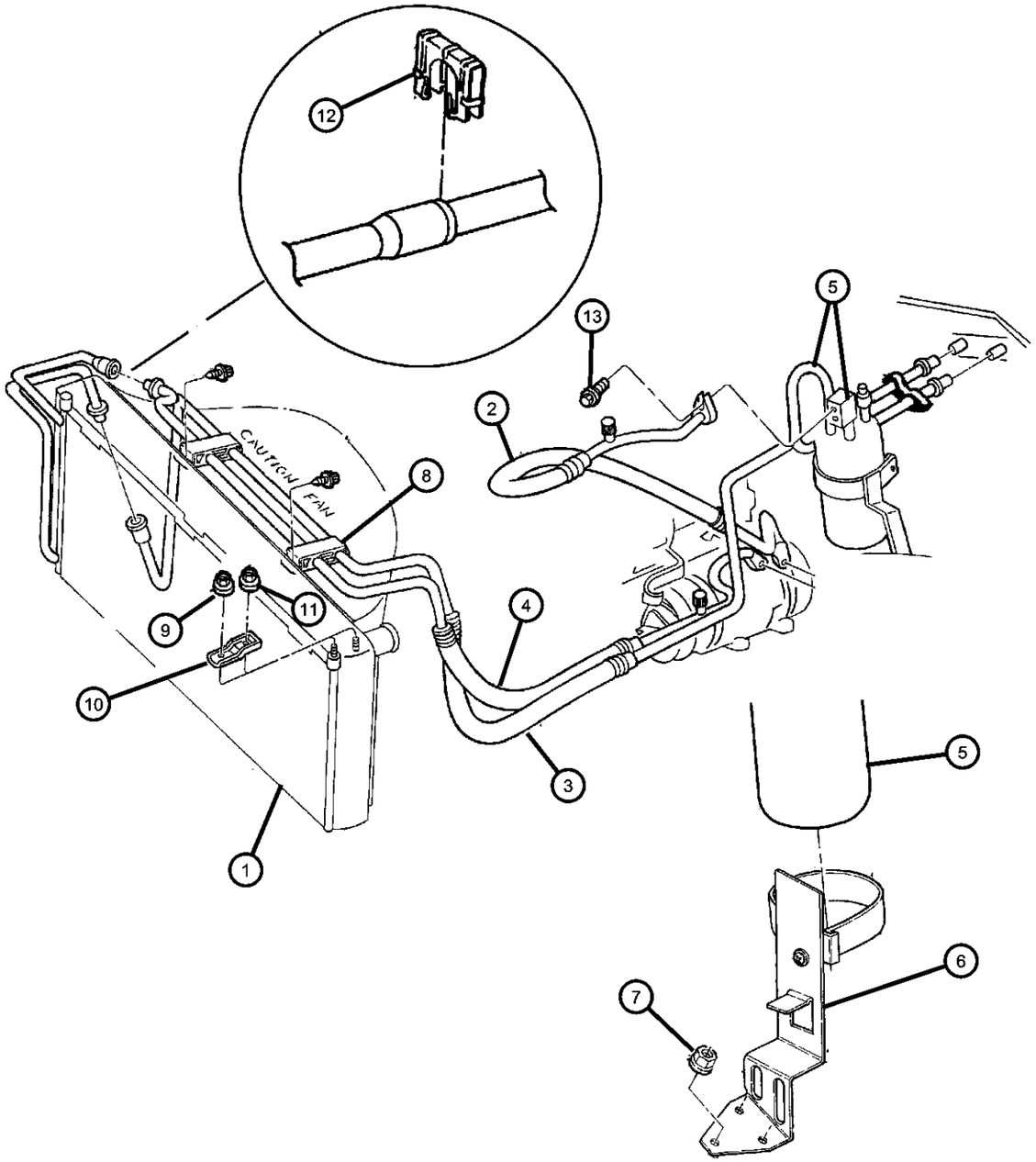

ITEM	PART NUMBER	QTY	LINE	SERIES	BODY	ENGINE	TRANS	TRIM	DESCRIPTION
Note: Sales Code EN0 = 2.5L Diesel Engine									
1	55036599AB	1				EN0			CONDENSER, A/C
2	55036653AB	1	B, U			EN0			LINE, A/C Suction
3	55036651AB	1	B, U			EN0			LINE, A/C Liquid
4	55037821	1	B, U			EN0			LINE, A/C Discharge
5	55036649	1	B, U						ACCUMULATOR, Suction Line
6	55036647	1	B, U			EN0			BRACKET, Accumulator
7	06033560	3	B, U						NUT AND WASHER, Hex Nut-Coned Washer, .25-20
8	55037344	2	B, U			EN0			CLIP, Discharge Line
9	06100814	2				EN0, EP0			NUT, Hex, M6
10	56002231	2				ER0			BRACKET, Radiator to Condenser
11	11502722	2				ER0			NUT, Hex Flange, M5x.8
12									CLIP, A/C Quick Disconnect
	04596152	4	B, U			ER0			Discharge Line
	04596153	1							Suction Liquid Line
13	11502628	1							BOLT, Hex Flange Head, M8x1.25x30
-14	04740401	1	B, U						O RING, A/C Suction Line
-15	04882334	1	B, U			EN0			VALVE, A/C Discharge Line Check
-16	05264642	1	B, U			EN0			CAP, A/C Check Valve
-17	04762788	1	B, U			EN0			VALVE CORE, Service Port
-18	04728856	1	B, U			EN0			SPRING, Quick Disconnect
-19	04741705	1	B, U			EN0			O RING, A/C Liquid Line

CHEROKEE (XJ)

SERIES	LINE	BODY	ENGINE	TRANSMISSION
L = LOWLINE	T = JEEP - 2WD B = JEEP - 2WD (RHD) J = JEEP - 4WD U = JEEP - 4WD (RHD)	72 = SPORT UTILITY 2-DR 74 = SPORT UTILITY 4-DR	ENC = 2.5L 4 Cyl Turbo Diesel Engine EPB = 2.5L 4 Cylinder Engine EPE = Engine - 2.5L Power Tech I-4 Cyl. ERH = 4.0L Power Tech I-6 Engine	DDQ = 5-Speed Manual Transmission DGS = 4-Speed Automatic AW4 Transmission DGO = ALL AUTOMATIC TRANSMISSIONS DBB = ALL MANUAL TRANSMISSIONS

Control, Heater and Air Conditioning
Figure 24-310

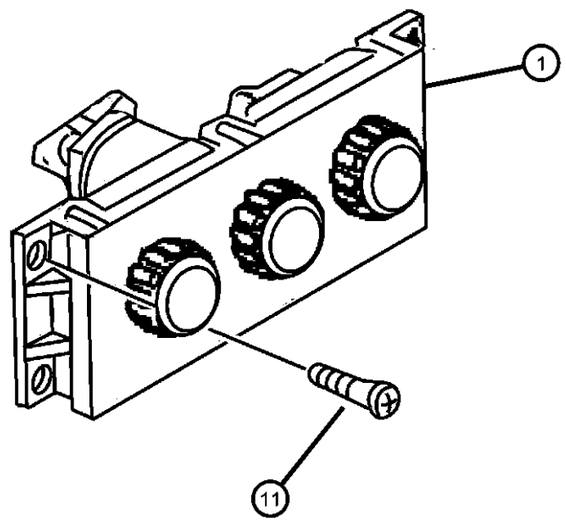

ITEM	PART NUMBER	QTY	LINE	SERIES	BODY	ENGINE	TRANS	TRIM	DESCRIPTION
1									CONTROL, A/C And Heater
	05011343AA	1	J, T						
		1	B, U						
-2	05003393AA	1	J, T						CABLE, Temperature Control
-3									KNOB, A/C And Heater Control - Slide
	04882861	3	J						
		3	B						
-4									HARNESS, A/C And Heater Vacuum
	05011341AA	1	J, T						
		1	B, U						
-5	05003281AA	1	J, T						BULB, Heater and A/C Control
-6									CONTROL, Heater
	05011342AA	1	J, T						
		1	B, U						
-7									CABLE, Temperature Control
	05003393AA	1	J, T						
	05003394AA	1	B, U						
-8	04882861	3	B						KNOB, A/C And Heater Control - Slide
-9									HARNESS, Heater Vacuum
	05011340AA	1	J, T						
		1	B, U						
-10	05003281AA	1	J, T						BULB, Heater and A/C Control
11	06032723	4							SCREW, Self Tapping, M4.2x1.69x19.05
-12									HOSE AND VALVE, Vacuum
	55036912AB	1	J, T			ER0			
	55036913AB	1	J, T			EN0			
	55036916AB	1	B, U			EN0			
	55036917AB	1	B, U			EP0			w/Max. Cooling
	55036918AB	1	B, U			ER0			w/Max. Cooling
	55037468AA	1	B, U			EP0			w/o Max. Cooling
	55037469AA	1	B, U			ER0			w/o Max. Cooling

CHEROKEE (XJ)

SERIES	LINE	BODY	ENGINE	TRANSMISSION
L = LOWLINE	T = JEEP - 2WD B = JEEP - 2WD (RHD) J = JEEP - 4WD U = JEEP - 4WD (RHD)	72 = SPORT UTILITY 2-DR 74 = SPORT UTILITY 4-DR	ENC = 2.5L 4 Cyl Turbo Diesel Engine EPB = 2.5L 4 Cylinder Engine EPE = Engine - 2.5L Power Tech I-4 Cyl. ERH = 4.0L Power Tech I-6 Engine	DDQ = 5-Speed Manual Transmission DGS = 4-Speed Automatic AW4 Transmission DGO = ALL AUTOMATIC TRANSMISSIONS DBB = ALL MANUAL TRANSMISSIONS

Compressor, Air Conditiong 2.5,4.0L Gas Engines
Figure 24-410

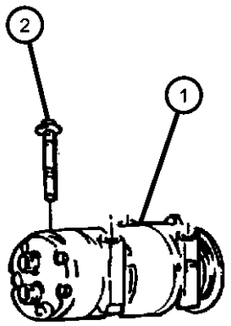

ITEM	PART NUMBER	QTY	LINE	SERIES	BODY	ENGINE	TRANS	TRIM	DESCRIPTION
Note: Sales Code EP0 = 2.5L Gas Engine									
Note: Sales Code ER0 = 4.0L Engine									
1									COMPRESSOR, Air Conditioning
	55037205	1	J, T			EP0, ER0			
	55037214	1	B, U			ER0			
2	55037214	1							STUD, (NOT SERVICED)
-3	55037347	1	B			ER0			JUNCTION BLOCK, Air Conditioning Lines
-4									CLUTCH, A/C Compressor
	04882005	1	J			EP0, ER0			
		1	B			EP0			

CHEROKEE (XJ)

SERIES	LINE	BODY	ENGINE	TRANSMISSION
L = LOWLINE	T = JEEP - 2WD B = JEEP - 2WD (RHD) J = JEEP - 4WD U = JEEP - 4WD (RHD)	72 = SPORT UTILITY 2-DR 74 = SPORT UTILITY 4-DR	ENC = 2.5L 4 Cyl Turbo Diesel Engine EPB = 2.5L 4 Cylinder Engine EPE = Engine - 2.5L Power Tech I-4 Cyl. ERH = 4.0L Power Tech I-6 Engine	DDQ = 5-Speed Manual Transmission DGS = 4-Speed Automatic AW4 Transmission DGO = ALL AUTOMATIC TRANSMISSIONS DBB = ALL MANUAL TRANSMISSIONS

Compressor, Air Conditioning 2.5L Diesel Engine
Figure 24-415

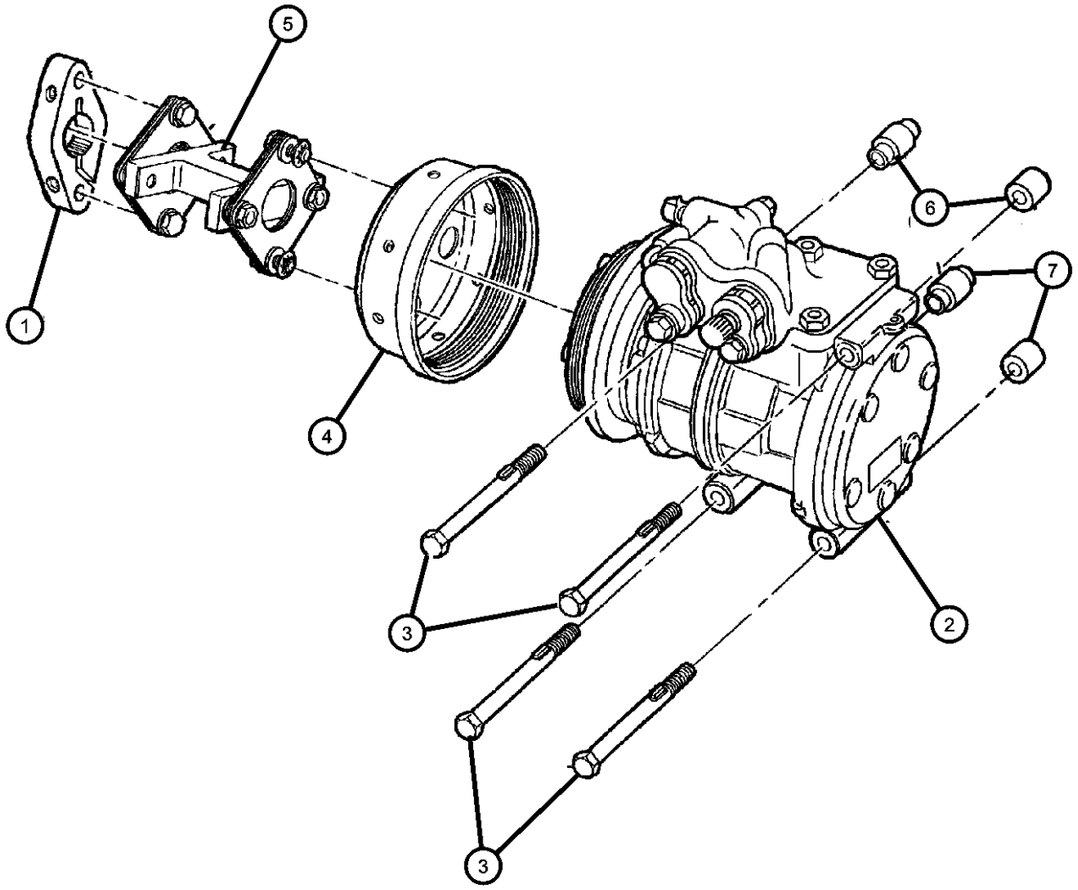

ITEM	PART NUMBER	QTY	LINE	SERIES	BODY	ENGINE	TRANS	TRIM	DESCRIPTION
Note: Sales Code EN0 = 2.5L Diesel Engine									
1	04864600	1				EN0			FLANGE, Accessory Drive
2	55035993AB	1				EN0			COMPRESSOR, Air Conditioning
3	06503802	4				EN0			SCREW, M8-1.25
4	04797754	1				EN0			CUP, A/C DRIVE
5	04797720	1				EN0			SHAFT, Power Steering Pump
6	55036677	2				EN0			SPACER, A/C CompressorFront
7	55036678	2				EN0			SPACER, A/C Compressor

CHEROKEE (XJ)

SERIES	LINE	BODY	ENGINE	TRANSMISSION
L = LOWLINE	T = JEEP - 2WD B = JEEP - 2WD (RHD) J = JEEP - 4WD U = JEEP - 4WD (RHD)	72 = SPORT UTILITY 2-DR 74 = SPORT UTILITY 4-DR	ENC = 2.5L 4 Cyl Turbo Diesel Engine EPB = 2.5L 4 Cylinder Engine EPE = Engine - 2.5L Power Tech I-4 Cyl. ERH = 4.0L Power Tech I-6 Engine	DDQ = 5-Speed Manual Transmission DGS = 4-Speed Automatic AW4 Transmission DGO = ALL AUTOMATIC TRANSMISSIONS DBB = ALL MANUAL TRANSMISSIONS

Compressor Mounting
Figure 24-510

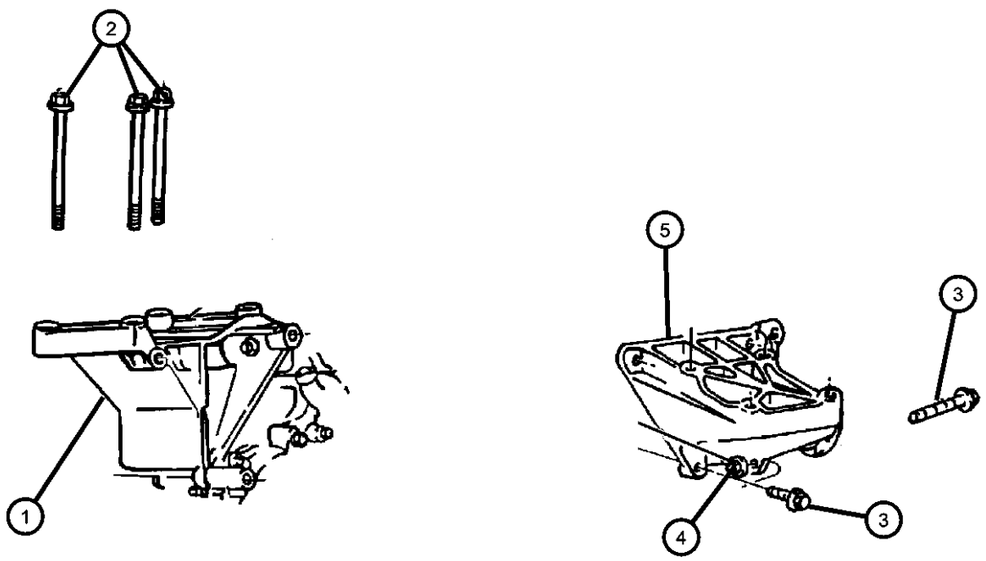

ITEM	PART NUMBER	QTY	LINE	SERIES	BODY	ENGINE	TRANS	TRIM	DESCRIPTION
Note: Sales Code EP0 = 2.5L Gas Engine									
Note: Sales Code ER0 = 4.0L Engine									
1	53010207	1	J, T			EP0			BRACKET, Alternator And Compressor
2	06502957	1	J, T			ER0			BOLT, Hex Flange Head, M10-1.5x90.0
3	J4007073	2							SCREW AND WASHER, .375-16x1.125
4	06502135	4							NUT, Hex Flange, M10x1.5
5									BRACKET, A/C Compressor, With Idler Mounting
	53010023	1	B, U			ER0			
	53011002	1	J, T			ER0			

CHEROKEE (XJ)

SERIES	LINE	BODY	ENGINE	TRANSMISSION
L = LOWLINE	T = JEEP - 2WD B = JEEP - 2WD (RHD) J = JEEP - 4WD U = JEEP - 4WD (RHD)	72 = SPORT UTILITY 2-DR 74 = SPORT UTILITY 4-DR	ENC = 2.5L 4 Cyl Turbo Diesel Engine EPB = 2.5L 4 Cylinder Engine EPE = Engine - 2.5L Power Tech I-4 Cyl. ERH = 4.0L Power Tech I-6 Engine	DDQ = 5-Speed Manual Transmission DGS = 4-Speed Automatic AW4 Transmission DGO = ALL AUTOMATIC TRANSMISSIONS DBB = ALL MANUAL TRANSMISSIONS

Air Distribution Ducts
Figure 24-610

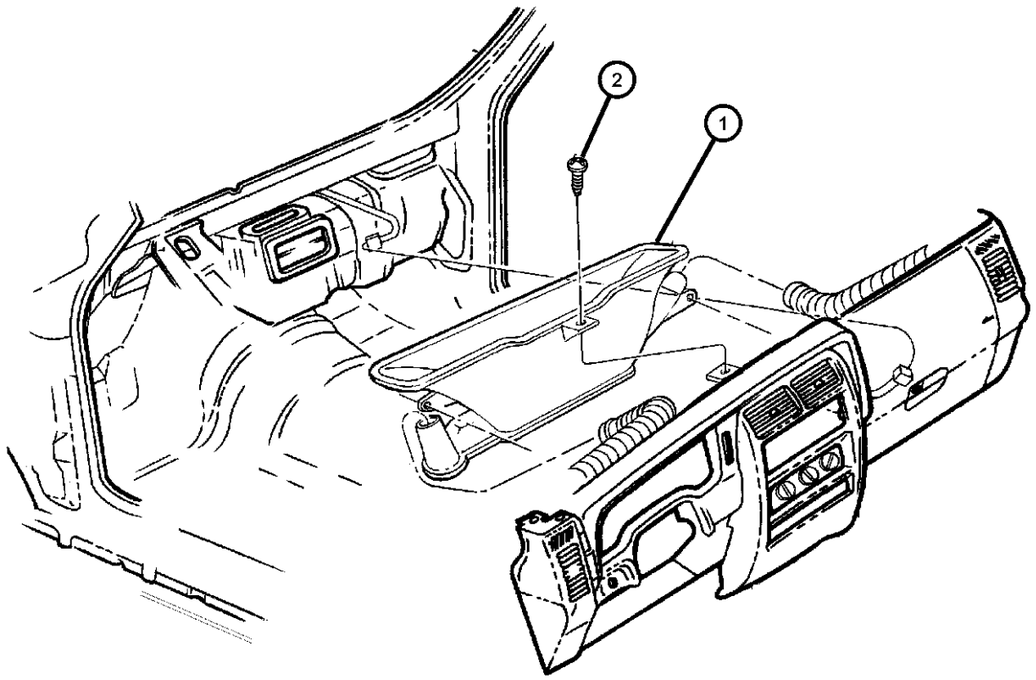

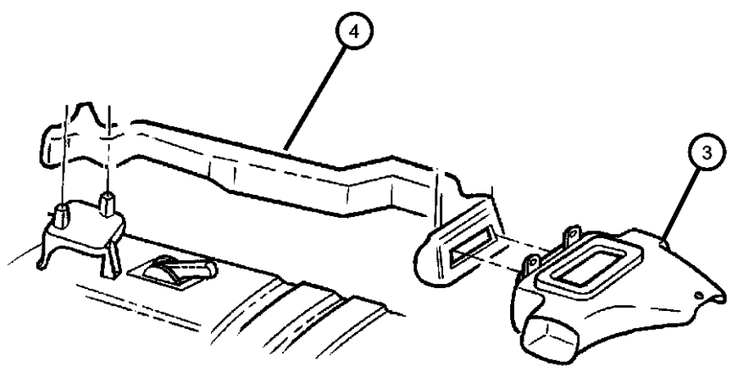

ITEM	PART NUMBER	QTY	LINE	SERIES	BODY	ENGINE	TRANS	TRIM	DESCRIPTION
1									DUCT, Defroster
	55036682	1	J, T						
	55036683	1	B, U						
2	06032723	3							SCREW, Self Tapping, M4.2x1.69x19.05
3									DUCT, Floor Console
	55036869	1	J						
	55036870	1	B						
4	55036789	1							DUCT, Rear Floor Heat
-5									HOSE, Demister
	55115494	1	J, T						Right
		1	B, U						Right
	55115495	1	J, T						Left
		1	B, U						Left

CHEROKEE (XJ)

SERIES	LINE	BODY	ENGINE	TRANSMISSION
L = LOWLINE	T = JEEP - 2WD B = JEEP - 2WD (RHD) J = JEEP - 4WD U = JEEP - 4WD (RHD)	72 = SPORT UTILITY 2-DR 74 = SPORT UTILITY 4-DR	ENC = 2.5L 4 Cyl Turbo Diesel Engine EPB = 2.5L 4 Cylinder Engine EPE = Engine - 2.5L Power Tech I-4 Cyl. ERH = 4.0L Power Tech I-6 Engine	DDQ = 5-Speed Manual Transmission DGS = 4-Speed Automatic AW4 Transmission DGO = ALL AUTOMATIC TRANSMISSIONS DBB = ALL MANUAL TRANSMISSIONS

Group - 25

Emission Systems

025-100 Emission Labels	025-200 EGR System	025-300 Vacuum Canister	025-400 Emission Harness
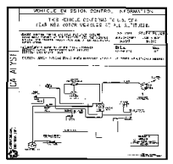	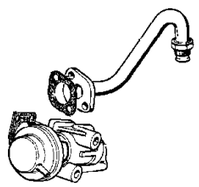		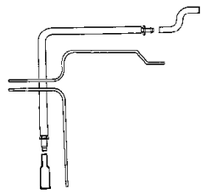

Group - 25 Emission Systems

Illustration Title — Group-Fig. No.

Emission Labels
Emission Labels ..... Fig. 25 - 120

EGR System
EGR System ..... Fig. 25 - 220

Vacuum Canister
Vacuum Canister ..... Fig. 25 - 330

Emission Harness
Emission Control Vacuum Harness ..... Fig. 25 - 430
Emission Control Vacuum Harness ..... Fig. 25 - 450
Vacuum Pump ..... Fig. 25 - 470

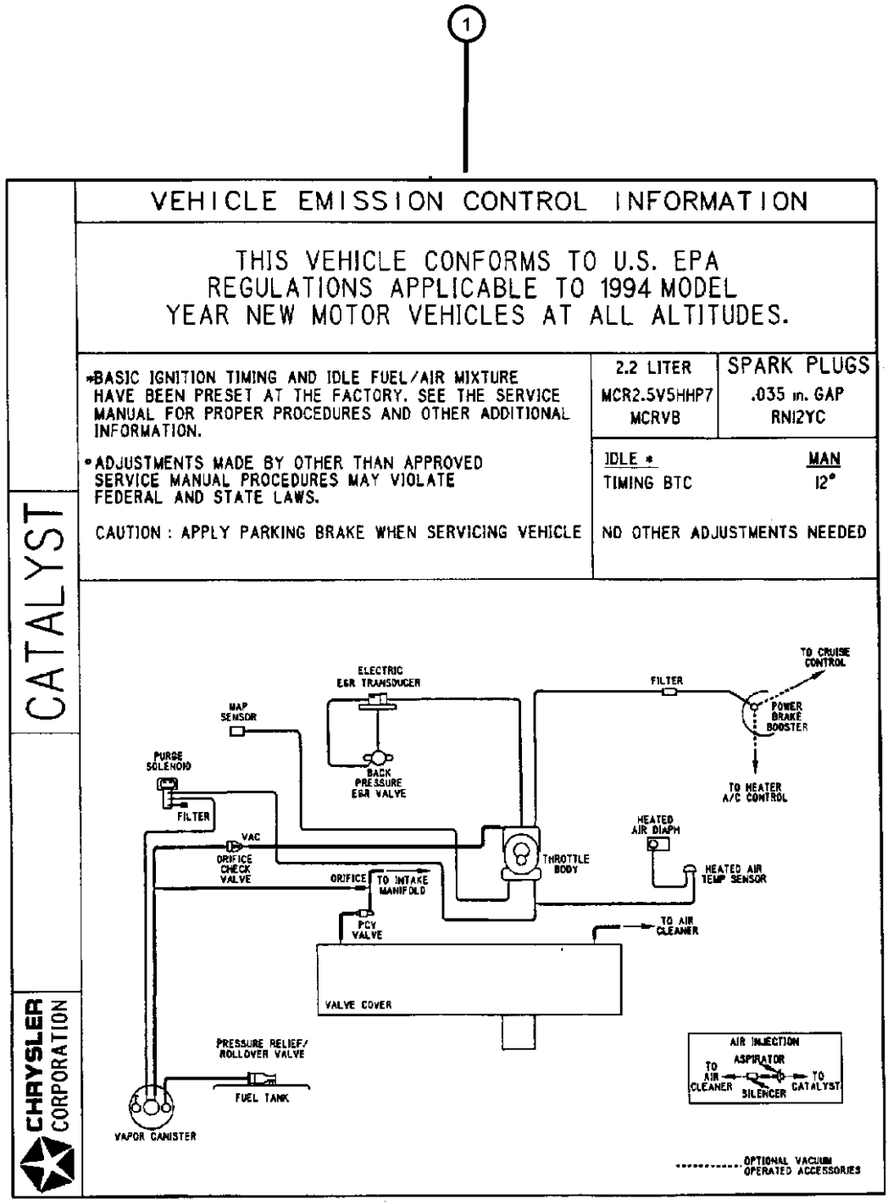

ITEM	PART NUMBER	QTY	LINE	SERIES	BODY	ENGINE	TRANS	TRIM	DESCRIPTION
NOTE: EN0=All 2.5L Diesel Engines DBB=All Manual Transmissions DG0=All Automatic Transmissions									
1									LABEL, Emission
	04854520	1							
	04854521	1				EPE			Canada
	04854522	1				EPE			California
	04854607	1	B, T			ERH			Federal
		1	J		72	ERH	DBB		Federal, w/Manual Transmission
	04854608	1	J			ERH	DG0		Federal, w/Automatic Transmission
		1	U			ERH			Federal
	04854609	1	T			ERH			Canada
		1	J		72	ERH	DBB		Canada, w/Manual Transmission
	04854610	1	J			ERH	DG0		Canada, w/Automatic Transmission
	04854611	1	J		74	ERH	DBB		Federal
	04854612	1	J		74	ERH	DBB		Canada
	04854613	1	B, T			ERH			California
		1	J		72	ERH	DBB		California
	04854614	1	J		74	ERH	DBB		California
		1	U			ERH	DBB		California
	53013637AA	1				EPE			Europe
	53013638AA	1				ERH			Europe
	53013639AA	1	J		72	ERH	DG0		California
		1	J		74	ERH	DG0		California
		1	U			ERH	DG0		California
	53031415AB	1				EN0			Australia

CHEROKEE (XJ)

SERIES	LINE	BODY	ENGINE	TRANSMISSION
L = LOWLINE	T = JEEP - 2WD B = JEEP - 2WD (RHD) J = JEEP - 4WD U = JEEP - 4WD (RHD)	72 = SPORT UTILITY 2-DR 74 = SPORT UTILITY 4-DR	ENC = 2.5L 4 Cyl Turbo Diesel Engine EPB = 2.5L 4 Cylinder Engine EPE = Engine - 2.5L Power Tech I-4 Cyl. ERH = 4.0L Power Tech I-6 Engine	DDQ = 5-Speed Manual Transmission DGS = 4-Speed Automatic AW4 Transmission DGO = ALL AUTOMATIC TRANSMISSIONS DBB = ALL MANUAL TRANSMISSIONS

EGR System
Figure 25-220

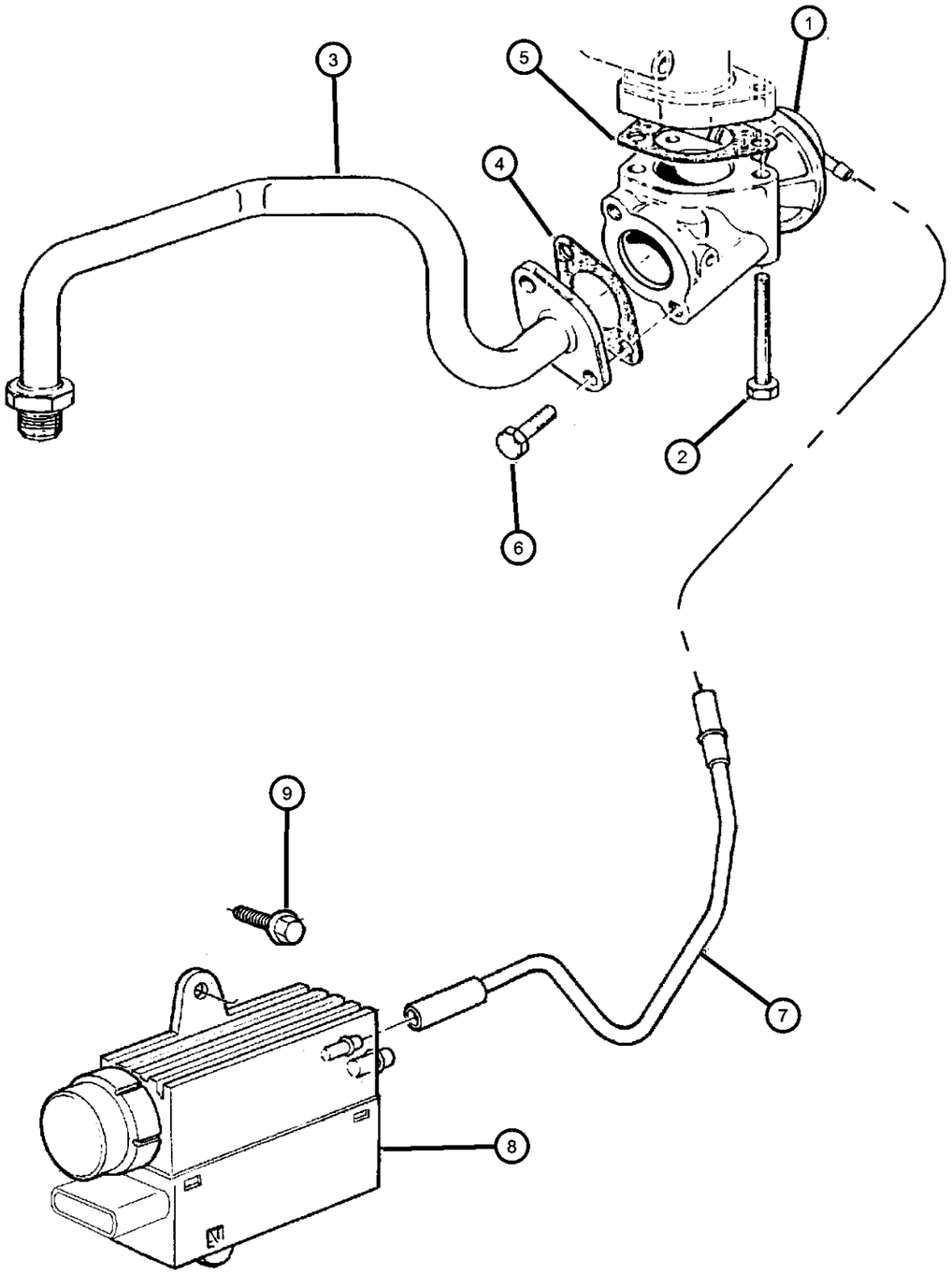

ITEM	PART NUMBER	QTY	LINE	SERIES	BODY	ENGINE	TRANS	TRIM	DESCRIPTION
NOTE: EN0=All 2.5L Diesel Engines									
1	04882409	1				EN0			VALVE, EGR
2	04863749	4				EN0			BOLT
3	04864751	1				EN0			PIPE, EGR to Manifold
4	04720208	1				EN0			GASKET, EGR Tube Flange
5	04778965	1				EN0			GASKET, EGR Tube
6	04864537	4				EN0			BOLT, 8Mx20
7	53031542	1				EN0			TUBE, Exhaust Gas Recovery
8	56027094	1				EN0			MODULATOR, Vacuum Electric
9	56027094	1							SCREW/WASHER, Hex Head, .250-14x.500, (NOT SERVICED)

CHEROKEE (XJ)

SERIES	LINE	BODY	ENGINE	TRANSMISSION
L = LOWLINE	T = JEEP - 2WD B = JEEP - 2WD (RHD) J = JEEP - 4WD U = JEEP - 4WD (RHD)	72 = SPORT UTILITY 2-DR 74 = SPORT UTILITY 4-DR	ENC = 2.5L 4 Cyl Turbo Diesel Engine EPB = 2.5L 4 Cylinder Engine EPE = Engine - 2.5L Power Tech I-4 Cyl. ERH = 4.0L Power Tech I-6 Engine	DDQ = 5-Speed Manual Transmission DGS = 4-Speed Automatic AW4 Transmission DGO = ALL AUTOMATIC TRANSMISSIONS DBB = ALL MANUAL TRANSMISSIONS

Vacuum Canister
Figure 25-330

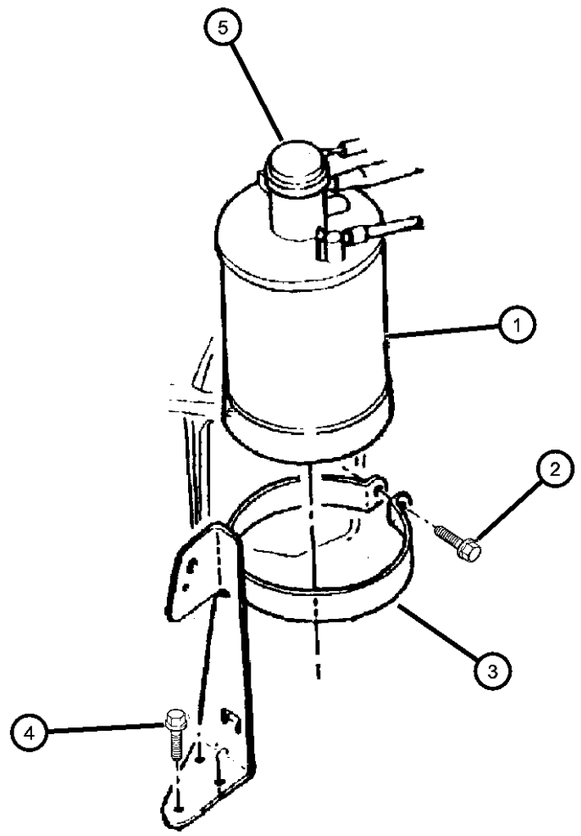

ITEM	PART NUMBER	QTY	LINE	SERIES	BODY	ENGINE	TRANS	TRIM	DESCRIPTION
NOTE: EP0=All 2.5L Gas Engines ER0=All 4.0L Engines DG0=All Automatic Transmissions									
1	53031904AB	1				EP0, ER0			CANISTER, Vapor
2	J9420882	1				EP0, ER0			SCREW, Hex Flange Head, .25-14x1.50
3	53007836	1	J, T			EP0, ER0			BRACKET, Vapor Canister
4	06035058	4				ER0	DG0		SCREW, Hex Flange Head, .19-16x.50
5	04192074	1				EP0, ER0			CAP, Vapor Canister

CHEROKEE (XJ)

SERIES	LINE	BODY	ENGINE	TRANSMISSION
L = LOWLINE	T = JEEP - 2WD B = JEEP - 2WD (RHD) J = JEEP - 4WD U = JEEP - 4WD (RHD)	72 = SPORT UTILITY 2-DR 74 = SPORT UTILITY 4-DR	ENC = 2.5L 4 Cyl Turbo Diesel Engine EPB = 2.5L 4 Cylinder Engine EPE = Engine - 2.5L Power Tech I-4 Cyl. ERH = 4.0L Power Tech I-6 Engine	DDQ = 5-Speed Manual Transmission DGS = 4-Speed Automatic AW4 Transmission DGO = ALL AUTOMATIC TRANSMISSIONS DBB = ALL MANUAL TRANSMISSIONS

Emission Control Vacuum Harness
Figure 25-430

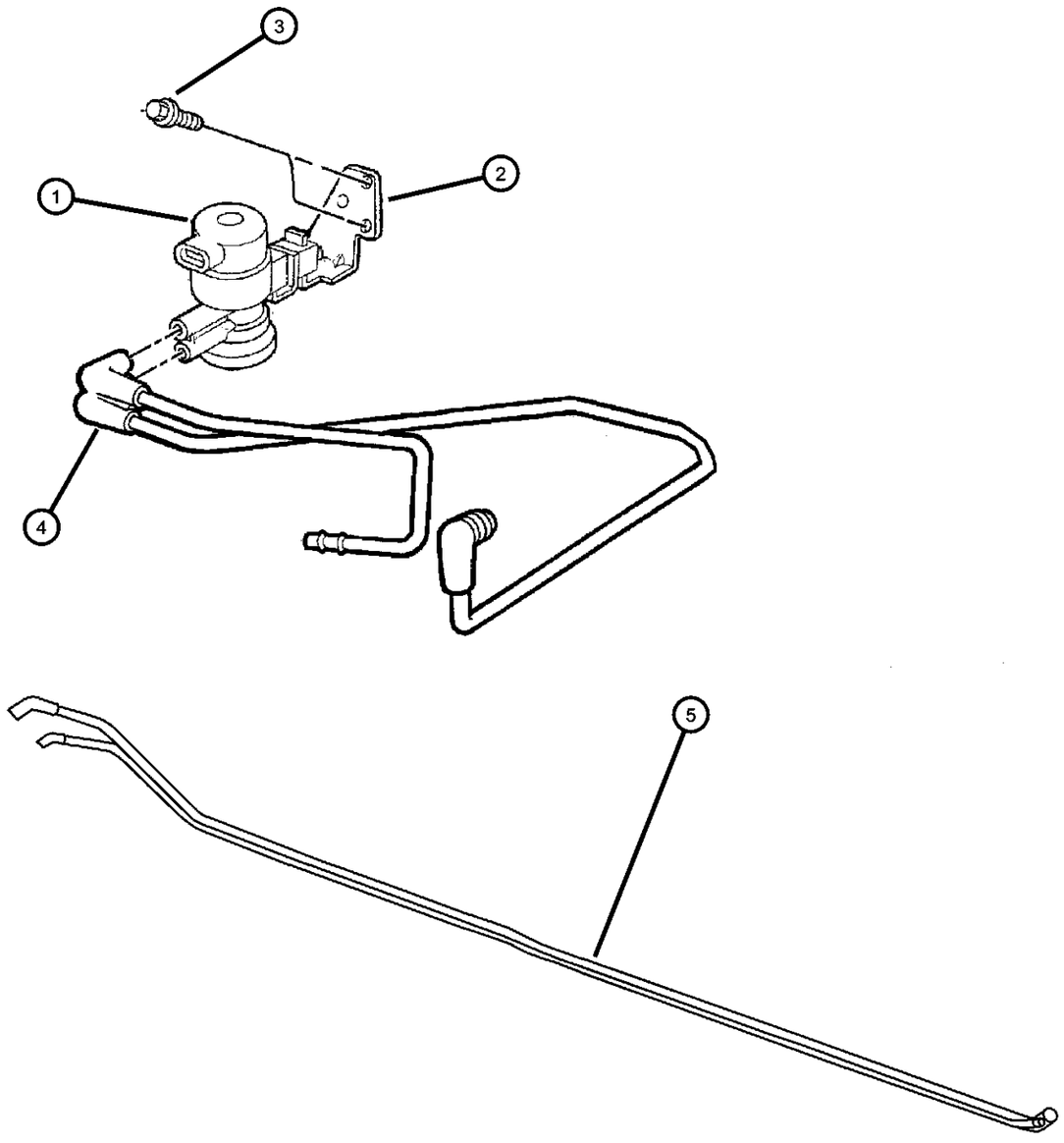

ITEM	PART NUMBER	QTY	LINE	SERIES	BODY	ENGINE	TRANS	TRIM	DESCRIPTION
NOTE: EP0=All 2.5L Gas Engines ER0=All 4.0L Engines									
1	04669475AB	1				EP0, ER0			SOLENOID, Duty Cycle Purge
2	04882996	1				EP0, ER0			BRACKET, Duty Cycle Purge Solenoid
3	06032988	2							SCREW
4									HARNESS, Duty Cycle Purge Solenoid
	04854149	1	B, U			EP0			
	04854151	1	B, U			ER0			
	53030880	1	J, T			EP0			
	53030888	1	J, T			ER0			
5	53030888	1							HARNESS, Vacuum Body Side, (NOT REQUIRED)
-6	53030888	1							PORT, Emission Testing, (NOT REQUIRED)

CHEROKEE (XJ)

SERIES	LINE	BODY	ENGINE	TRANSMISSION
L = LOWLINE	T = JEEP - 2WD B = JEEP - 2WD (RHD) J = JEEP - 4WD U = JEEP - 4WD (RHD)	72 = SPORT UTILITY 2-DR 74 = SPORT UTILITY 4-DR	ENC = 2.5L 4 Cyl Turbo Diesel Engine EPB = 2.5L 4 Cylinder Engine EPE = Engine - 2.5L Power Tech I-4 Cyl. ERH = 4.0L Power Tech I-6 Engine	DDQ = 5-Speed Manual Transmission DGS = 4-Speed Automatic AW4 Transmission DGO = ALL AUTOMATIC TRANSMISSIONS DBB = ALL MANUAL TRANSMISSIONS

Emission Control Vacuum Harness
Figure 25-450

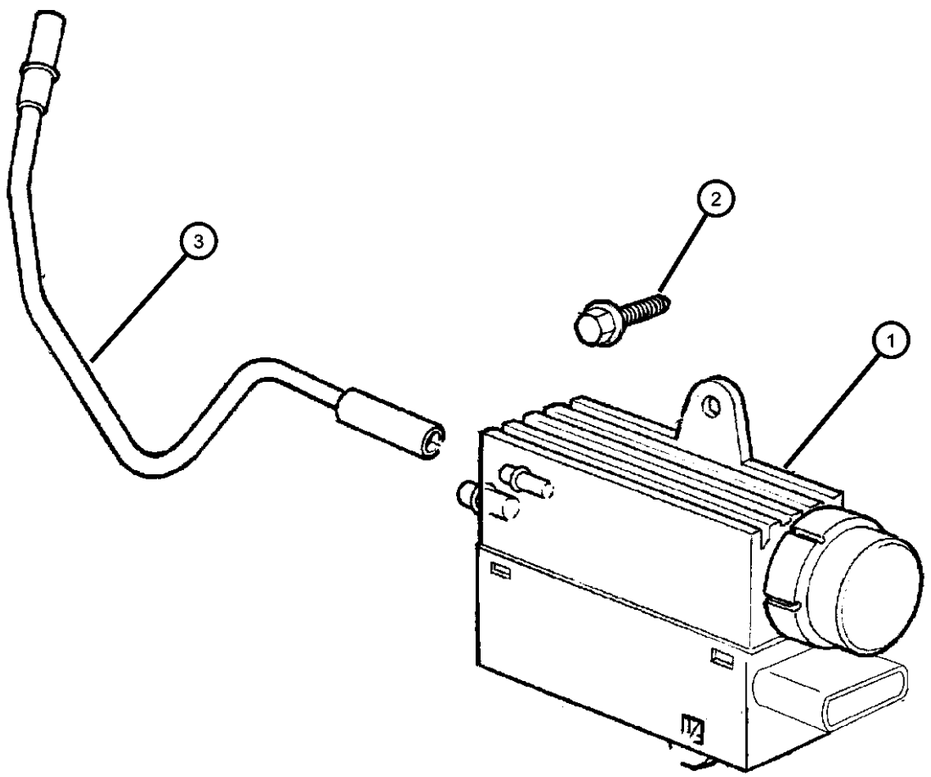

ITEM	PART NUMBER	QTY	LINE	SERIES	BODY	ENGINE	TRANS	TRIM	DESCRIPTION
NOTE: All 2.5L Diesel Engines									
1	56027094	1				EN0			MODULATOR, Vacuum Electric
2	06034959	2				EN0			SCREW, Hex Flange Head, .25-14x.549
3	53031542	1				EN0			TUBE, Exhaust Gas Recovery

CHEROKEE (XJ)

SERIES	LINE	BODY	ENGINE	TRANSMISSION
L = LOWLINE	T = JEEP - 2WD B = JEEP - 2WD (RHD) J = JEEP - 4WD U = JEEP - 4WD (RHD)	72 = SPORT UTILITY 2-DR 74 = SPORT UTILITY 4-DR	ENC = 2.5L 4 Cyl Turbo Diesel Engine EPB = 2.5L 4 Cylinder Engine EPE = Engine - 2.5L Power Tech I-4 Cyl. ERH = 4.0L Power Tech I-6 Engine	DDQ = 5-Speed Manual Transmission DGS = 4-Speed Automatic AW4 Transmission DGO = ALL AUTOMATIC TRANSMISSIONS DBB = ALL MANUAL TRANSMISSIONS

Vacuum Pump
Figure 25-470

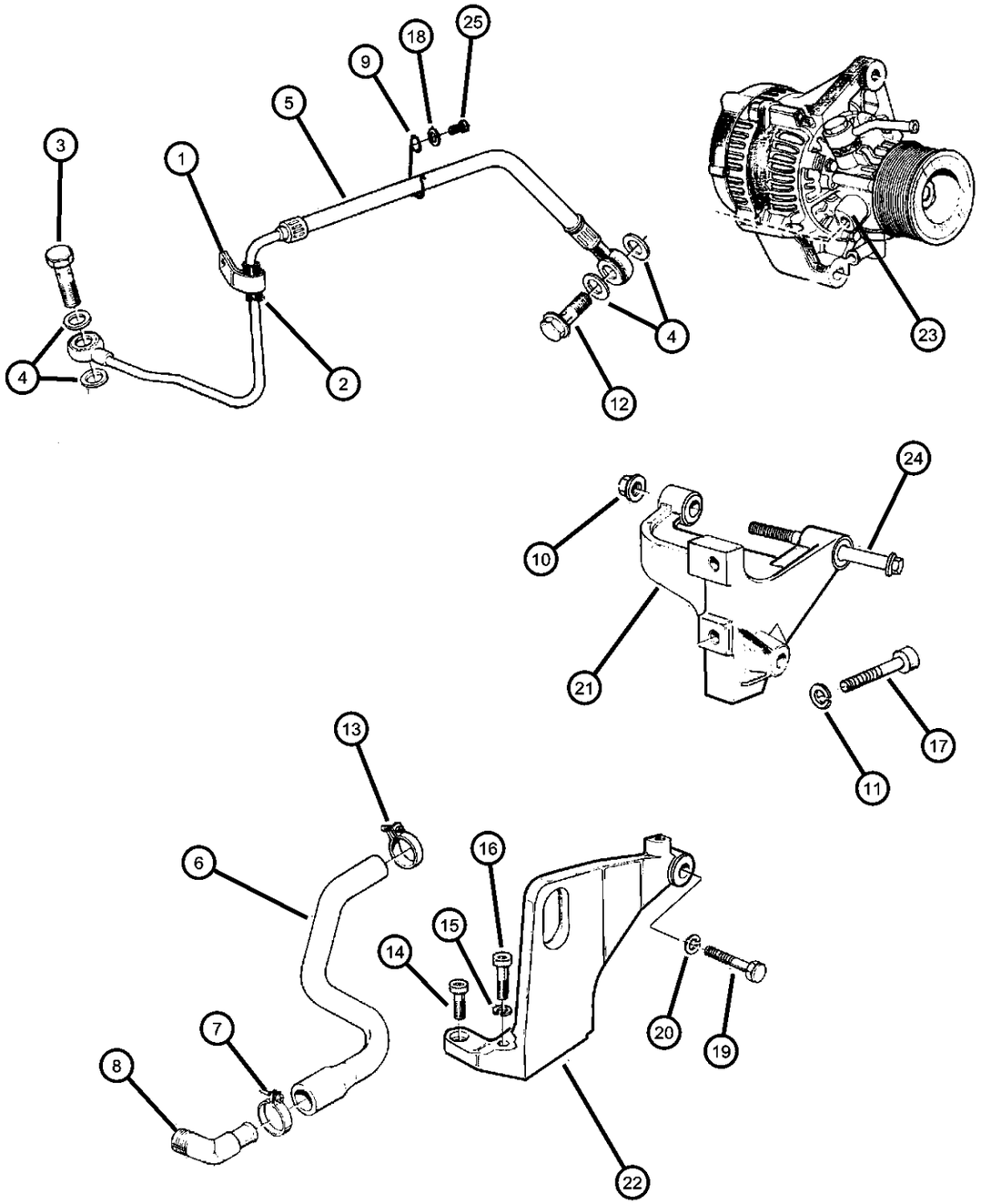

ITEM	PART NUMBER	QTY	LINE	SERIES	BODY	ENGINE	TRANS	TRIM	DESCRIPTION
NOTE: EN0=All 2.5L Diesel Engines									
1	04796035	1				EN0			CLIP, Pipe
2	04797759	1				EN0			SLEEVE, Rubber
3	04762717	1				EN0			BOLT, Banjo
4	04720713	2				EN0			WASHER, Implement Attaching
5	04864601	1				EN0			PIPE, Vacuum Pump
6	04796036	1				EN0			PIPE, Vacuum Pump Oil Drain
7	04886052AA	2				EN0			CLAMP, Heater Hose
8	04773709	1				EN0			ADAPTER, Oil Drain Pipe
9	04886316AA	1				EN0			CLIP, Hose
10	04796038	1				EN0			NUT, Hex Flange, M10x1.5
11	04864758	2				EN0			WASHER
12	04797802	1				EN0			BOLT, Banjo
13	04886051AA	1				EN0			CLAMP, Heater Hose
14	04720684	1				EN0			BOLT, Tow Hook
15	04720688	6				EN0			WASHER, Flat
16	04797768	6				EN0			BOLT, Vacuum Pump Bracket, M10x35
17	04864757	2				EN0			BOLT
18	04720702	1				EN0			WASHER, Plain
19	04723291	1				EN0			BOLT, Starter
20	04723165	3				EN0			WASHER, P Clip
21	04796043	1				EN0			BRACKET, Vacuum Pump
22	04883519AA	1				EN0			BRACKET, Alternator
23	04864441	1				EN0			ALTERNATOR
24	04796042	1				EN0			SCREW, Cap, M10x150
25	04797768	6				EN0			BOLT, Vacuum Pump Bracket, M10x35

CHEROKEE (XJ)

SERIES	LINE	BODY	ENGINE	TRANSMISSION
L = LOWLINE	T = JEEP - 2WD B = JEEP - 2WD (RHD) J = JEEP - 4WD U = JEEP - 4WD (RHD)	72 = SPORT UTILITY 2-DR 74 = SPORT UTILITY 4-DR	ENC = 2.5L 4 Cyl Turbo Diesel Engine EPB = 2.5L 4 Cylinder Engine EPE = Engine - 2.5L Power Tech I-4 Cyl. ERH = 4.0L Power Tech I-6 Engine	DDQ = 5-Speed Manual Transmission DGS = 4-Speed Automatic AW4 Transmission DGO = ALL AUTOMATIC TRANSMISSIONS DBB = ALL MANUAL TRANSMISSIONS

Group - DXJ

Doors and Related Parts

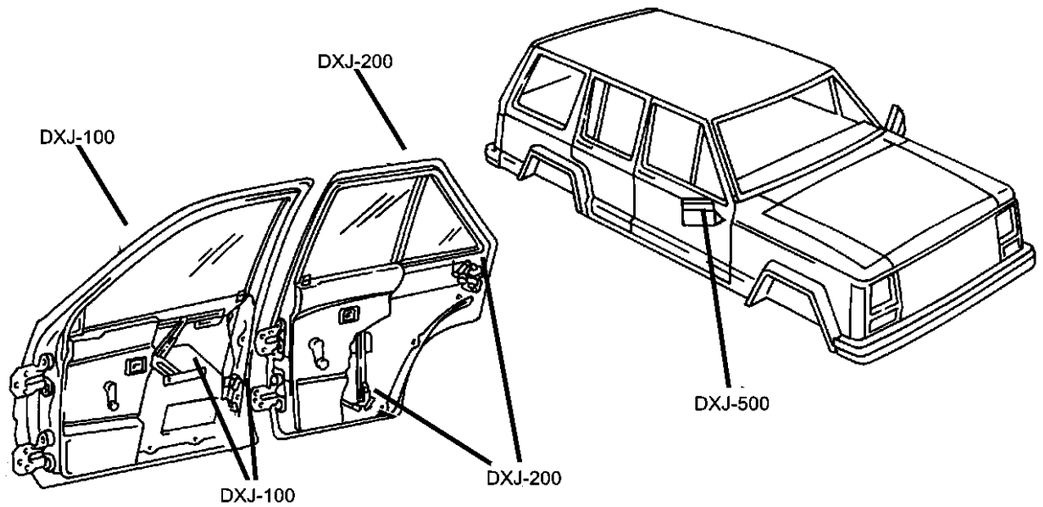

DXJ-100 Front Door	DXJ-200 Rear Door	DXJ-500 Exterior Mirror	DXJ-600 Weatherstrips and Seals
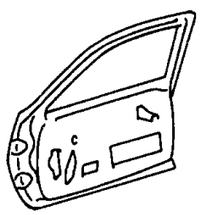	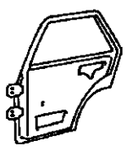	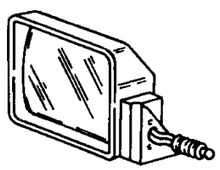	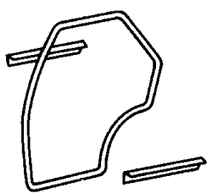

Group - DXJ Doors and Related Parts

Illustration Title — Group-Fig. No.

Front Door
Door, Front ..... Fig. DXJ - 110
Door, Front ..... Fig. DXJ - 120
Door, Front ..... Fig. DXJ - 130

Rear Door
Door, Rear ..... Fig. DXJ - 210
Door, Rear ..... Fig. DXJ - 220
Door, Rear ..... Fig. DXJ - 230

Exterior Mirror
Mirrors, Exterior ..... Fig. DXJ - 510

Weatherstrips and Seals
Door, Front ..... Fig. DXJ - 610
Door, Rear ..... Fig. DXJ - 620

Door, Front
Figure DXJ-110

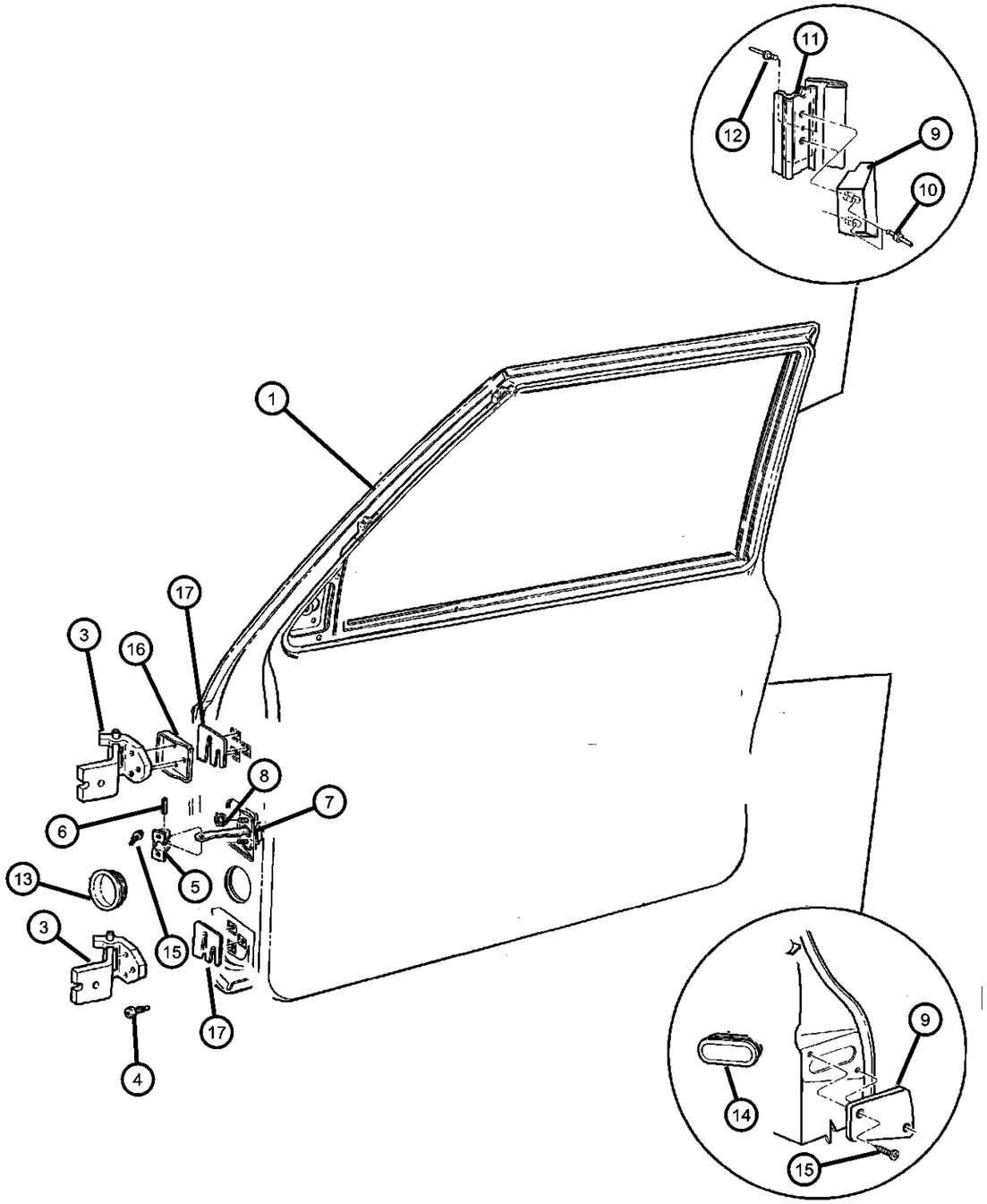

ITEM	PART NUMBER	QTY	LINE	SERIES	BODY	ENGINE	TRANS	TRIM	DESCRIPTION
1									DOOR, Front
	55175424	1			72				Right
	55175425	1			72				Left
	55175464	1			74				Right
	55175465	1			74				Left
-2	55175465	1							PANEL, Door Outer Repair, (NOT SERVICED)
3	55235368AB	4							HINGE, Front Door
4									SCREW, M8-1.25
	06504493	12	B		74				
		12	J		72				
		12	U		72				
		12	T		74				
5	55002361	2							BRACKET, Check Arm
6	55012900	2			74				PIN, Check Arm
7	55235571	2							CHECK, Front Door
8	55235571	2							LOCK NUT, Hex Flange, M6-1.00, (NOT SERVICED)
9									SPACER, Door
	55074906	1			72				Lower, Right
	55074907	1			72				Lower, Left
	55074908	1			72				Upper, Right
	55074909	1			72				Upper, Left
10	J4006990	4			72				RIVET, Blind Expansion (R-Lok)
11	55006216	2			72				REINFORCEMENT, Door Spacer
12	34201684	4			72				RIVET, M3.18x2.37
13	55002367	2							PLUG, Door Wiring Conduit
14	55002368	2							PLUG, Door Latch
15	55002368	2							SCREW, (NOT SERVICED)
16	55004597	AR							PLATE, Door Hinge
17	55004920	AR							SHIM

CHEROKEE (XJ)

SERIES	LINE	BODY	ENGINE	TRANSMISSION
L = LOWLINE	T = JEEP - 2WD B = JEEP - 2WD (RHD) J = JEEP - 4WD U = JEEP - 4WD (RHD)	72 = SPORT UTILITY 2-DR 74 = SPORT UTILITY 4-DR	ENC = 2.5L 4 Cyl Turbo Diesel Engine EPB = 2.5L 4 Cylinder Engine EPE = Engine - 2.5L Power Tech I-4 Cyl. ERH = 4.0L Power Tech I-6 Engine	DDQ = 5-Speed Manual Transmission DGS = 4-Speed Automatic AW4 Transmission DGO = ALL AUTOMATIC TRANSMISSIONS DBB = ALL MANUAL TRANSMISSIONS

AR = use ase required - = Non illustrrated part

Door, Front
Figure DXJ-120

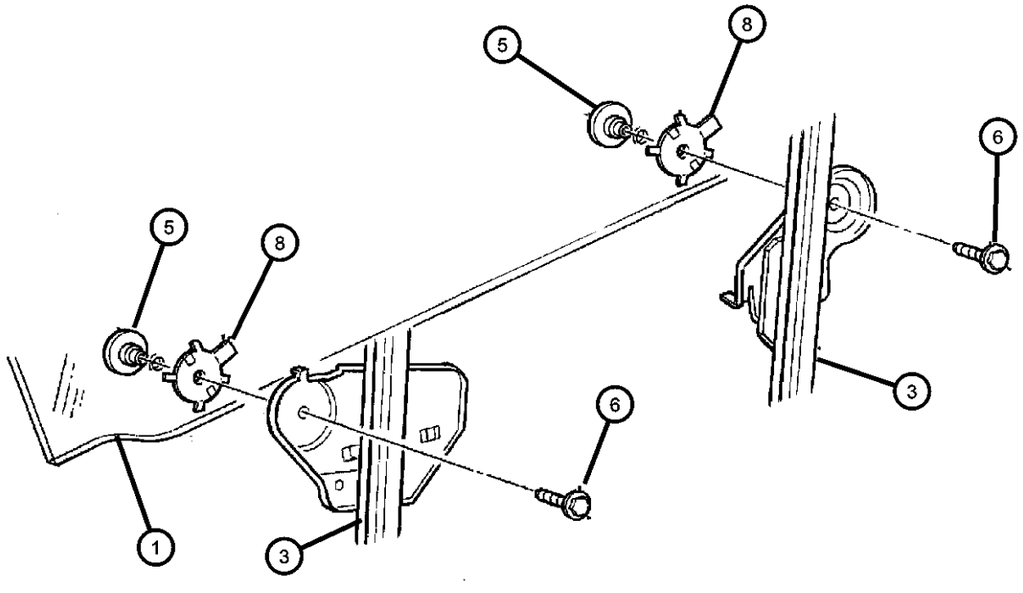

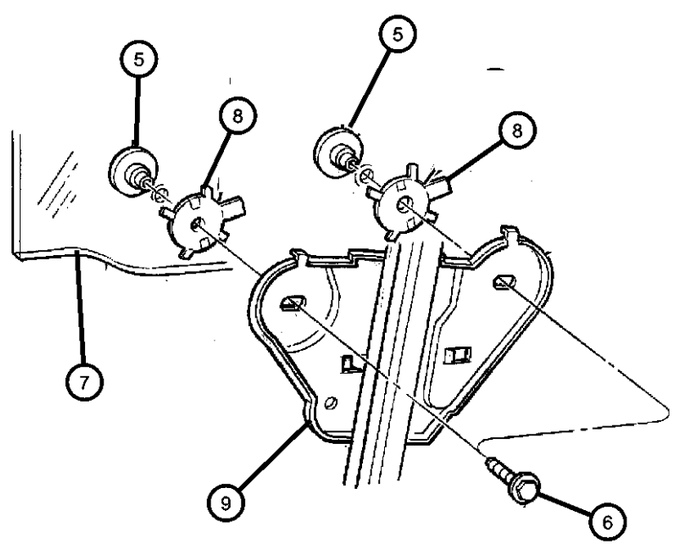

ITEM	PART NUMBER	QTY	LINE	SERIES	BODY	ENGINE	TRANS	TRIM	DESCRIPTION
1									GLASS, Door
	55175436	1			72				Right
	55175437	1			72				Left
-2									CHANNEL, Glass Run Lower
	55076172	1			74				Right
	55076173	1			74				Left
3									REGULATOR, Front Door Window
	55076276AB	1			72				Manual, Right
	55076277AB	1			72				Manual, Left
	55154958AB	1			74				Electric, Right
	55154959AB	1			74				Electric, Left
	55155012AC	1			72				Electric, Right
	55155013AC	1			72				Electric, Left
-4									HANDLE, Window Regulator
	0FW80SC3	2							Grey
	0FW80TT6	2							Spice
5	04415943	2			74				RETAINER, Glass to Liftplate
6	34201807	2							BOLT, Hex Flange Head, M6x1.00x16
7									GLASS, Front Door
	55175430	1			74				Right
	55175431	1			74				Left
8	35026818	2			74				RETAINER, Glass to Liftplate
9									REGULATOR, Front Door Window
	55076052AE	1			74				Manual, Right
	55076053AE	1			74				Manual, Left
	55154958AB	1			74				Electric, Right
	55154959AB	1			74				Electric, Left
-10	55076218	2							SPACER, Door Handle

CHEROKEE (XJ)

SERIES	LINE	BODY	ENGINE	TRANSMISSION
L = LOWLINE	T = JEEP - 2WD B = JEEP - 2WD (RHD) J = JEEP - 4WD U = JEEP - 4WD (RHD)	72 = SPORT UTILITY 2-DR 74 = SPORT UTILITY 4-DR	ENC = 2.5L 4 Cyl Turbo Diesel Engine EPB = 2.5L 4 Cylinder Engine EPE = Engine - 2.5L Power Tech I-4 Cyl. ERH = 4.0L Power Tech I-6 Engine	DDQ = 5-Speed Manual Transmission DGS = 4-Speed Automatic AW4 Transmission DGO = ALL AUTOMATIC TRANSMISSIONS DBB = ALL MANUAL TRANSMISSIONS

Door, Front
Figure DXJ-130

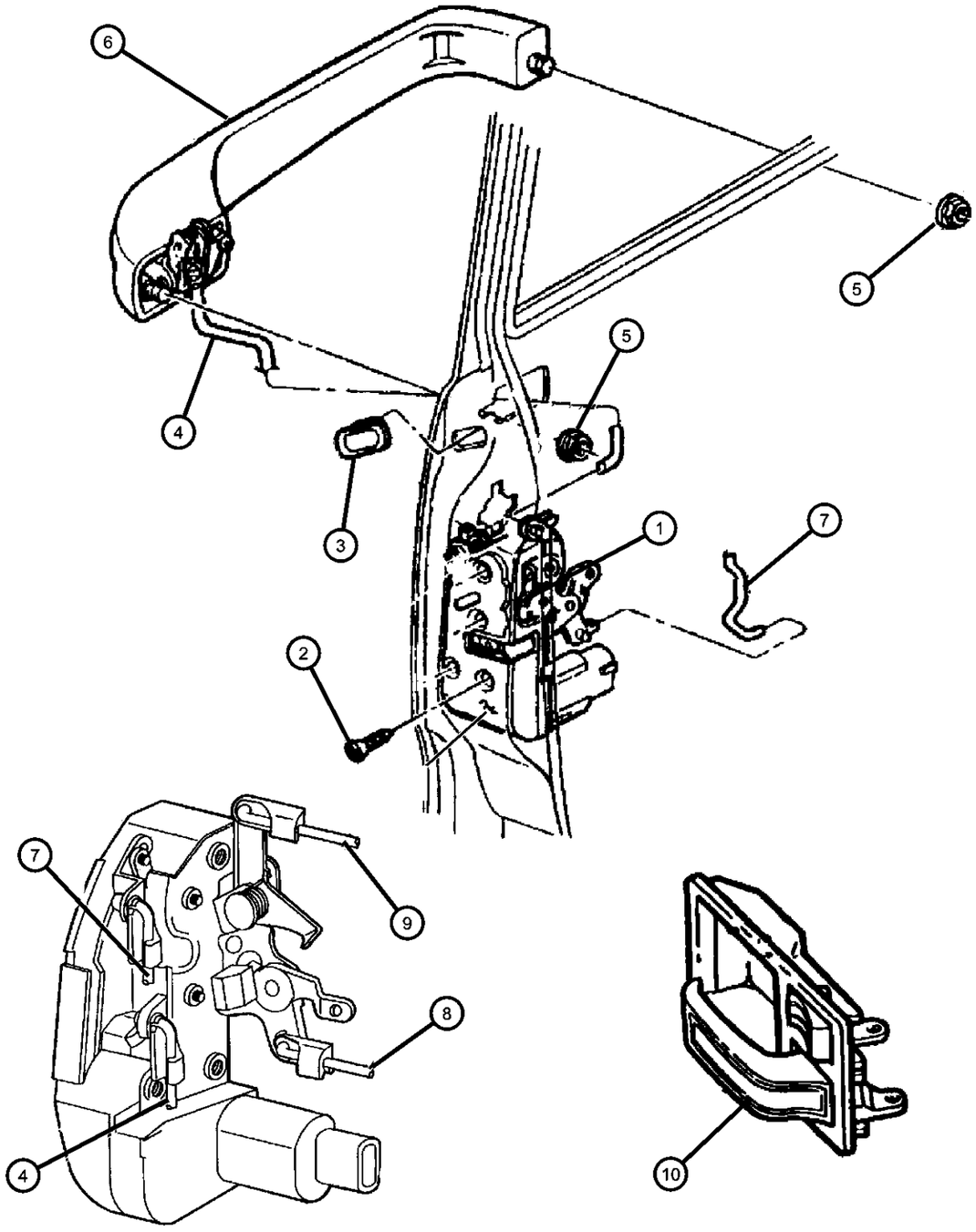

ITEM	PART NUMBER	QTY	LINE	SERIES	BODY	ENGINE	TRANS	TRIM	DESCRIPTION
1									LATCH PKG, FRONT DOOR
	04773636AB	1							without Power Locks, Right
	04773637AB	1							without Power Locks, Left
	04798914AC	1							with Power Locks, Right
	04798915AC	1							with Power Locks, Left
2	06033876	6							SCREW, Tapping, M6.3x1.8x38.1
3	55002368	2							PLUG, Door Latch
4									ROD, Outside Handle to Latch
	55076226	1			72				Right
	55076227	1			72				Left
	55235318	1			74				Right
	55235319	1			74				Left
5	06503226	4							NUT, Hex Flange, M5x.8
6									HANDLE, Exterior Door
	55076056AB	1			74				Right
	55076057AB	1			74				Left
7									LINK, Key Cylinder To Latch
	55076046	1			72				Right
	55076047	1			72				Left
	55235326	1			74				Right
	55235327	1			74				Left
8									LINK, Latch Release
	55076040AB	1			74				Right
	55076041AB	1			74				Left
	55076316AB	1			72				Right
	55076317AB	1			72				Left
9									ROD, Inside Lock to Latch
	55076272AC	1			74				Right
	55076273AC	1			74				Left
	55076320AB	1			72				Right
	55076321AB	1			72				Left
10									HANDLE, Door Interior, 06505499AA Nut/Rivet
	55076054	1	B		72				Right

CHEROKEE (XJ)

SERIES	LINE	BODY	ENGINE	TRANSMISSION
L = LOWLINE	T = JEEP - 2WD B = JEEP - 2WD (RHD) J = JEEP - 4WD U = JEEP - 4WD (RHD)	72 = SPORT UTILITY 2-DR 74 = SPORT UTILITY 4-DR	ENC = 2.5L 4 Cyl Turbo Diesel Engine EPB = 2.5L 4 Cylinder Engine EPE = Engine - 2.5L Power Tech I-4 Cyl. ERH = 4.0L Power Tech I-6 Engine	DDQ = 5-Speed Manual Transmission DGS = 4-Speed Automatic AW4 Transmission DGO = ALL AUTOMATIC TRANSMISSIONS DBB = ALL MANUAL TRANSMISSIONS

Door, Front
Figure DXJ-130

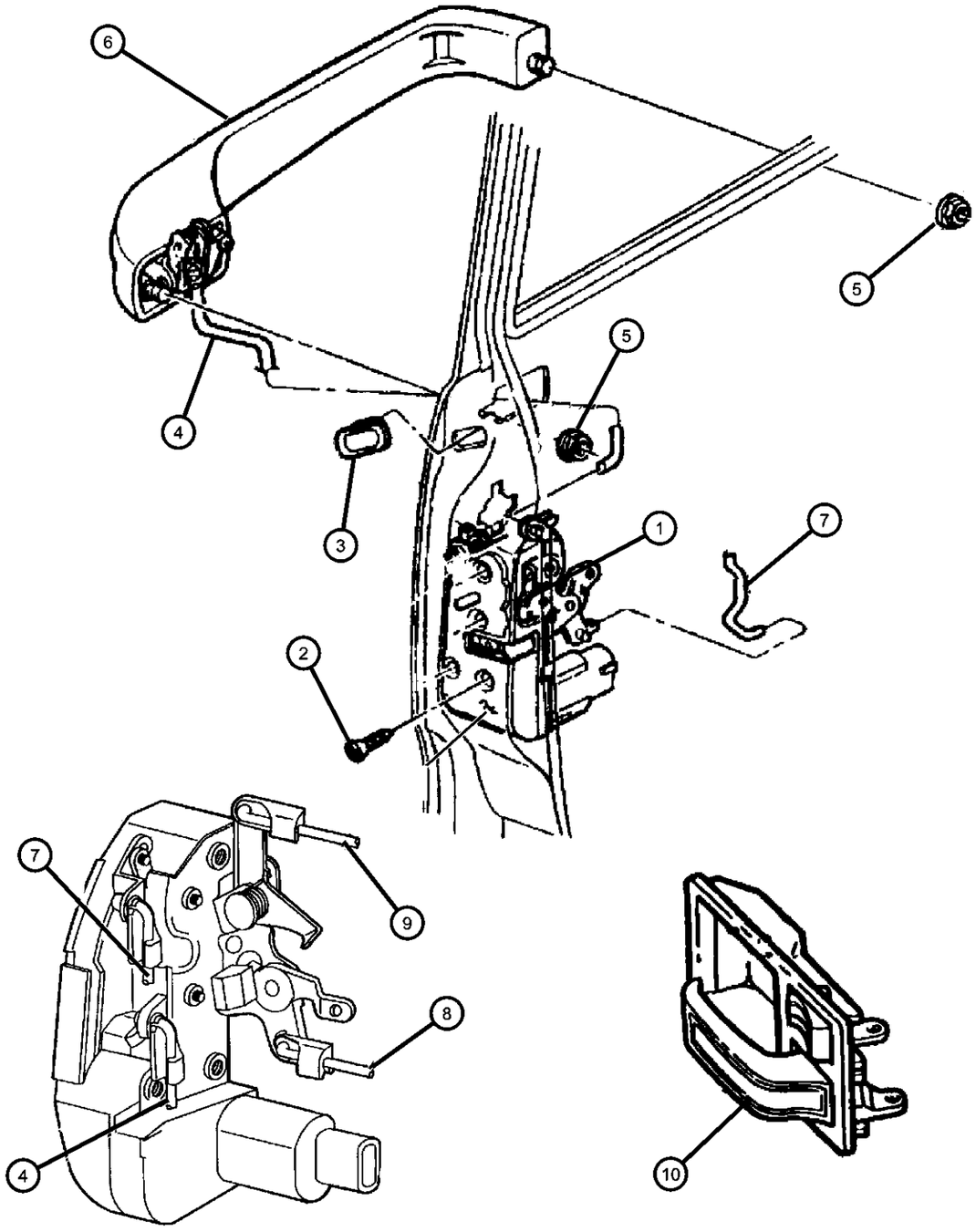

ITEM	PART NUMBER	QTY	LINE	SERIES	BODY	ENGINE	TRANS	TRIM	DESCRIPTION
		1			74				Right
	55076055	1	B		72				Left
		1			74				Left

CHEROKEE (XJ)

SERIES	LINE	BODY	ENGINE	TRANSMISSION
L = LOWLINE	T = JEEP - 2WD B = JEEP - 2WD (RHD) J = JEEP - 4WD U = JEEP - 4WD (RHD)	72 = SPORT UTILITY 2-DR 74 = SPORT UTILITY 4-DR	ENC = 2.5L 4 Cyl Turbo Diesel Engine EPB = 2.5L 4 Cylinder Engine EPE = Engine - 2.5L Power Tech I-4 Cyl. ERH = 4.0L Power Tech I-6 Engine	DDQ = 5-Speed Manual Transmission DGS = 4-Speed Automatic AW4 Transmission DGO = ALL AUTOMATIC TRANSMISSIONS DBB = ALL MANUAL TRANSMISSIONS

Door, Rear
Figure DXJ-210

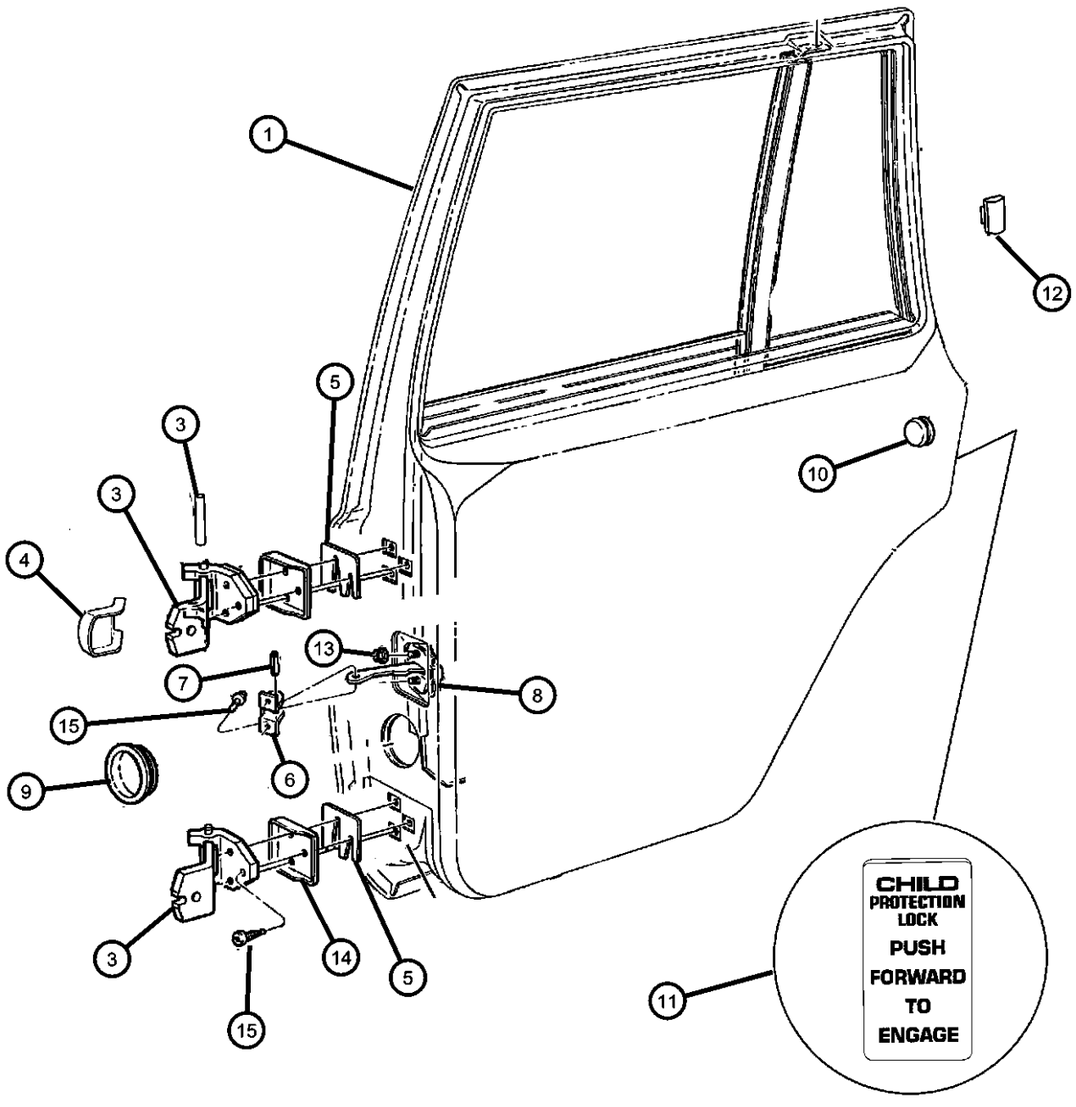

ITEM	PART NUMBER	QTY	LINE	SERIES	BODY	ENGINE	TRANS	TRIM	DESCRIPTION
1									DOOR, Rear
	55175600	1			74				Right
	55175601	1			74				Left
-2	55175601	1							PANEL, Door Outer Repair, 55235970-1aa, (NOT SERVICED)
3	55235369AB	4			74				HINGE, Door
4	55074942	4			74				COVER, Body Half Hinge
5	55004597	AR			74				SHIM, Door Hinge Plate
6	55002361	2			74				BRACKET, Check Arm
7	55012900	2			74				PIN, Check Arm
8	55075259	2			74				CHECK, Rear Door
9	55002367	2			74				PLUG, Door Wiring Conduit
10	34202049	2							PLUG, Access Hole
11	04615722	2			74				LABEL, Child Protection Lock, English
12	04615722	2							SHIM, (NOT SERVICED)
13	04615722	2							NUT, (NOT SERVICED)
14									TAPPING PLATE, Door Hinge
	55000248	2			74				Right
	55000249	2			74				Left
15	55000249	2							SCREW, (NOT SERVICED)

CHEROKEE (XJ)

SERIES	LINE	BODY	ENGINE	TRANSMISSION
L = LOWLINE	T = JEEP - 2WD B = JEEP - 2WD (RHD) J = JEEP - 4WD U = JEEP - 4WD (RHD)	72 = SPORT UTILITY 2-DR 74 = SPORT UTILITY 4-DR	ENC = 2.5L 4 Cyl Turbo Diesel Engine EPB = 2.5L 4 Cylinder Engine EPE = Engine - 2.5L Power Tech I-4 Cyl. ERH = 4.0L Power Tech I-6 Engine	DDQ = 5-Speed Manual Transmission DGS = 4-Speed Automatic AW4 Transmission DGO = ALL AUTOMATIC TRANSMISSIONS DBB = ALL MANUAL TRANSMISSIONS

Door, Rear
Figure DXJ-220

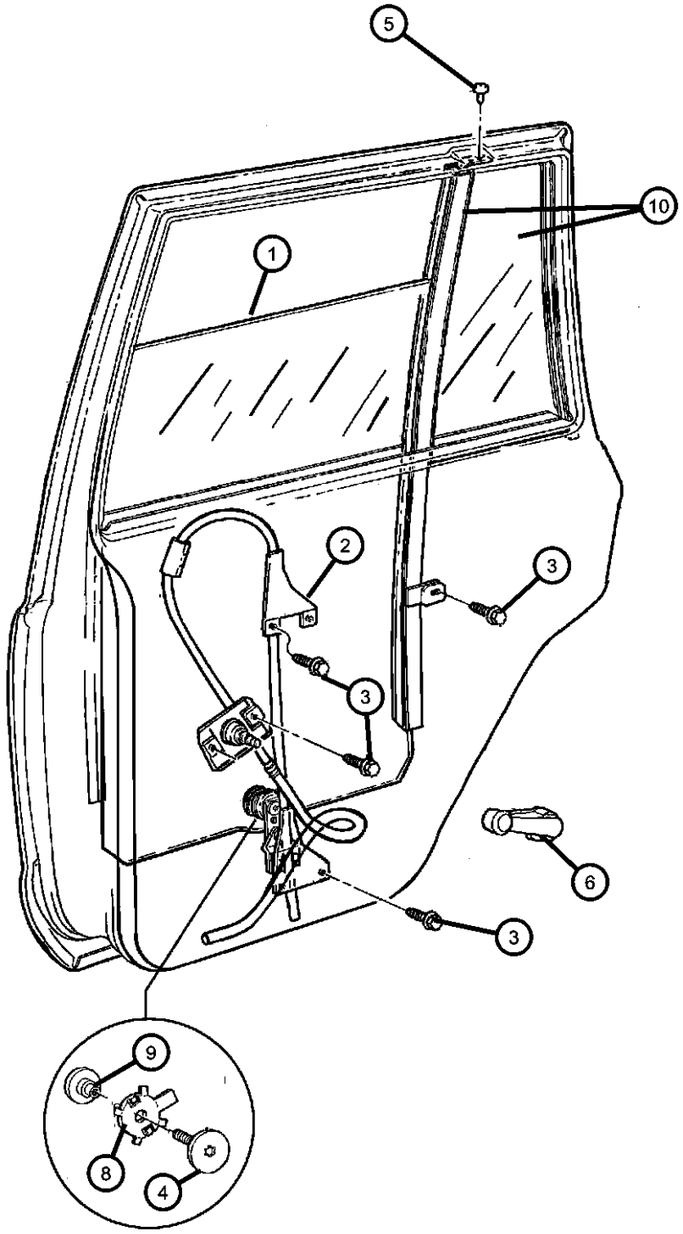

ITEM	PART NUMBER	QTY	LINE	SERIES	BODY	ENGINE	TRANS	TRIM	DESCRIPTION
1									GLASS, Rear Door
	55000590	1			74				Tinted, Right
	55000591	1			74				Tinted, Left
	55175066	1			74				Privacy, Right
	55175067	1			74				Privacy, Left
2									REGULATOR, Rear Door Window
	55076292	1			74				Manual, Right
	55076293	1			74				Manual, Left
	55154960	1			74				Electric, Right
	55154961	1			74				Electric, Left
3	06504357	14			74				SCREW AND WASHER, Hex Head, M6x1x12
4	55154752	2			74				SCREW FASTNER, Glass To Regulator, M6
5	55154752	2							SCREW, (NOT SERVICED)
6									HANDLE, Window Regulator
	0FW80SC3	2			74				Grey
	0FW80TT6	2			74				Spice
-7	11500654	2			74				NUT, U Multi Thread, M4 x .70 x 17.00
8	35026818	2			74				RETAINER, Glass to Liftplate
9	04415943	2			74				RETAINER, Glass to Liftplate
10									GLASS, Rear Door
	55235562	1			74				Privacy, Right
	55235563	1			74				Privacy, Left
	55235564	1			74				Tinted, Right
	55235565	1			74				Tinted, Left

CHEROKEE (XJ)

SERIES	LINE	BODY	ENGINE	TRANSMISSION
L = LOWLINE	T = JEEP - 2WD B = JEEP - 2WD (RHD) J = JEEP - 4WD U = JEEP - 4WD (RHD)	72 = SPORT UTILITY 2-DR 74 = SPORT UTILITY 4-DR	ENC = 2.5L 4 Cyl Turbo Diesel Engine EPB = 2.5L 4 Cylinder Engine EPE = Engine - 2.5L Power Tech I-4 Cyl. ERH = 4.0L Power Tech I-6 Engine	DDQ = 5-Speed Manual Transmission DGS = 4-Speed Automatic AW4 Transmission DGO = ALL AUTOMATIC TRANSMISSIONS DBB = ALL MANUAL TRANSMISSIONS

Door, Rear
Figure DXJ-230

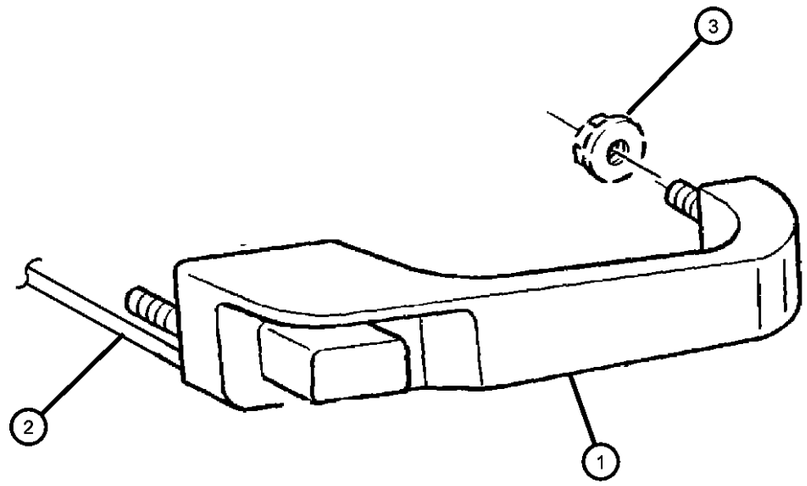

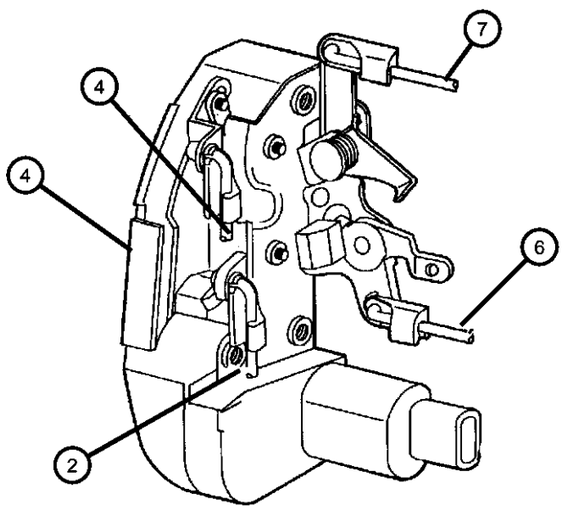

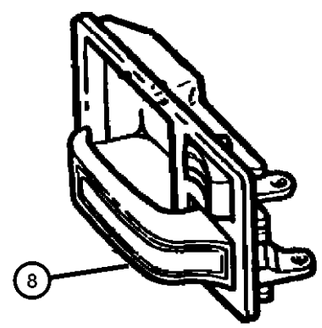

ITEM	PART NUMBER	QTY	LINE	SERIES	BODY	ENGINE	TRANS	TRIM	DESCRIPTION
1									HANDLE, Exterior Door
	55076056AB	1			74				Right
	55076057AB	1			74				Left
2	55076368	2			74				ROD, Outside Handle to Latch
3	06503226	4			74				NUT, Hex Flange, M5x.8
4									LATCH, Door Manual with Child Guard
	55235203AB	1			74				W/ Power Locks, Left
	55235204AB	1			74				W/o Power Locks, Right
	55235205AB	1			74				W/o Power Locks, Left
-5	55235202AB	1			74				LATCH, Rear Door, W/ Power Locks, Right
6									ROD, Inside Handle to Latch, Latch To Handle
	55076070AB	1			74				Right
	55076071AB	1			74				Left
7									ROD, Inside Handle to Latch, Latch To Lock
	55076066AC	1			74				Right
	55076067AC	1			74				Left
8									HANDLE, Door Interior
	55076054	1			74				Right
	55076055	1	J		74				Left
-9	04520288	2			74				STRIKER, Door Latch
-10	06503120	4			74				SCREW AND WASHER, Button Head Torx

CHEROKEE (XJ)

SERIES	LINE	BODY	ENGINE	TRANSMISSION
L = LOWLINE	T = JEEP - 2WD B = JEEP - 2WD (RHD) J = JEEP - 4WD U = JEEP - 4WD (RHD)	72 = SPORT UTILITY 2-DR 74 = SPORT UTILITY 4-DR	ENC = 2.5L 4 Cyl Turbo Diesel Engine EPB = 2.5L 4 Cylinder Engine EPE = Engine - 2.5L Power Tech I-4 Cyl. ERH = 4.0L Power Tech I-6 Engine	DDQ = 5-Speed Manual Transmission DGS = 4-Speed Automatic AW4 Transmission DGO = ALL AUTOMATIC TRANSMISSIONS DBB = ALL MANUAL TRANSMISSIONS

Mirrors, Exterior
Figure DXJ-510

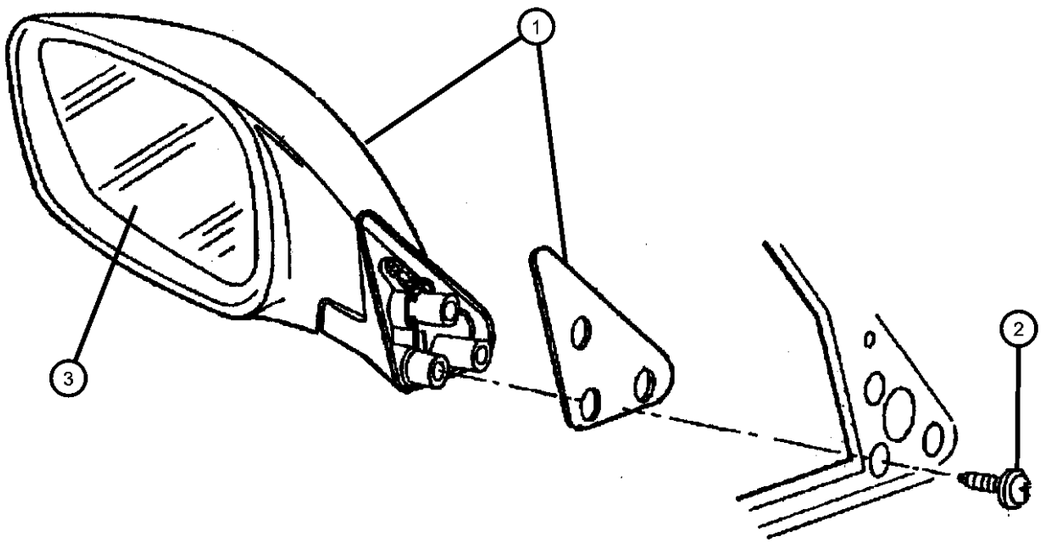

ITEM	PART NUMBER	QTY	LINE	SERIES	BODY	ENGINE	TRANS	TRIM	DESCRIPTION
1									MIRROR, Outside Rearview
	55154946AB	1	J, T						Black Manual Foldaway, Right
	55154947AB	1	J, T						Black Manual Foldaway, Left
	55154948AB	1							Black Electric Foldaway, Right
	55154949AB	1							Black Electric Foldaway, Left
	55154950AB	1							Electric Heated Foldaway, Right
	55154951AB	1	J, T						Electric Heated Foldaway, Left
	55154952AB	1	B, U						Electric Heated Foldaway, Right
	55154953AB	1	B, U						Electric Heated Foldaway, Left
	55156024AC	1	B, U						Black Manual Remote, Right
	55156025AB	1	B, U						Black Manual Remote, Left
2	J4004648	6							SCREW, Pan Head, .25-20x.620
3	J4004648	6							GLASS, Mirror Replacement, (NOT SERVICED)

CHEROKEE (XJ)

SERIES	LINE	BODY	ENGINE	TRANSMISSION
L = LOWLINE	T = JEEP - 2WD B = JEEP - 2WD (RHD) J = JEEP - 4WD U = JEEP - 4WD (RHD)	72 = SPORT UTILITY 2-DR 74 = SPORT UTILITY 4-DR	ENC = 2.5L 4 Cyl Turbo Diesel Engine EPB = 2.5L 4 Cylinder Engine EPE = Engine - 2.5L Power Tech I-4 Cyl. ERH = 4.0L Power Tech I-6 Engine	DDQ = 5-Speed Manual Transmission DGS = 4-Speed Automatic AW4 Transmission DGO = ALL AUTOMATIC TRANSMISSIONS DBB = ALL MANUAL TRANSMISSIONS

Door, Front
Figure DXJ-610

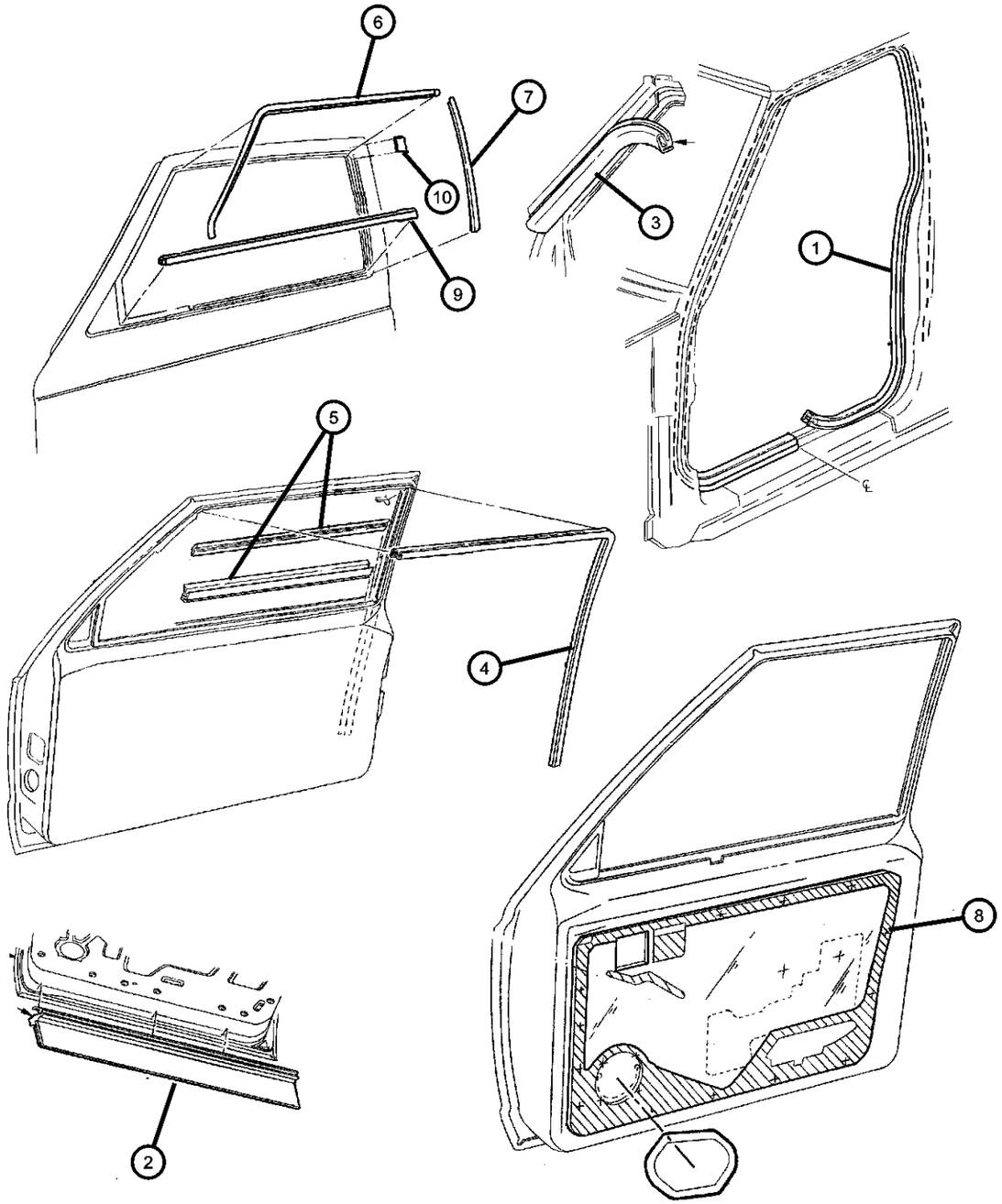

ITEM	PART NUMBER	QTY	LINE	SERIES	BODY	ENGINE	TRANS	TRIM	DESCRIPTION
1									WEATHERSEAL, Full Door To Body
	55176146	2			72				
	55176148	2			74				
2									SEAL, Rocker
	55235410AB	2			74				
	55235411AB	2			72				
3	55175355AC	2							SEAL, Door, Secondary
4									WEATHERSTRIP, Glass Channel Run
	55175352AB	1			74				Right
	55175353AB	1			74				Left
	55175368AB	1			72				Right
	55175369AB	1			72				Left
5									WEATHERSTRIP, Door Belt
	55175358	1			74				Inner, Right
	55175359	1			74				Inner, Left
	55175370	1			72				Inner, Right
	55175371	1			72				Inner, Left
6									MOLDING, Door
	55176194	1			74				Right
	55176195	1			74				Left
	55176196	1			72				Right
	55176197	1			72				Left
7									MOLDING, Front Door Frame
	55235778	1							Right
	55235779	1							Left
8									WATERDAM, Front Door
	55175348AB	1			72				Right
	55175349AB	1			72				Left
	55175362AB	1			74				Right
	55175363AB	1			74				Left
9									WEATHERSTRIP, Door Belt
	55175360AB	1			74				Right

CHEROKEE (XJ)

SERIES	LINE	BODY	ENGINE	TRANSMISSION
L = LOWLINE	T = JEEP - 2WD B = JEEP - 2WD (RHD) J = JEEP - 4WD U = JEEP - 4WD (RHD)	72 = SPORT UTILITY 2-DR 74 = SPORT UTILITY 4-DR	ENC = 2.5L 4 Cyl Turbo Diesel Engine EPB = 2.5L 4 Cylinder Engine EPE = Engine - 2.5L Power Tech I-4 Cyl. ERH = 4.0L Power Tech I-6 Engine	DDQ = 5-Speed Manual Transmission DGS = 4-Speed Automatic AW4 Transmission DGO = ALL AUTOMATIC TRANSMISSIONS DBB = ALL MANUAL TRANSMISSIONS

Door, Front
Figure DXJ-610

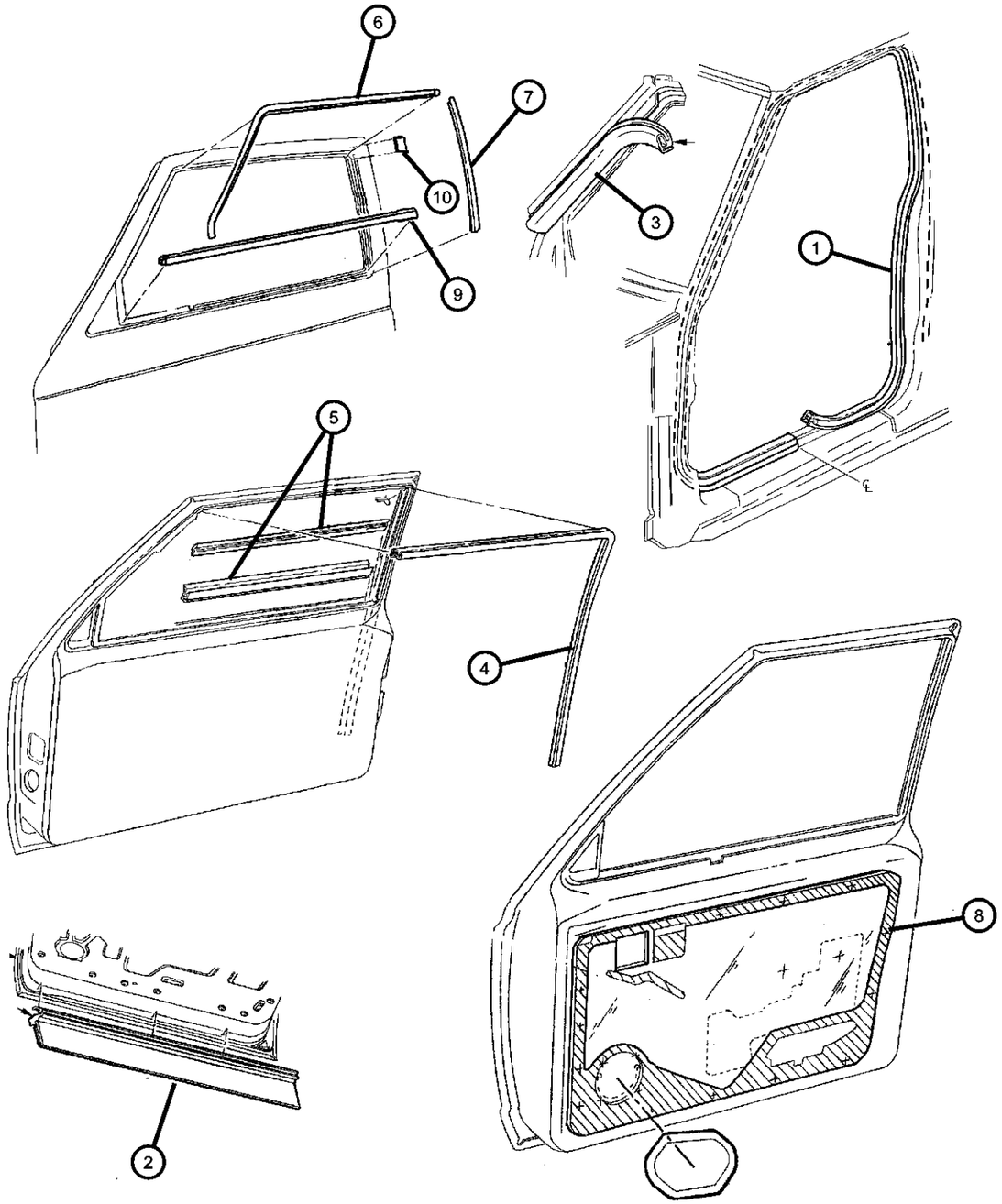

ITEM	PART NUMBER	QTY	LINE	SERIES	BODY	ENGINE	TRANS	TRIM	DESCRIPTION
	55175361AB	1			74				Left
	55175372AB	1			72				Right
	55175373AB	1			72				Left
10	55175373AB	1							SHIM, (NOT SERVICED)

CHEROKEE (XJ)

SERIES	LINE	BODY	ENGINE	TRANSMISSION
L = LOWLINE	T = JEEP - 2WD B = JEEP - 2WD (RHD) J = JEEP - 4WD U = JEEP - 4WD (RHD)	72 = SPORT UTILITY 2-DR 74 = SPORT UTILITY 4-DR	ENC = 2.5L 4 Cyl Turbo Diesel Engine EPB = 2.5L 4 Cylinder Engine EPE = Engine - 2.5L Power Tech I-4 Cyl. ERH = 4.0L Power Tech I-6 Engine	DDQ = 5-Speed Manual Transmission DGS = 4-Speed Automatic AW4 Transmission DGO = ALL AUTOMATIC TRANSMISSIONS DBB = ALL MANUAL TRANSMISSIONS

Door, Rear
Figure DXJ-620

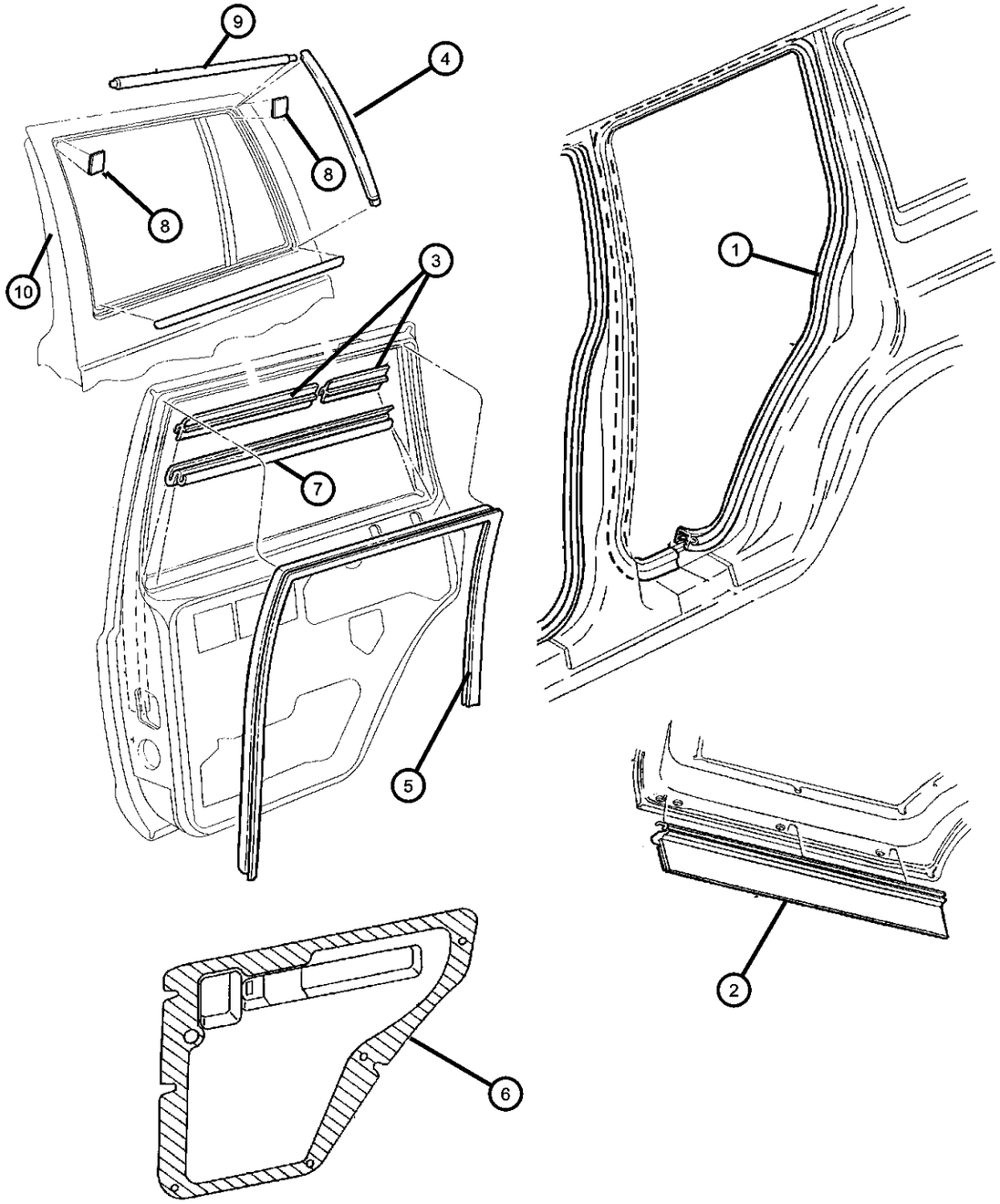

ITEM	PART NUMBER	QTY	LINE	SERIES	BODY	ENGINE	TRANS	TRIM	DESCRIPTION
1	55175351	2			74				WEATHERSEAL, Full Door To Body
2	55235412AB	2			74				SEAL, Rocker
3	55175952AB	2			74				WEATHERSTRIP, BeltOuter
4									MOLDING, Rear Door Frame
	55235780	2			74				Right
	55235781	2			74				Left
5									WEATHERSTRIP, Door Glass Run
	55175356AC	1			74				Right
	55175357AC	1			74				Left
6									WATERDAM, Rear Door
	55235300AB	1	J, T, U		74				Right
	55235301AB	1	J, T, U		74				Left
7	55175948	2			74				WEATHERSTRIP, BeltInner
8	55175948	2							SHIM, (NOT SERVICED)
9	55175838	2			74				MOLDING, Rear Door Frame UprUpper
10	55235791AA	2			74				WEATHERSTRIP, B Pillar Secondary

CHEROKEE (XJ)

SERIES	LINE	BODY	ENGINE	TRANSMISSION
L = LOWLINE	T = JEEP - 2WD B = JEEP - 2WD (RHD) J = JEEP - 4WD U = JEEP - 4WD (RHD)	72 = SPORT UTILITY 2-DR 74 = SPORT UTILITY 4-DR	ENC = 2.5L 4 Cyl Turbo Diesel Engine EPB = 2.5L 4 Cylinder Engine EPE = Engine - 2.5L Power Tech I-4 Cyl. ERH = 4.0L Power Tech I-6 Engine	DDQ = 5-Speed Manual Transmission DGS = 4-Speed Automatic AW4 Transmission DGO = ALL AUTOMATIC TRANSMISSIONS DBB = ALL MANUAL TRANSMISSIONS

Group - EXJ

Exterior Ornamentation

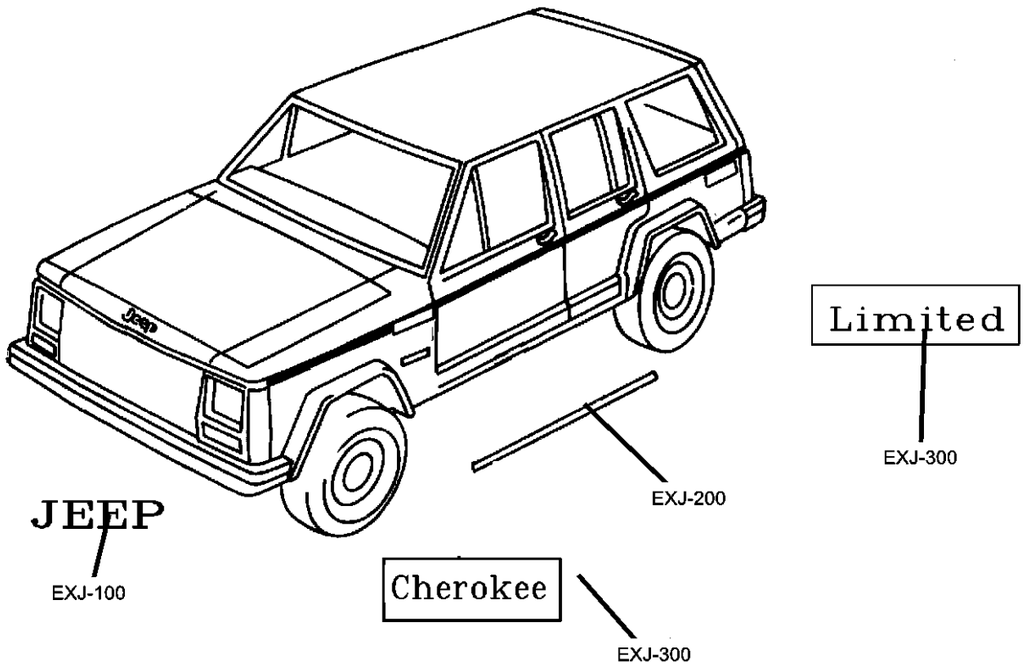

EXJ-100 Nameplates	EXJ-200 Moldings and Ornamentation	EXJ-300 Decals and Tapestripes	
 		4X4 	

Group - EXJ Exterior Ornamentation

Illustration Title — Group-Fig. No.

Nameplates
Nameplates ..... Fig. EXJ - 110

Moldings and Ornamentation
Moldings Body Side ..... Fig. EXJ - 215

Decals and Tapestripes
Decals ..... Fig. EXJ - 310

Nameplates
Figure EXJ-110

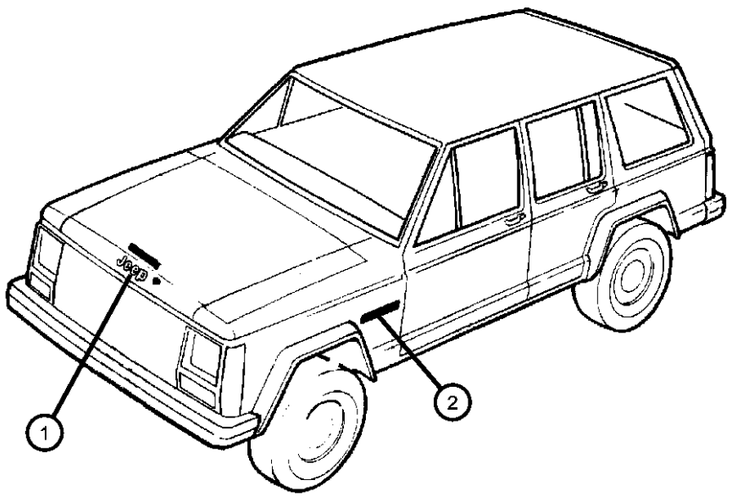

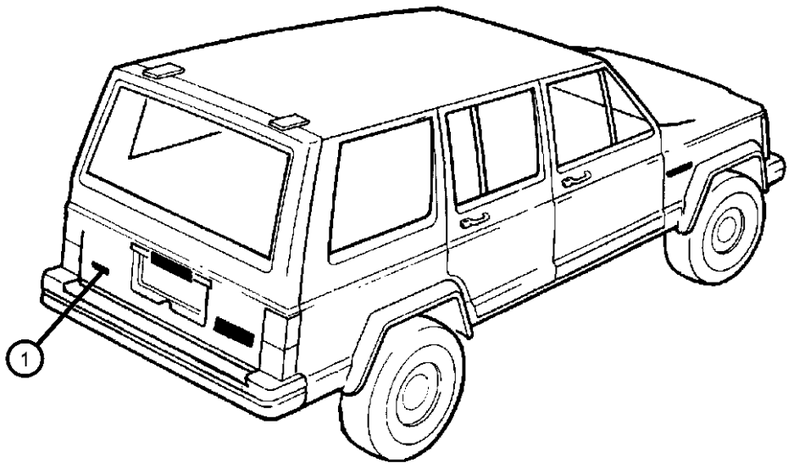

ITEM	PART NUMBER	QTY	LINE	SERIES	BODY	ENGINE	TRANS	TRIM	DESCRIPTION
1									NAMEPLATE, Jeep
	5EM87SA1	2							Silver
	5EM87TD8	2							Quartz
2									DECAL, Cherokee
	5FJ57CA1	2							Silver
	5FJ57HD8	2							Quartz

CHEROKEE (XJ)

SERIES	LINE	BODY	ENGINE	TRANSMISSION
L = LOWLINE	T = JEEP - 2WD B = JEEP - 2WD (RHD) J = JEEP - 4WD U = JEEP - 4WD (RHD)	72 = SPORT UTILITY 2-DR 74 = SPORT UTILITY 4-DR	ENC = 2.5L 4 Cyl Turbo Diesel Engine EPB = 2.5L 4 Cylinder Engine EPE = Engine - 2.5L Power Tech I-4 Cyl. ERH = 4.0L Power Tech I-6 Engine	DDQ = 5-Speed Manual Transmission DGS = 4-Speed Automatic AW4 Transmission DGO = ALL AUTOMATIC TRANSMISSIONS DBB = ALL MANUAL TRANSMISSIONS

AR = use ase required - = Non illustrrated part

Moldings Body Side
Figure EXJ-215

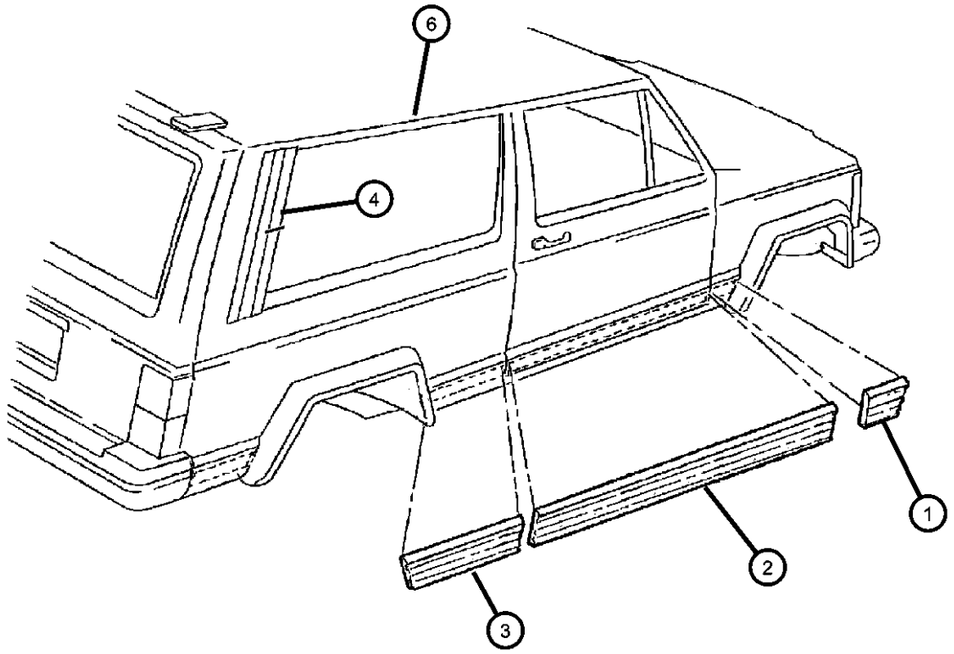

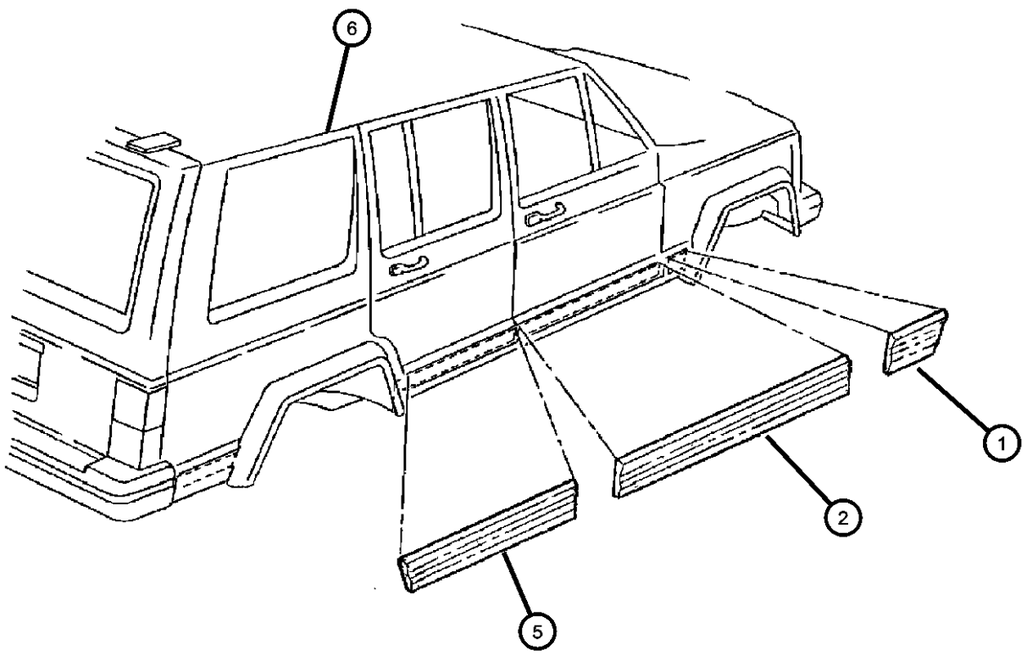

ITEM	PART NUMBER	QTY	LINE	SERIES	BODY	ENGINE	TRANS	TRIM	DESCRIPTION
1									MOLDING, Fender
	5DY12DX9AB	1							w/o Country Package, Right
	5DY13DX9AB	1							w/o Country Package, Left
	5EM46DX8AB	1							Black w/Country Package, Right
	5EM46PCJAB	1							Dark Blue w/Country Package, Right
	5EM46PR4AB	1							Red w/Country Package, Right
	5EM46RJNAB	1							Green w/Country Package, Right
	5EM46SW1AB	1							White w/Country Package, Right
	5EM46TQ7AB	1							Aquamarine Blue w/Country Package, Right
	5EM47DX8AB	1							Black w/Country Package, Left
	5EM47PCJAB	1							Dark Blue w/Country Package, Left
	5EM47PR4AB	1							Red w/Country Package, Left
	5EM47RJNAB	1							Green w/Country Package, Left
	5EM47SW1AB	1							White w/Country Package, Left
	5EM47TQ7AB	1							Aquamarine Blue w/Country package, Left
2									MOLDING, Front Door
	5DY14DX9AB	1			72				w/o Country Package, Right
	5DY15DX9AB	1			72				w/o Country Package, Left
	5DY16DX9AB	1			74				w/o Country Package, Right
	5DY17DX9AB	1			74				w/o Country Package, Left
	5EM56PCJAB	1			74				Dark Blue w/Country Package, Right
	5EM56PR4AB	1			74				Red w/Country Package, Right
	5EM56RJNAB	1			74				Green w/Country Package, Right
	5EM56SW1AB	1			74				White w/Country Package, Right
	5EM56TQ7AB	1			74				Aquamarine Blue w/Country Package, Right
	5EM57DX8AB	1			74				Black w/Country Package, Left
	5EM57PCJAB	1			74				Dark Blue w/Country Package, Left
	5EM57PR4AB	1			74				Red w/Country Package, Left
	5EM57RJNAB	1			74				Green w/Country Package, Left
	5EM57SW1AB	1			74				White w/Country Package, Left

CHEROKEE (XJ)

SERIES	LINE	BODY	ENGINE	TRANSMISSION
L = LOWLINE	T = JEEP - 2WD B = JEEP - 2WD (RHD) J = JEEP - 4WD U = JEEP - 4WD (RHD)	72 = SPORT UTILITY 2-DR 74 = SPORT UTILITY 4-DR	ENC = 2.5L 4 Cyl Turbo Diesel Engine EPB = 2.5L 4 Cylinder Engine EPE = Engine - 2.5L Power Tech I-4 Cyl. ERH = 4.0L Power Tech I-6 Engine	DDQ = 5-Speed Manual Transmission DGS = 4-Speed Automatic AW4 Transmission DGO = ALL AUTOMATIC TRANSMISSIONS DBB = ALL MANUAL TRANSMISSIONS

Moldings Body Side
Figure EXJ-215

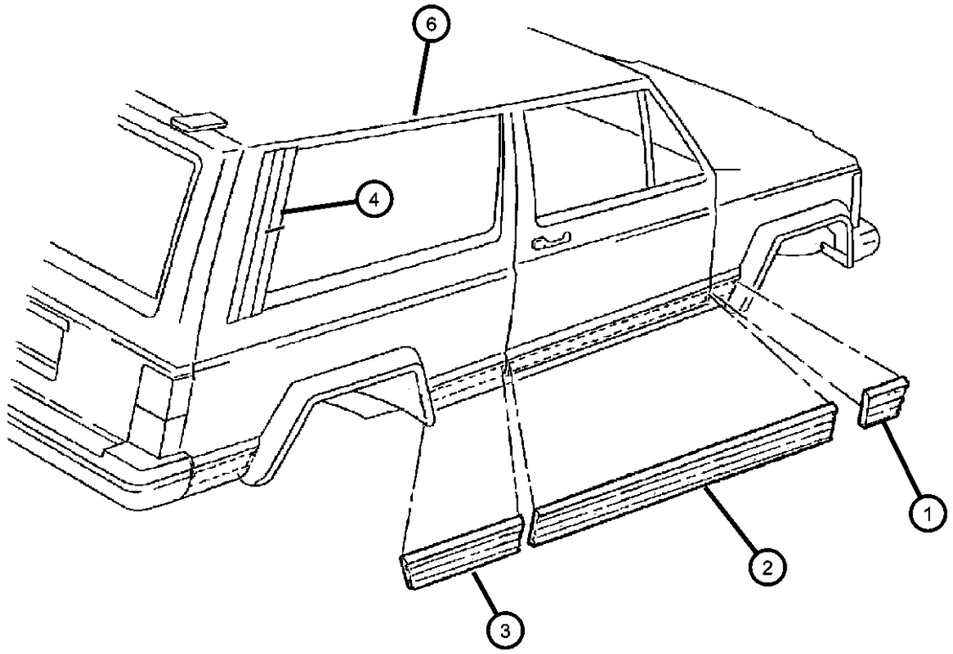

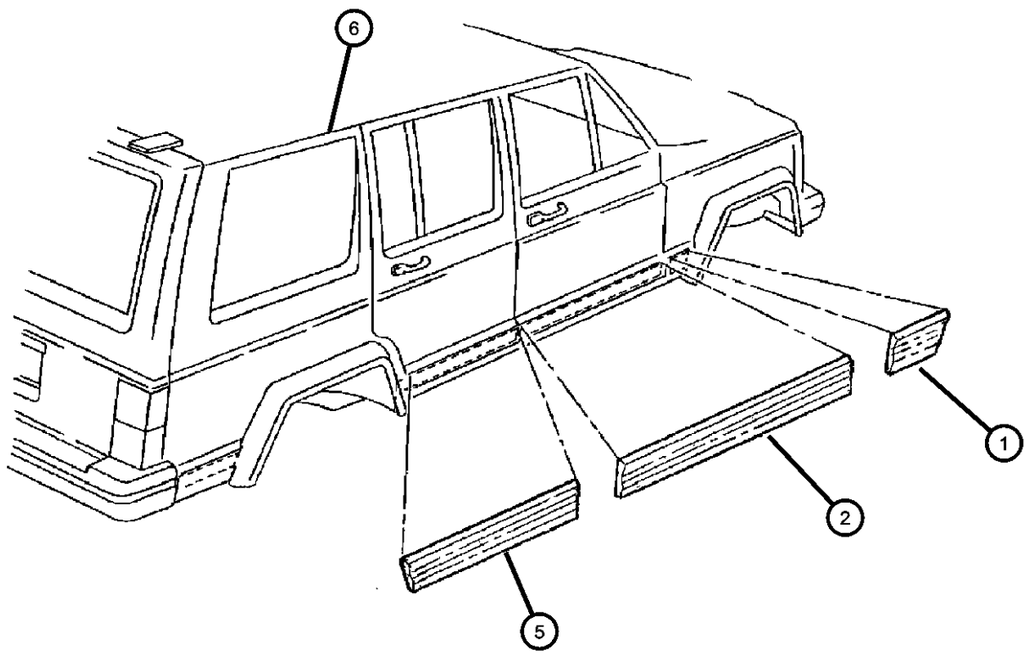

ITEM	PART NUMBER	QTY	LINE	SERIES	BODY	ENGINE	TRANS	TRIM	DESCRIPTION
	5EM57TQ7AB	1			74				Aquamarine Blue w/Country Package, Left
3									MOLDING, Quarter Panel
	5DY26DX9AB	1			72				Right
	5DY27DX9AB	1			72				Left
4									APPLIQUE, Quarter Window
	55025788	1			72				Service Dealer Paint, Right
	55025789	1			72				Service Dealer Paint, Left
5									MOLDING, Rear Door
	5DY18DX9AB	1			74				w/o Country Package, Right
	5DY19DX9AB	1			74				w/o Country Ppackage, Left
	5EM58DX8AB	1			74				Black w/Country Package, Right
	5EM58PCJAB	1			74				Dark Blue w/Country Package, Right
	5EM58PR4AB	1			74				Red w/Country Ppackage, Right
	5EM58RJNAB	1			74				Green w/Country Package, Right
	5EM58SW1AB	1			74				White w/Country Package, Right
	5EM58TQ7AB	1			74				Aquamarine Blue w/Country Package, Right
	5EM59DX8AB	1			74				Black w/Country Package, Left
	5EM59PCJAB	1			74				Dark Blue w/Country Package, Left
	5EM59PR4AB	1			74				Red w/Country Package, Left
	5EM59RJNAB	1			74				Green w/Country Package, Left
	5EM59SW1AB	1			74				White w/Country Package, Left
6									MOLDING, Drip Rail
	55155292	1							Right
	55155293	1							Left
-7	55235518	AR							CLIP, Roof Drip Molding

CHEROKEE (XJ)

SERIES	LINE	BODY	ENGINE	TRANSMISSION
L = LOWLINE	T = JEEP - 2WD B = JEEP - 2WD (RHD) J = JEEP - 4WD U = JEEP - 4WD (RHD)	72 = SPORT UTILITY 2-DR 74 = SPORT UTILITY 4-DR	ENC = 2.5L 4 Cyl Turbo Diesel Engine EPB = 2.5L 4 Cylinder Engine EPE = Engine - 2.5L Power Tech I-4 Cyl. ERH = 4.0L Power Tech I-6 Engine	DDQ = 5-Speed Manual Transmission DGS = 4-Speed Automatic AW4 Transmission DGO = ALL AUTOMATIC TRANSMISSIONS DBB = ALL MANUAL TRANSMISSIONS

Decals
Figure EXJ-310

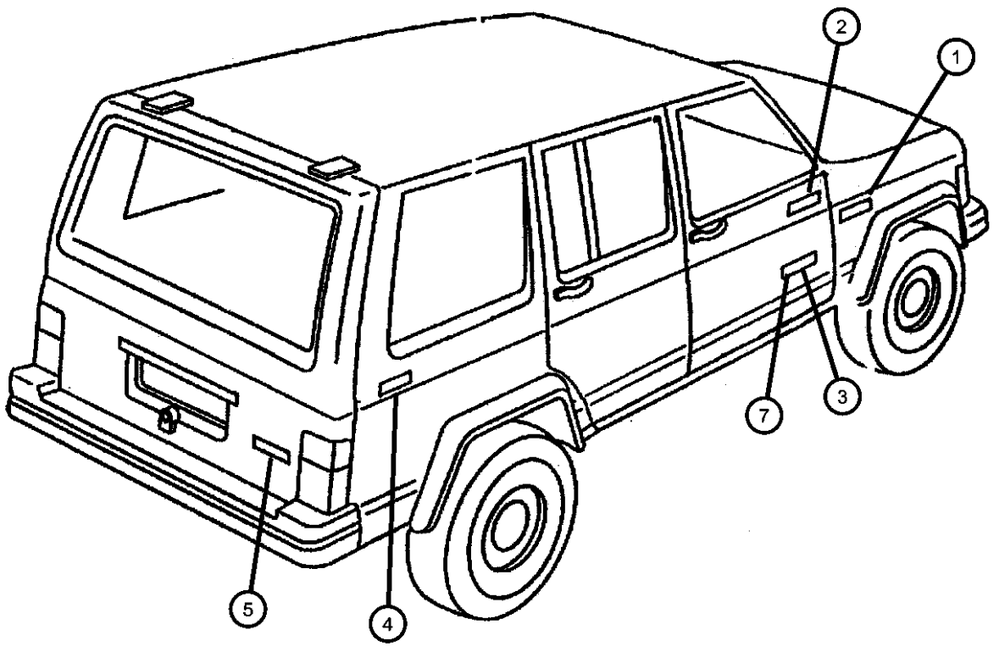

ITEM	PART NUMBER	QTY	LINE	SERIES	BODY	ENGINE	TRANS	TRIM	DESCRIPTION
1									DECAL, Sport
	5FP50RC4	1							Blue, Right
	5FP50SW1	1							White, Right
	5FP51RC4	1							Blue, Left
	5FP51SW1	1							White, Left
2									DECAL, Country
	5EL14CA1	2			74				Silver
	5EL14HD8	2			74				Quartz
3									DECAL, Cherokee
	5FJ57CA1	2							Silver
	5FJ57HD8	2							Quartz
4									DECAL, 4 x 4
	5FJ61CA1	2	J, U						Silver
	5FJ61HD8	2	J, U						Quartz
5									DECAL, 4.0 Litre High Output
	5FJ64CA1	2							Silver
	5FJ64HD8	2							Quartz
-6									DECAL, Liftgate, Turbo Diesel
	5FJ65CA1	1							Silver
	5FJ65HD8	1							Quartz
7									DECAL, Front Door
	5FY13CA1AA	2							‘Cherokee Limited‘, Silver
	5FY13HD8AA	2							‘Cherokee Limited‘, Quartz

CHEROKEE (XJ)

SERIES	LINE	BODY	ENGINE	TRANSMISSION
L = LOWLINE	T = JEEP - 2WD B = JEEP - 2WD (RHD) J = JEEP - 4WD U = JEEP - 4WD (RHD)	72 = SPORT UTILITY 2-DR 74 = SPORT UTILITY 4-DR	ENC = 2.5L 4 Cyl Turbo Diesel Engine EPB = 2.5L 4 Cylinder Engine EPE = Engine - 2.5L Power Tech I-4 Cyl. ERH = 4.0L Power Tech I-6 Engine	DDQ = 5-Speed Manual Transmission DGS = 4-Speed Automatic AW4 Transmission DGO = ALL AUTOMATIC TRANSMISSIONS DBB = ALL MANUAL TRANSMISSIONS

Group - IXJ

Interior Trim

IXJ-100 Headliner and Visor 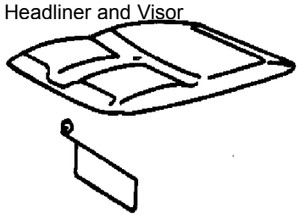	**IXJ-1000** Lift Gate Trim 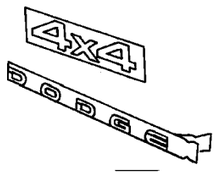	**IXJ-200** Moldings, Scuff Plates 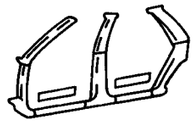	**IXJ-300** Carpet 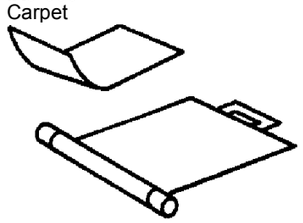
IXJ-400 Door Trim Panels-Front and Rear 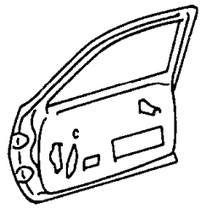	**IXJ-500** Front Seats and Attaching Parts 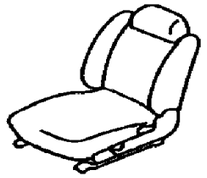	**IXJ-600** Rear Seats and Attaching Parts 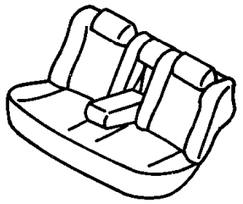	**IXJ-700** Seat Belts-Front and Rear 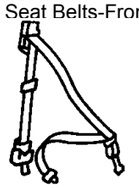
IXJ-800 Adjusters, Covers, Shields, and Risers 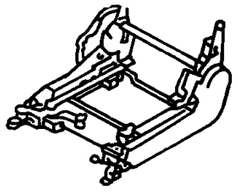			

Group - IXJ Interior Trim

Illustration Title — Group-Fig. No.

Headliner and Visor
Headliner and Upper Trim Moldings ..... Fig. IXJ - 110
Visors and Vanity Mirrors ..... Fig. IXJ - 120

Moldings, Scuff Plates
Panels, Interior Trim, Front ..... Fig. IXJ - 210
Panels, Interior Trim, Rear ..... Fig. IXJ - 215
Panels, Interior Trim, Front ..... Fig. IXJ - 220
Panels, Interior Trim, Rear ..... Fig. IXJ - 225

Carpet
Carpets and Mats ..... Fig. IXJ - 310
Insulation ..... Fig. IXJ - 320
Cover, Cargo ..... Fig. IXJ - 330

Door Trim Panels-Front and Rear
Interior Trim Parts, 2 Door ..... Fig. IXJ - 410
Interior Trim Parts, 4 Door ..... Fig. IXJ - 420

Front Seats and Attaching Parts
Seat Covers and Seat Assemblies ..... Fig. IXJ - 510

Rear Seats and Attaching Parts
Frame and Pad ..... Fig. IXJ - 610
Covers, seat Upholstery ..... Fig. IXJ - 620

Seat Belts-Front and Rear
Seat Belts, Front Seat ..... Fig. IXJ - 710
Seat Belts, Front Seat ..... Fig. IXJ - 720
Seat Belts, Rear Seats ..... Fig. IXJ - 730

Adjusters, Covers, Shields, and Risers
Recliner and Adjuster ..... Fig. IXJ - 810

Lift Gate Trim
Liftgate Trim Panel ..... Fig. IXJ - 1010

Headliner and Upper Trim Moldings
Figure IXJ-110

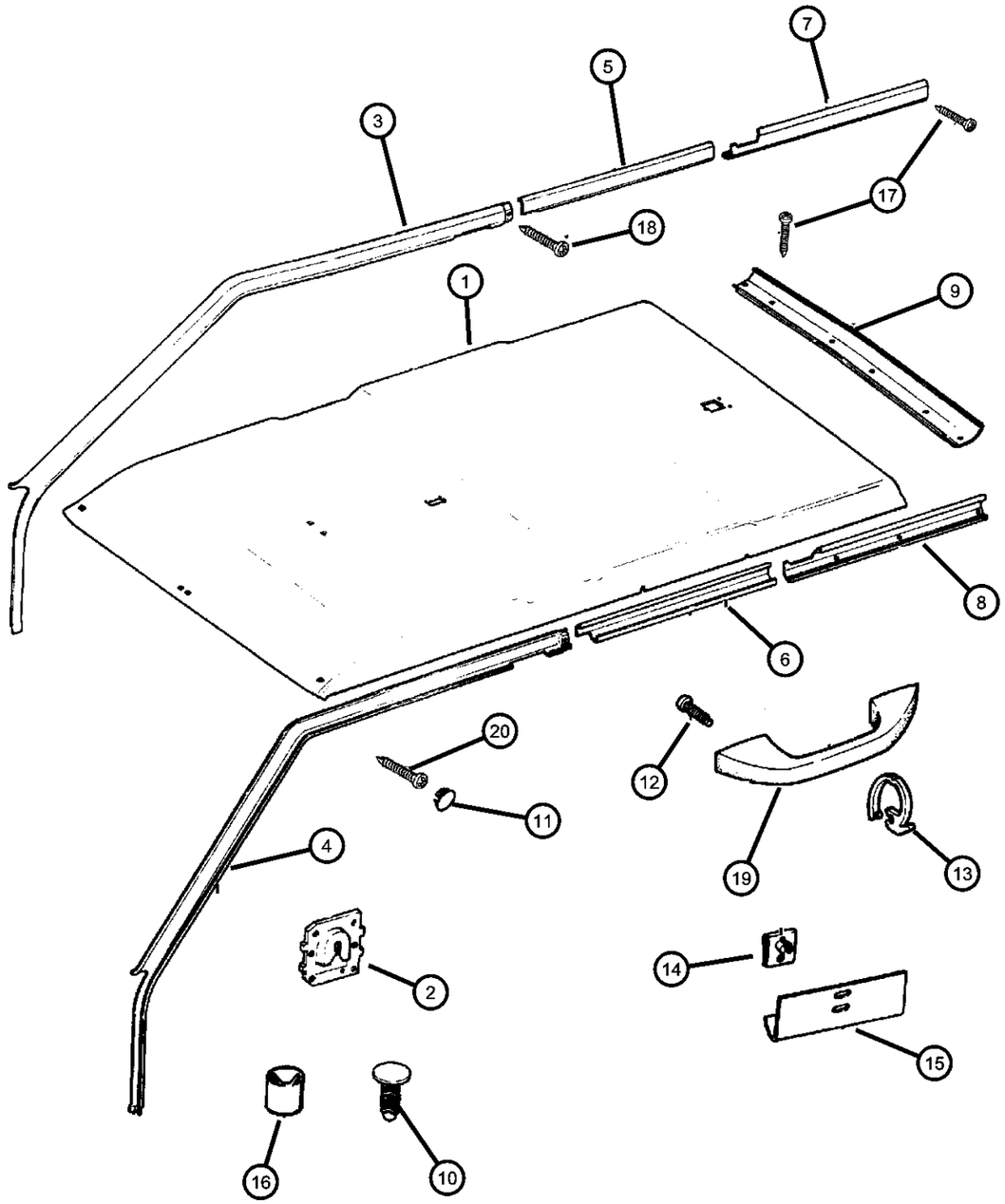

ITEM	PART NUMBER	QTY	LINE	SERIES	BODY	ENGINE	TRANS	TRIM	DESCRIPTION
P.A.R.= Paint As Required									
Sales Codes:									
[RCD] = 4 Speakers									
[RCG] = 8 Speakers Infinity									
1									HEADLINER
	0QB84RC3	1						*O0	[C3], Without [RCD or RCG]
	0QB84RT6	1						*O0	[T6], Without [RCD or RCG]
	5FN42RC3	1						*O0	[C3], With [RCD or RCG]
	5FN42RT6	1						*O0	[T6], With [RCD or RCG]
2	34201299	1			72			*O0	CLIP, Windshield
3									MOLDING, Windshield Garnish
	5EW92RC3AB	1			74			*O0	Mist Gray, Right
	5EW92RT6AB	1			74			*O0	Saddle, Right
	5FF22RC3AB	1			72			*O0	Mist Gray, Right
	5FF22RT6AB	1			72			*O0	Saddle, Right
4									MOLDING, Windshield Garnish
	5EW95RC3AB	1	J, T		74			*O0	Mist Gray, Left
	5EW95RT6AB	1	J, T		74			*O0	Saddle, Left
	5FF05RC3AB	1	B, U		74			*O0	Mist Gray, Left
	5FF05RT6AB	1	B, U		74			*O0	Saddle, Left
	5FF23RC3AB	1	J, T		72			*O0	Mist Gray, Left
	5FF23RT6AB	1	J, T		72			*O0	Saddle, Left
	5FF31RC3AB	1	B, U		72			*O0	Mist Gray, Left
	5FF31RT6AB	1	B, U		72			*O0	Saddle, Left
5	5AC62TT6	1			74			*O0	MOLDING, Headliner, P.A.R., Right
6	5AC63TC3	1			74			*O0	MOLDING, Headliner, P.A.R., Left
7									MOLDING, Headliner
	5AC26TC3	1			74			*O0	P.A.R., Right
	5AD74TC3	1			72			*O0	P.A.R., Right
8									MOLDING, Headliner
	5AC27TC3	1			74			*O0	Paint as Required, Left
	5AD75TC3	1			72			*O0	Paint as Required, Left
9									MOLDING, Liftgate Upper
	5ER43RC3AB	1						*O0	Mist Gray

CHEROKEE (XJ)

SERIES	LINE	BODY	ENGINE	TRANSMISSION
L = LOWLINE	T = JEEP - 2WD B = JEEP - 2WD (RHD) J = JEEP - 4WD U = JEEP - 4WD (RHD)	72 = SPORT UTILITY 2-DR 74 = SPORT UTILITY 4-DR	ENC = 2.5L 4 Cyl Turbo Diesel Engine EPB = 2.5L 4 Cylinder Engine EPE = Engine - 2.5L Power Tech I-4 Cyl. ERH = 4.0L Power Tech I-6 Engine	DDQ = 5-Speed Manual Transmission DGS = 4-Speed Automatic AW4 Transmission DGO = ALL AUTOMATIC TRANSMISSIONS DBB = ALL MANUAL TRANSMISSIONS

Headliner and Upper Trim Moldings
Figure IXJ-110

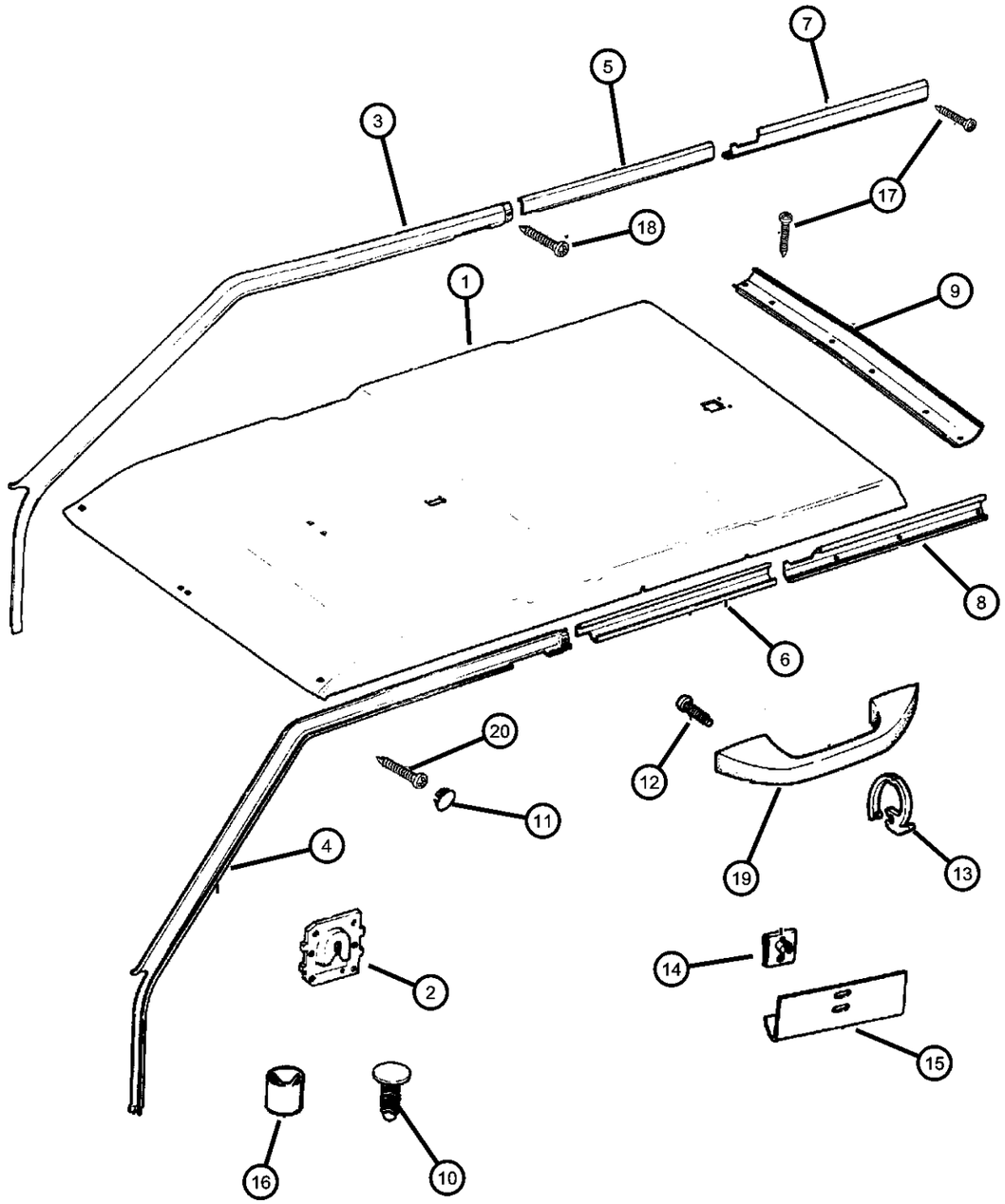

ITEM	PART NUMBER	QTY	LINE	SERIES	BODY	ENGINE	TRANS	TRIM	DESCRIPTION
	5ER43RT6AB	1						*O0	Saddle
10									CLIP, Molding
	34201545	2			74				
		4			72				
11									PLUG, Button
	0AW91TC3	4						*O0	Mist Gray
	0AW91TT6	4						*O0	Saddle
12									SCREW, Pan Head Torx, M5x0.8x30.00
	34202189	6	J, T						
		8	B, U						
13	5AD91TC3	2						*O0	HOOK, Coat, P.A.R.
14	J4000322	2							CLIP, U Type, .625x.719x.020
15	J3681225	2							CLIP, Headliner Mounting
16	55002520	2			72				SPACER, Headliner Molding Rear
17	55002520	2							SCREW, .164-18x.75, (NOT SERVICED)
18	55002520	2							SCREW, Pan Head, .164-18x.75, (NOT SERVICED)
19									HANDLE, Roof Grab
	5CX10TC3	3	J, T					*O0	Mist Gray
		4	B, U					*O0	Mist Gray
	5CX10TT6	3	J, T					*O0	Saddle
		4	B, U					*O0	Saddle
20		4							SCREW, .164-18x.75, (NOT SERVICED),

CHEROKEE (XJ)

SERIES	LINE	BODY	ENGINE	TRANSMISSION
L = LOWLINE	T = JEEP - 2WD B = JEEP - 2WD (RHD) J = JEEP - 4WD U = JEEP - 4WD (RHD)	72 = SPORT UTILITY 2-DR 74 = SPORT UTILITY 4-DR	ENC = 2.5L 4 Cyl Turbo Diesel Engine EPB = 2.5L 4 Cylinder Engine EPE = Engine - 2.5L Power Tech I-4 Cyl. ERH = 4.0L Power Tech I-6 Engine	DDQ = 5-Speed Manual Transmission DGS = 4-Speed Automatic AW4 Transmission DGO = ALL AUTOMATIC TRANSMISSIONS DBB = ALL MANUAL TRANSMISSIONS

Visors and Vanity Mirrors
Figure IXJ-120

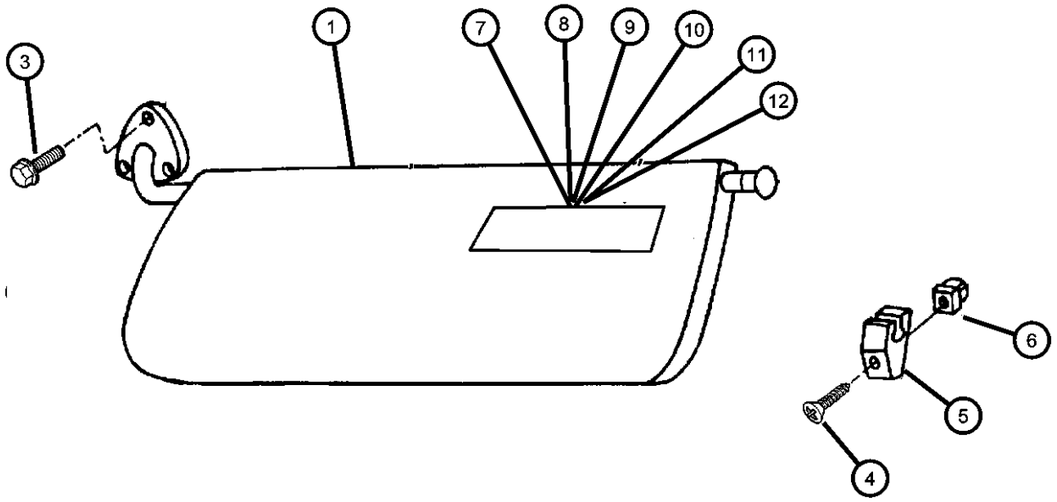

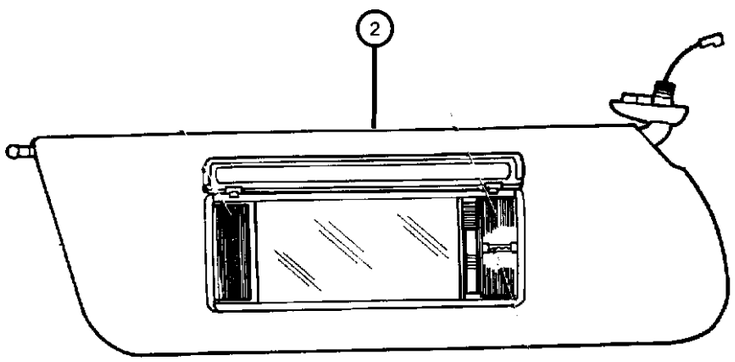

ITEM	PART NUMBER	QTY	LINE	SERIES	BODY	ENGINE	TRANS	TRIM	DESCRIPTION
1									VISOR
	5FX361C3AA	1						*O0	Mist Gray, Up to 2-17-97, Right
	5FX361T6AA	1						*O0	Saddle, Up to 2-17-97, Right
	5FX361C3AB	1						*O0	Mist Gray, After 2-17-97, Right
	5FX361T6AB	1						*O0	Saddle, After 2-17-97, Right
	5FX371C3AA	1						*O0	Mist Gray, Up to 2-17-97, Left
	5FX371T6AA	1						*O0	Saddle, Up to 2-17-97, Left
	5FX371C3AB	1						*O0	Mist Gray, After 2-17-97, Left
	5FX371T6AB	1						*O0	Saddle, After 2-17-97, Left
2									VISOR, Illuminated
	5FX341C3AA	1						*O0	Mist Gray, 2-17-97, Right
	5FX341T6AA	1						*O0	Saddle, Up to 2-17-97, Right
	5FX341C3AB	1						*O0	Mist Gray, After 2-17-97, Right
	5FX341T6AB	1						*O0	Saddle, After 2-17-97, Right
	5FX351C3AA	1						*O0	Mist Gray, 2-17-97, Left
	5FX351T6AA	1						*O0	Saddle, Up to 2-17-97, Left
	5FX351C3AB	1						*O0	Mist Gray, After 2-17-97, Left
	5FX351T6AB	1						*O0	Saddle, After 2-17-97, Left
3	11501150	6							SCREW, Oval Head Tapping, .164x18x.984
4	34201398	2							SCREW AND WASHER, Oval Truss Head, .164-18x.984
5	0DF49TC3	2						*O0	CLIP, Visor, Mist Gray
6	J4005242	2							NUT, Push
7	52008712	1							LABEL, Anti-lock Brake Operation
8									LABEL, Closed Body Warning
	55009558	1	J, U						
		1	J, T						
9									LABEL, Transfer Case Shift
	53008695	1	J, U						English, With 231
	53008696	1	J, U						Bilangual, With 231
	53009357	1	J, U						English, With 242
	53009358	1	J, U						Bilangual, With 242
10	52006337	1							LABEL, Diesel Starting, English

CHEROKEE (XJ)

SERIES	LINE	BODY	ENGINE	TRANSMISSION
L = LOWLINE	T = JEEP - 2WD B = JEEP - 2WD (RHD) J = JEEP - 4WD U = JEEP - 4WD (RHD)	72 = SPORT UTILITY 2-DR 74 = SPORT UTILITY 4-DR	ENC = 2.5L 4 Cyl Turbo Diesel Engine EPB = 2.5L 4 Cylinder Engine EPE = Engine - 2.5L Power Tech I-4 Cyl. ERH = 4.0L Power Tech I-6 Engine	DDQ = 5-Speed Manual Transmission DGS = 4-Speed Automatic AW4 Transmission DGO = ALL AUTOMATIC TRANSMISSIONS DBB = ALL MANUAL TRANSMISSIONS

Visors and Vanity Mirrors
Figure IXJ-120

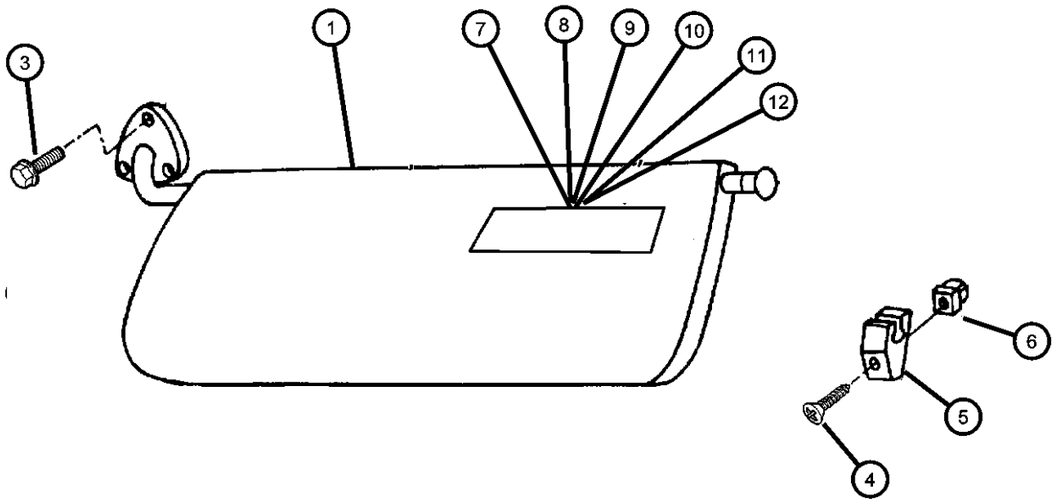

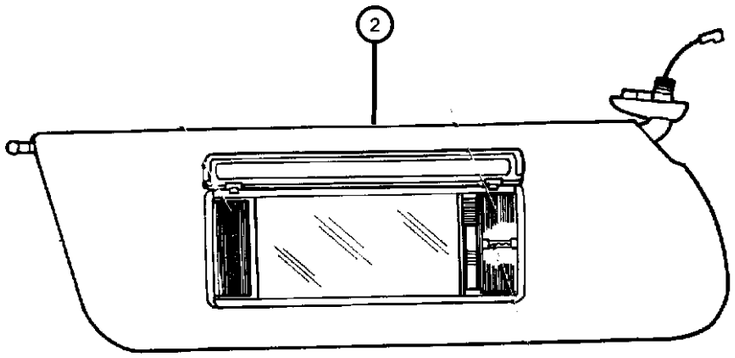

ITEM	PART NUMBER	QTY	LINE	SERIES	BODY	ENGINE	TRANS	TRIM	DESCRIPTION
11	04787437AA	2	J, T						LABEL, Air Bag Warning, English and French, 5 Points
12	55196783AA	2	J, T						LABEL, Airbag, Bi-Lingual

CHEROKEE (XJ)

SERIES	LINE	BODY	ENGINE	TRANSMISSION
L = LOWLINE	T = JEEP - 2WD B = JEEP - 2WD (RHD) J = JEEP - 4WD U = JEEP - 4WD (RHD)	72 = SPORT UTILITY 2-DR 74 = SPORT UTILITY 4-DR	ENC = 2.5L 4 Cyl Turbo Diesel Engine EPB = 2.5L 4 Cylinder Engine EPE = Engine - 2.5L Power Tech I-4 Cyl. ERH = 4.0L Power Tech I-6 Engine	DDQ = 5-Speed Manual Transmission DGS = 4-Speed Automatic AW4 Transmission DGO = ALL AUTOMATIC TRANSMISSIONS DBB = ALL MANUAL TRANSMISSIONS

Panels, Interior Trim, Front
Figure IXJ-210

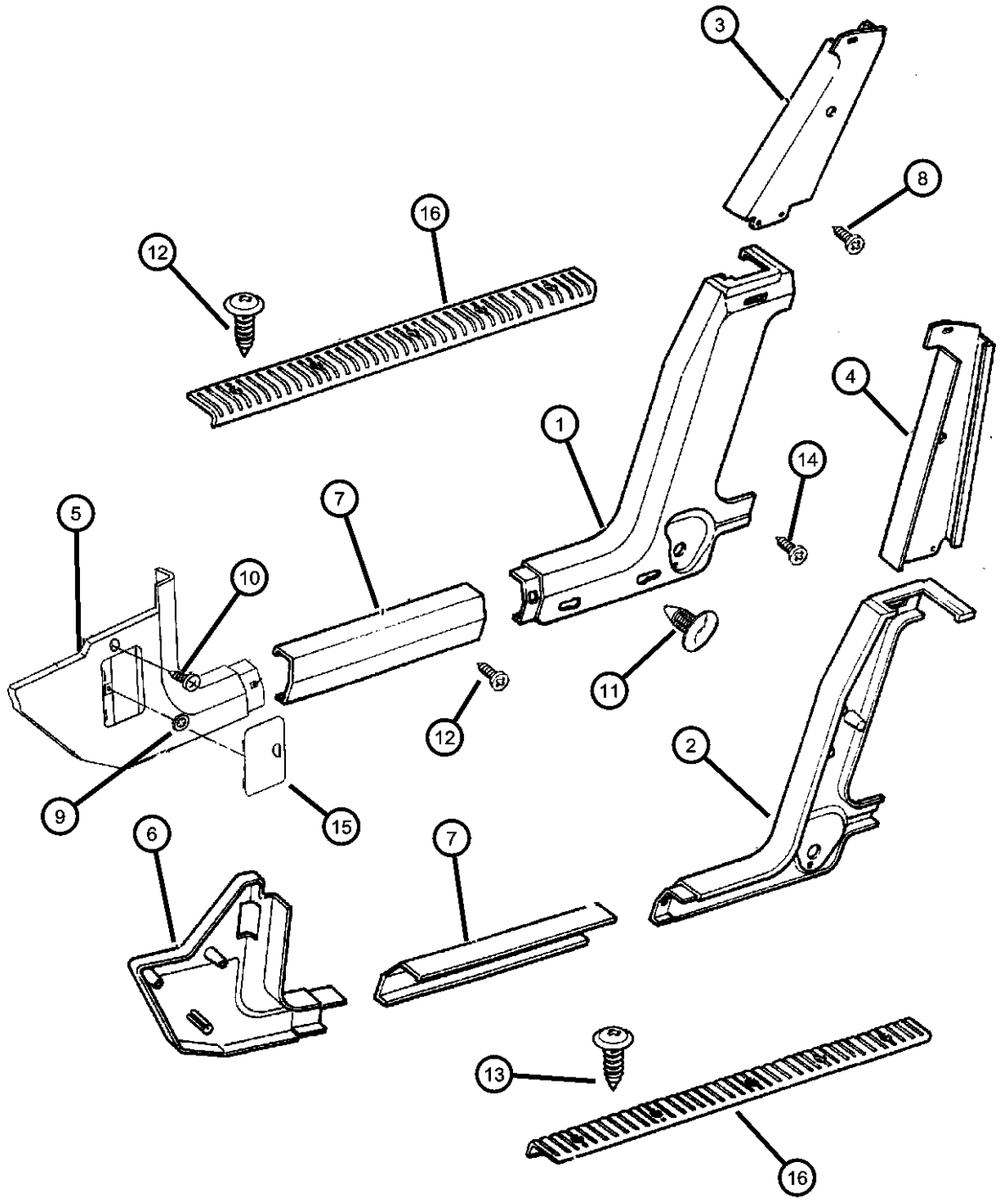

ITEM	PART NUMBER	QTY	LINE	SERIES	BODY	ENGINE	TRANS	TRIM	DESCRIPTION
P.A.R.= Paint As Required									
1	5EW90TC3	1			72			*O0	EXTENSION, B Pillar, P.A.R., Right
2	5EW91TC3	1			72			*O0	EXTENSION, B Pillar, P.A.R., Left
3									COVER, Lock Pillar
	5ER16RC3	1			72			*O0	Mist Gray, Right
	5ER16RT6	1			72			*O0	Saddle, Right
4									COVER, Lock Pillar
	5ER17RC3	1			72			*O0	Mist Gray, Left
	5ER17RT6	1			72			*O0	Saddle, Left
5									PANEL, Cowl Side Trim
	5EG14RC3AB	1						*O0	Mist Gray, Right
	5EG14RT6AB	1						*O0	Saddle, Right
6									PANEL, Cowl Side Trim
	5EG17RC3AB	1	J, T					*O0	Mist Gray, Left
	5EG17RT6AB	1	J, T					*O0	Saddle, Left
	5ES93RC3AB	1	B, U					*O0	Mist Gray, Left
	5ES93RT6AB	1	B, U					*O0	Saddle, Left
7									PLATE, Scuff
	5EW78TC3	1			72			*O0	Mist Gray, Right
	5EW78TT6	1			72			*O0	Saddle, Right
	5EW79TC3	1			72			*O0	Mist Gray, Left
	5EW79TT6	1			72			*O0	Saddle, Left
8	34201314	4						*O0	SCREW, Tapping Round Head, .164x18x1.232
9	06033560	1							NUT AND WASHER, Hex Nut-Coned Washer, .25-20
10	06033560	1							SCREW AND WASHER, Pan Head, .19-16x1, (NOT SERVICED)
11	34201545	4			72				CLIP, Molding
12	34201545	4							SCREW, Pan Head, .164-18x1.25, (NOT SERVICED)
13	34201545	4							SCREW, .164-18x.500, (NOT SERVICED)
14	34201400	2			72				SCREW AND FINISH WASHER, Oval Head TR, 40mm Long
15									DOOR, Fuse Acess
	5FU34RC3	1						*O0	Mist Gray

CHEROKEE (XJ)

SERIES	LINE	BODY	ENGINE	TRANSMISSION
L = LOWLINE	T = JEEP - 2WD B = JEEP - 2WD (RHD) J = JEEP - 4WD U = JEEP - 4WD (RHD)	72 = SPORT UTILITY 2-DR 74 = SPORT UTILITY 4-DR	ENC = 2.5L 4 Cyl Turbo Diesel Engine EPB = 2.5L 4 Cylinder Engine EPE = Engine - 2.5L Power Tech I-4 Cyl. ERH = 4.0L Power Tech I-6 Engine	DDQ = 5-Speed Manual Transmission DGS = 4-Speed Automatic AW4 Transmission DGO = ALL AUTOMATIC TRANSMISSIONS DBB = ALL MANUAL TRANSMISSIONS

Panels, Interior Trim, Front
Figure IXJ-210

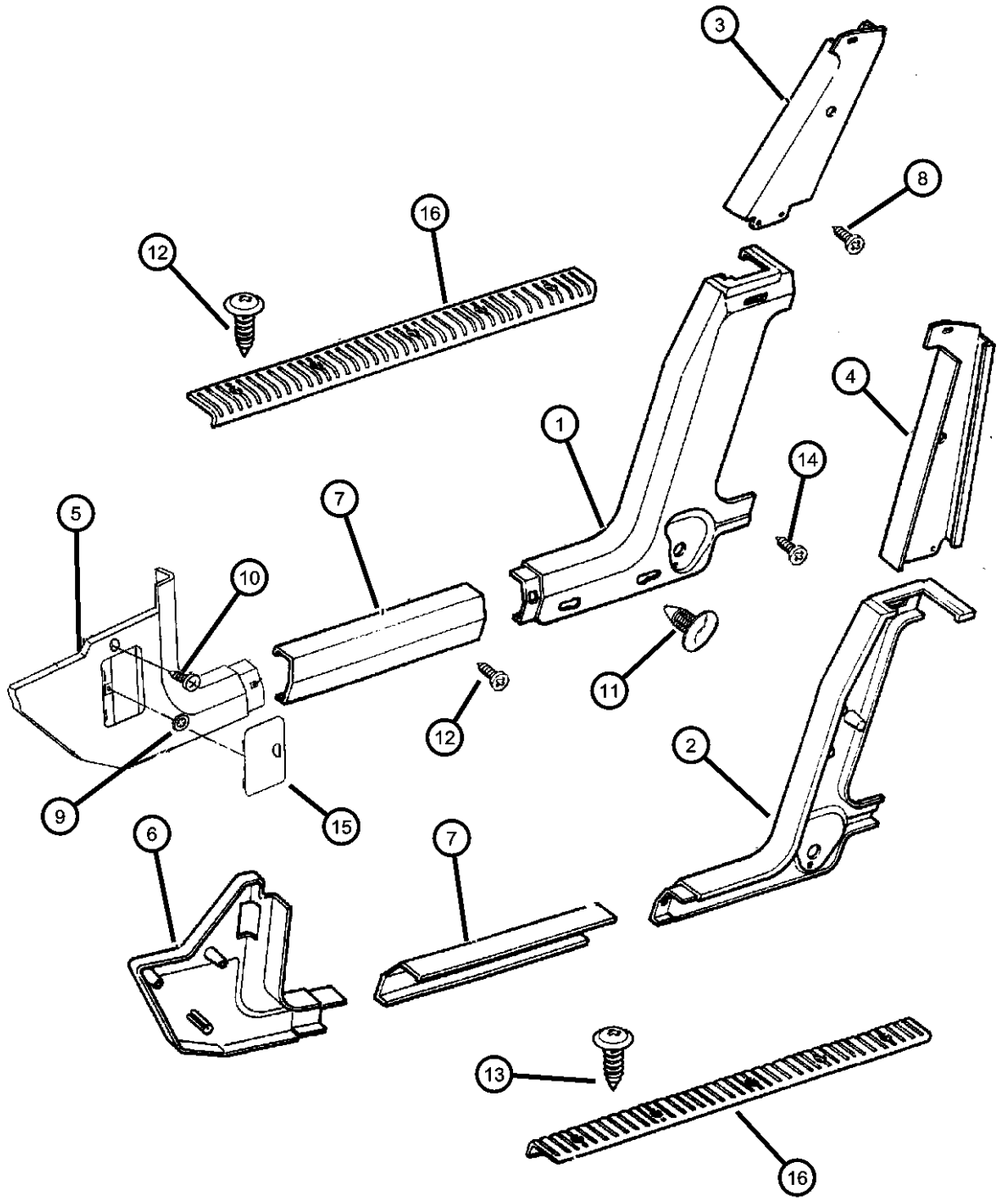

ITEM	PART NUMBER	QTY	LINE	SERIES	BODY	ENGINE	TRANS	TRIM	DESCRIPTION
	5FU34RT6	1						*O0	Saddle
16	55003374	2			72				PLATE, Scuff

CHEROKEE (XJ)

SERIES	LINE	BODY	ENGINE	TRANSMISSION
L = LOWLINE	T = JEEP - 2WD B = JEEP - 2WD (RHD) J = JEEP - 4WD U = JEEP - 4WD (RHD)	72 = SPORT UTILITY 2-DR 74 = SPORT UTILITY 4-DR	ENC = 2.5L 4 Cyl Turbo Diesel Engine EPB = 2.5L 4 Cylinder Engine EPE = Engine - 2.5L Power Tech I-4 Cyl. ERH = 4.0L Power Tech I-6 Engine	DDQ = 5-Speed Manual Transmission DGS = 4-Speed Automatic AW4 Transmission DGO = ALL AUTOMATIC TRANSMISSIONS DBB = ALL MANUAL TRANSMISSIONS

AR = use ase required - = Non illustrrated part

Panels, Interior Trim, Rear
Figure IXJ-215

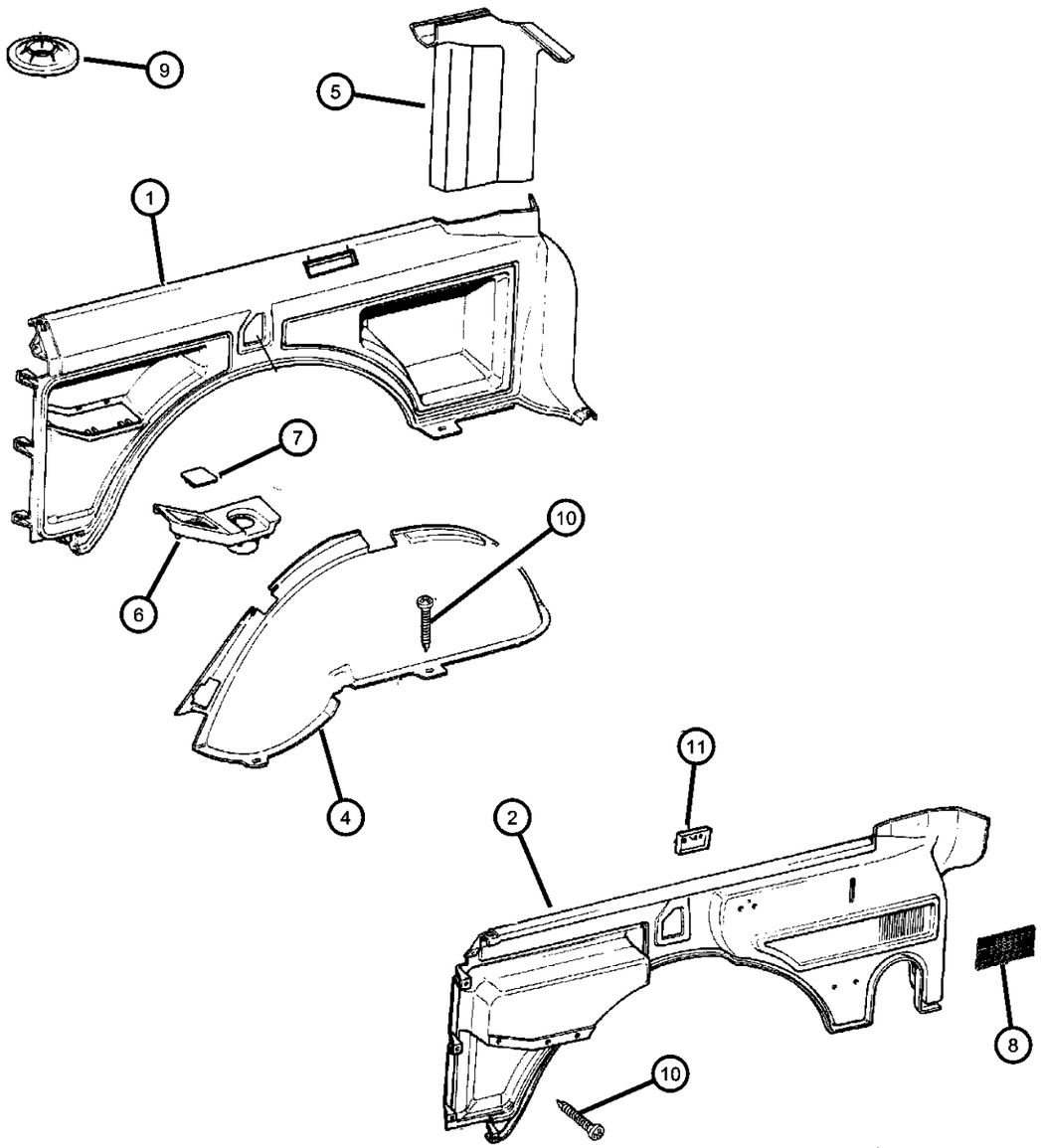

ITEM	PART NUMBER	QTY	LINE	SERIES	BODY	ENGINE	TRANS	TRIM	DESCRIPTION
P.A.R.= Paint As Required									
1									PANEL, Quarter Trim
	5EG04RC3	1			72			*O0	Mist Gray, Right
	5EG04RT6	1			72			*O0	Saddle, Right
2									PANEL, Quarter Trim
	5EG05RC3AF	1			72			*O0	Mist Gray, Left
	5EG05RT6AF	1			72			*O0	Saddle, Left
-3									PIN, Push .281
	5AA35TC3	1						*O0	Mist Gray
	5AA35TT6	1						*O0	Saddle
4									PANEL, Wheelhouse
	5AC58TC3	1						*O0	Mist Gray, Right
	5AC58TT6	1						*O0	Saddle, Right
	5AC59TC3	1						*O0	Mist Gray, Left
	5AC59TT6	1						*O0	Saddle, Left
5									COVER, Liftgate Pillar
	5ER40RT6	1			72			*O0	P.A.R., Right
	5ER41RT6	1			72			*O0	P.A.R., Left
6	5ER41RT6	1							COVER, Armrest, Serviced in Quarter Trim Panel, (NOT SERVICED),
7									COVER, Ash Receiver Opening
	5AC64TC3	2			72			*O0	Mist Gray
	5AC64TT6	2			72			*O0	Saddle
8	55004406	1			72			*O0	SCREEN, Louvre
9	34201481	6			72			*O0	NUT, Push On
10	34201468	4							SCREW, Round Washer Head, M4.2x1.41x25.00
11	34201468	4							REST, Spare Tire, (NOT SERVICED)

CHEROKEE (XJ)

SERIES	LINE	BODY	ENGINE	TRANSMISSION
L = LOWLINE	T = JEEP - 2WD B = JEEP - 2WD (RHD) J = JEEP - 4WD U = JEEP - 4WD (RHD)	72 = SPORT UTILITY 2-DR 74 = SPORT UTILITY 4-DR	ENC = 2.5L 4 Cyl Turbo Diesel Engine EPB = 2.5L 4 Cylinder Engine EPE = Engine - 2.5L Power Tech I-4 Cyl. ERH = 4.0L Power Tech I-6 Engine	DDQ = 5-Speed Manual Transmission DGS = 4-Speed Automatic AW4 Transmission DGO = ALL AUTOMATIC TRANSMISSIONS DBB = ALL MANUAL TRANSMISSIONS

Panels, Interior Trim, Front
Figure IXJ-220

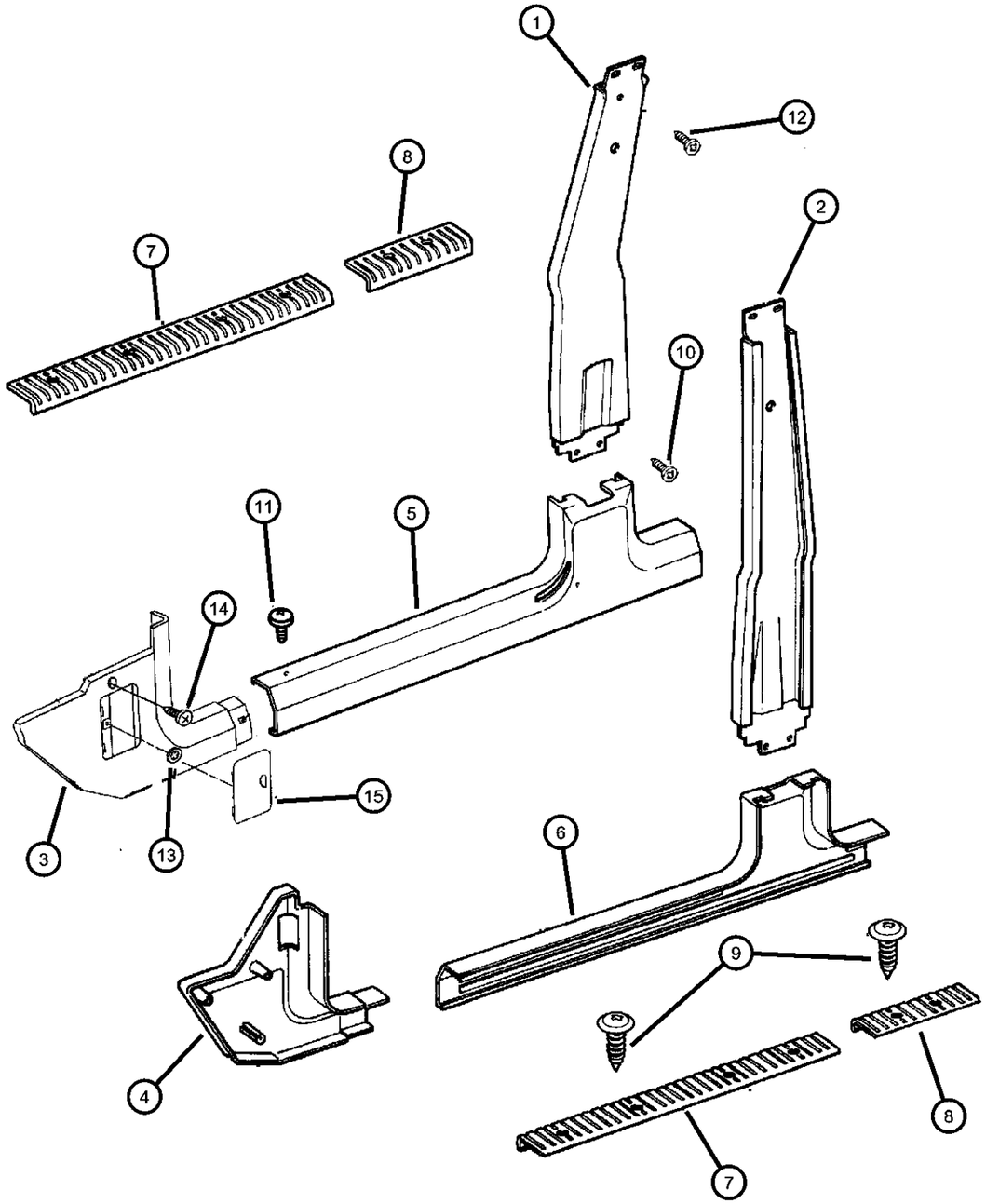

ITEM	PART NUMBER	QTY	LINE	SERIES	BODY	ENGINE	TRANS	TRIM	DESCRIPTION
P.A.R.= Paint As Required									
1	5ER20RT6	1			74			*O0	COVER, B Pillar Trim Panel, P.A.R., Right
2	5ER21RT6	1			74			*O0	COVER, B Pillar Trim Panel, P.A.R., Left
3									PANEL, Cowl Side Trim
	5EG14RC3AB	1						*O0	Mist Gray, Right
	5EG14RT6AB	1						*O0	Saddle, Right
4									PANEL, Cowl Side Trim
	5EG17RC3AB	1	J, T					*O0	Mist Gray, Left
	5EG17RT6AB	1	J, T					*O0	Saddle, Left
	5ES93RC3AB	1	B, U					*O0	Mist Gray, Left
	5ES93RT6AB	1	B, U					*O0	Saddle, Left
5									COVER, B Pillar Trim Panel
	5EW80TC3	1			74			*O0	Mist Gray, Right
	5EW80TT6	1			74			*O0	Saddle, Right
6									COVER, B Pillar Trim Panel
	5EW81TC3	1			74			*O0	Mist Gray, Left
	5EW81TT6	1			74			*O0	Saddle, Left
7	55003370	2			74				PLATE, ScuffFront
8	55003372	2			74				PLATE, ScuffRear
9	55003372	2							SCREW, .164-18x.500, (NOT SERVICED)
10	34201545	2			74				CLIP, Molding
11	34201400	10			74				SCREW AND FINISH WASHER, Oval Head TR, 40mm Long
12	34201314	4						*O0	SCREW, Tapping Round Head, .164x18x1.232
13	06033560	1							NUT AND WASHER, Hex Nut-Coned Washer, .25-20
14	34201468	2							SCREW, Round Washer Head, M4.2x1.41x25.00
15									DOOR, Fuse Acess
	5FU34RC3	1						*O0	Mist Gray
	5FU34RT6	1						*O0	Saddle

CHEROKEE (XJ)

SERIES	LINE	BODY	ENGINE	TRANSMISSION
L = LOWLINE	T = JEEP - 2WD B = JEEP - 2WD (RHD) J = JEEP - 4WD U = JEEP - 4WD (RHD)	72 = SPORT UTILITY 2-DR 74 = SPORT UTILITY 4-DR	ENC = 2.5L 4 Cyl Turbo Diesel Engine EPB = 2.5L 4 Cylinder Engine EPE = Engine - 2.5L Power Tech I-4 Cyl. ERH = 4.0L Power Tech I-6 Engine	DDQ = 5-Speed Manual Transmission DGS = 4-Speed Automatic AW4 Transmission DGO = ALL AUTOMATIC TRANSMISSIONS DBB = ALL MANUAL TRANSMISSIONS

Panels, Interior Trim, Rear
Figure IXJ-225

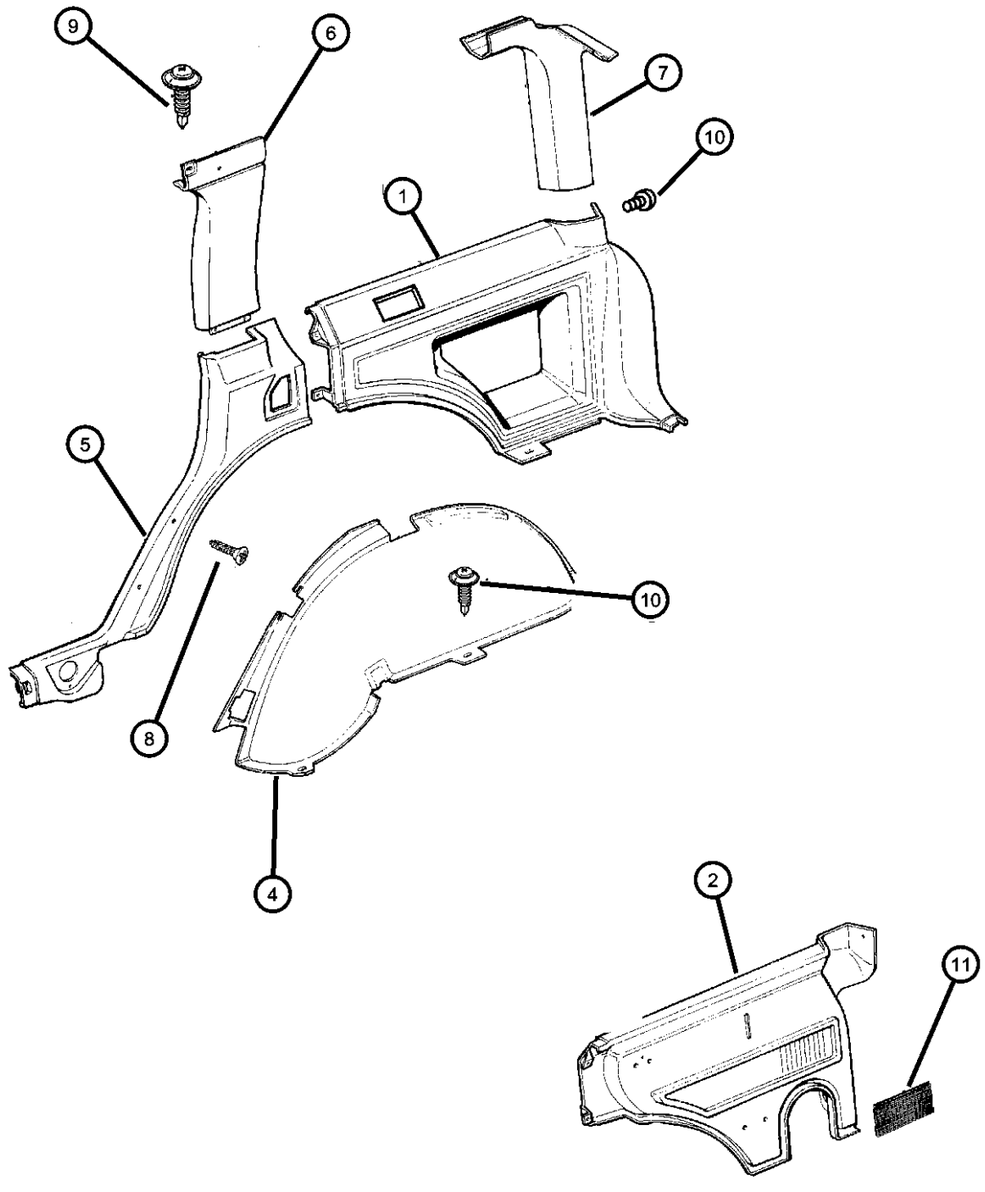

ITEM	PART NUMBER	QTY	LINE	SERIES	BODY	ENGINE	TRANS	TRIM	DESCRIPTION
P.A.R.= Paint As Required									
1									PANEL, Quarter Trim
	5EG02RC3AB	1			74			*O0	Mist Gray, Up To 2-7-97, Right
	5EG02RT6AB	1			74			*O0	Saddle, Up To 2-7-97, Right
	5EG02RC3AC	1			74			*O0	Mist Gray, After 2-7-97, Right
	5EG02RT6AC	1			74			*O0	Saddle, After 2-7-97, Right
2									PANEL, Quarter Trim
	5EG03RC3AG	1			74			*O0	Mist Gray, Left
	5EG03RT6AG	1			74			*O0	Saddle, Left
-3									PIN, Push .281
	5AA35TC3	1						*O0	Mist Gray
	5AA35TT6	1						*O0	Saddle
4									PANEL, Wheelhouse
	5AC58TC3	1						*O0	Mist Gray, Right
	5AC58TT6	1						*O0	Saddle, Right
	5AC59TC3	1						*O0	Mist Gray, Left
	5AC59TT6	1						*O0	Saddle, Left
5									EXTENSION, C Pillar
	5EW88RC3AB	1			74			*O0	Mist Gray, Right
	5EW88RT6AB	1			74			*O0	Saddle, Right
	5EW89RC3AB	1			74			*O0	Mist Gray, Left
	5EW89RT6AB	1			74			*O0	Saddle, Left
6									COVER, C Pillar
	5EW86TC3	1			74			*O0	P.A.R., Right
	5EW87TC3	1			74			*O0	P.A.R., Left
7									COVER, Liftgate
	5FX18RC3AB	1			74			*O0	Mist Gray, Up To 2-7-97, Right
	5FX18RT6AB	1			74			*O0	Saddle, Up To 2-7-97, Right
	5FX18RC3AC	1			74			*O0	Mist Gray, After 2-7-97, Right
	5FX18RT6AC	1			74			*O0	Saddle, After 2-7-97, Right
	5FX19RC3AB	1			74			*O0	Mist Gray, Up To 2-7-97, Left
	5FX19RT6AB	1			74			*O0	Saddle, Up To 2-7-97, Left
	5FX19RC3AC	1			74			*O0	Mist Gray, After 2-7-97, Left

CHEROKEE (XJ)

SERIES	LINE	BODY	ENGINE	TRANSMISSION
L = LOWLINE	T = JEEP - 2WD B = JEEP - 2WD (RHD) J = JEEP - 4WD U = JEEP - 4WD (RHD)	72 = SPORT UTILITY 2-DR 74 = SPORT UTILITY 4-DR	ENC = 2.5L 4 Cyl Turbo Diesel Engine EPB = 2.5L 4 Cylinder Engine EPE = Engine - 2.5L Power Tech I-4 Cyl. ERH = 4.0L Power Tech I-6 Engine	DDQ = 5-Speed Manual Transmission DGS = 4-Speed Automatic AW4 Transmission DGO = ALL AUTOMATIC TRANSMISSIONS DBB = ALL MANUAL TRANSMISSIONS

Panels, Interior Trim, Rear
Figure IXJ-225

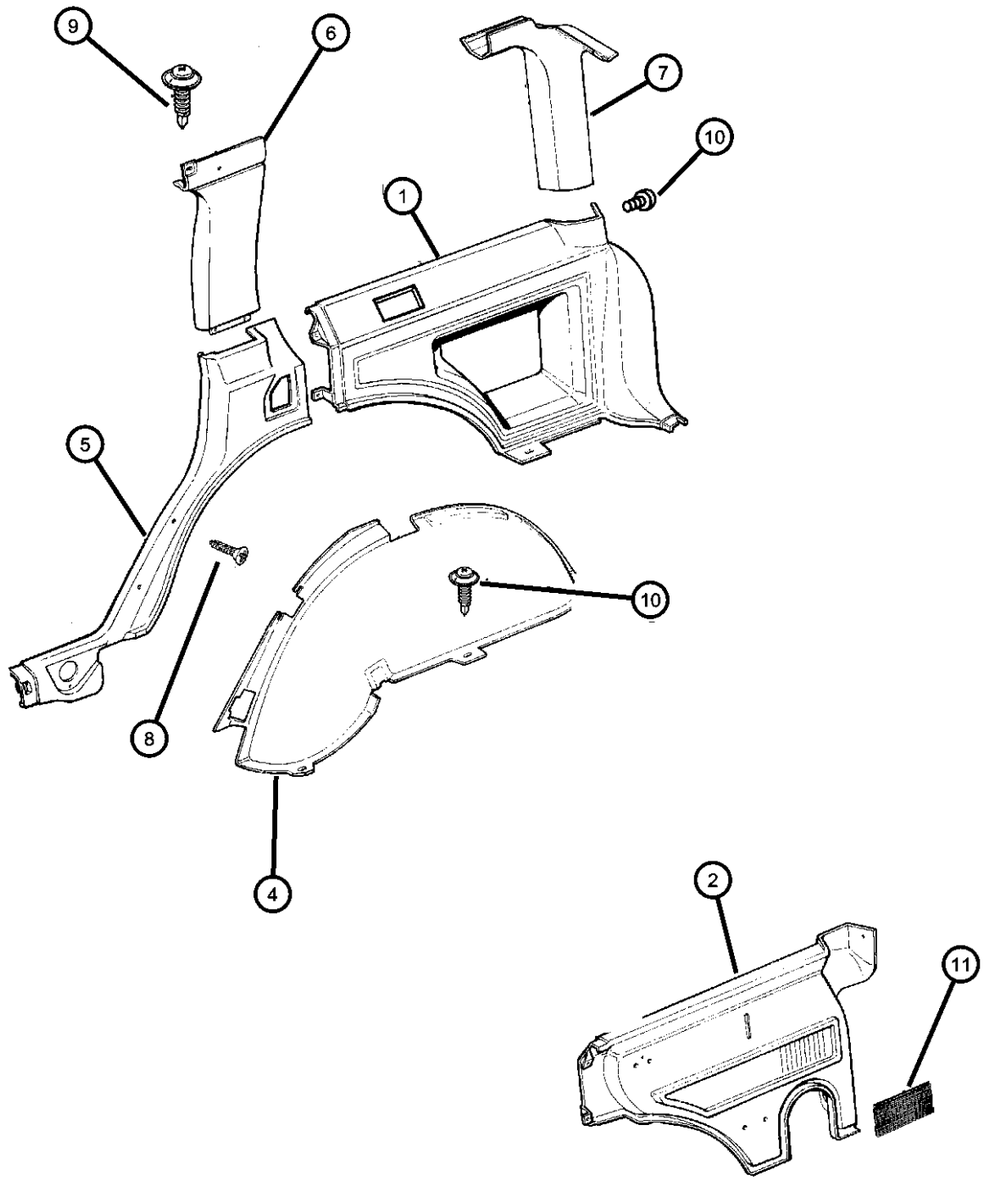

ITEM	PART NUMBER	QTY	LINE	SERIES	BODY	ENGINE	TRANS	TRIM	DESCRIPTION
	5FX19RT6AC	1			74			*O0	Saddle, After 2-7-97, Left
8	34201545	4			74				CLIP, Molding
9	34201314	6						*O0	SCREW, Tapping Round Head, .164x18x1.232
10	34201468	4							SCREW, Round Washer Head, M4.2x1.41x25.00
11	55004406	1			74			*O0	SCREEN, Louvre

CHEROKEE (XJ)

SERIES	LINE	BODY	ENGINE	TRANSMISSION
L = LOWLINE	T = JEEP - 2WD B = JEEP - 2WD (RHD) J = JEEP - 4WD U = JEEP - 4WD (RHD)	72 = SPORT UTILITY 2-DR 74 = SPORT UTILITY 4-DR	ENC = 2.5L 4 Cyl Turbo Diesel Engine EPB = 2.5L 4 Cylinder Engine EPE = Engine - 2.5L Power Tech I-4 Cyl. ERH = 4.0L Power Tech I-6 Engine	DDQ = 5-Speed Manual Transmission DGS = 4-Speed Automatic AW4 Transmission DGO = ALL AUTOMATIC TRANSMISSIONS DBB = ALL MANUAL TRANSMISSIONS

Carpets and Mats
Figure IXJ-310

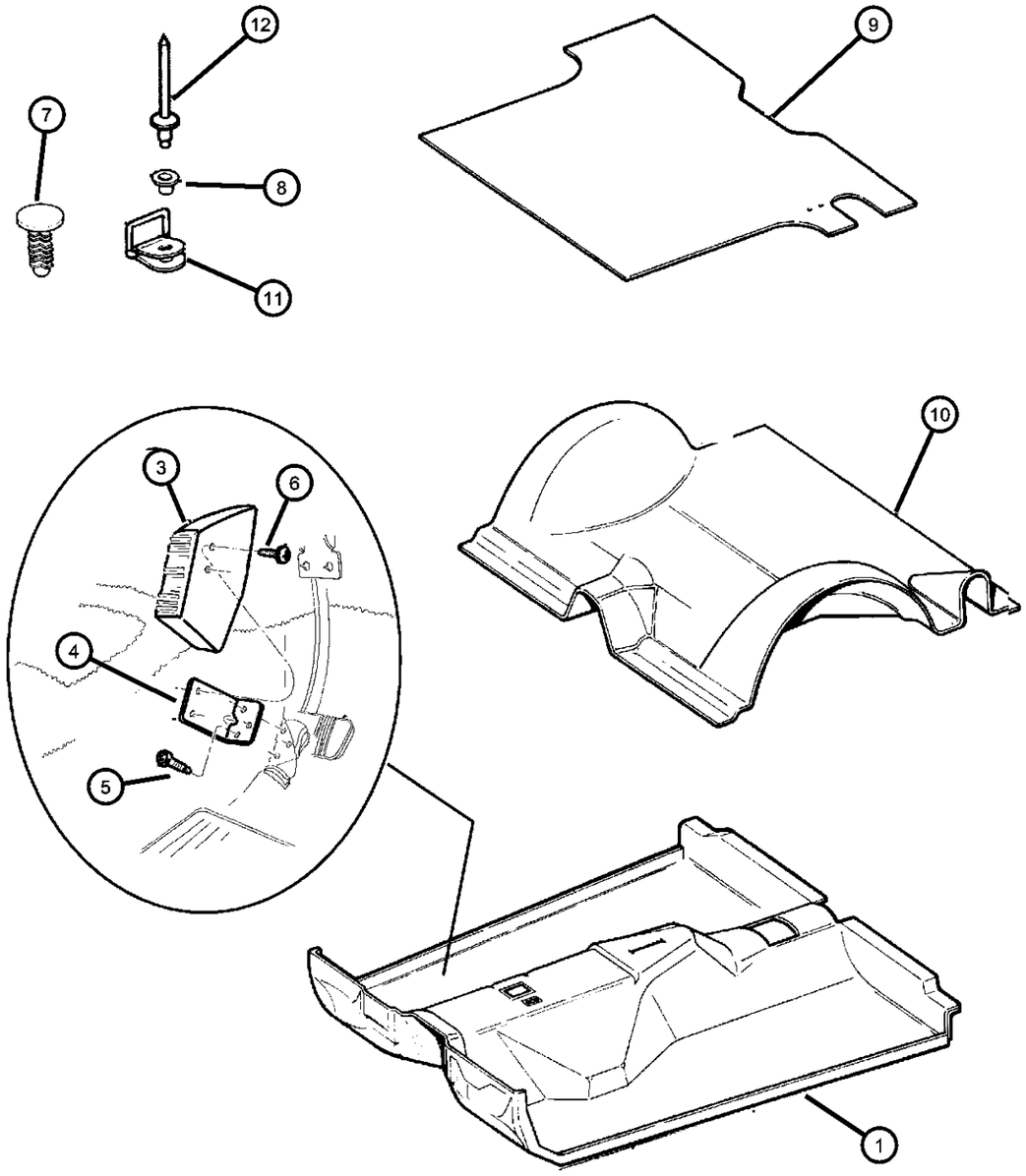

ITEM	PART NUMBER	QTY	LINE	SERIES	BODY	ENGINE	TRANS	TRIM	DESCRIPTION
1									CARPET, Floor
	5EY16RC3AE	1	J, T					*O0	Mist Gray, Gas Only
	5EY16RT6AE	1	J, T					*O0	Saddle, Gas Only
	5FM05RC3AC	1	B, U					*O0	Mist Gray
	5FM05RT6AC	1	B, U					*O0	Saddle
	5FY03RC3AC	1	J, T					*O0	Mist Gray, Diesel
	5FY03RT6AC	1	J, T					*O0	Saddle, Diesel
-2									MAT, Full Floor, Rubber
	5FM11DX9AB	1	B, U					*O0	Black
	5FN10DX9AC	1	J, T					*O0	Black
3	55115066	1	B, U						PAD, Foot Rest
4	55115067	1	B, U						BRACKET, Foot Rest
5	55115067	1							SCREW, .190-16x.625, (NOT SERVICED)
6	55115067	1							SCREW, .190-16x1.00, (NOT SERVICED)
7									PIN, Push .281
	5AA35TC3	1						*O0	Mist Gray
	5AA35TT6	1						*O0	Saddle
8	34202365	4							WASHER
9	55008727	1							MAT, FloorCargo Compartment
10									CARPET, Cargo Floor
	5FX14RC3	1						*O0	Mist Gray
	5FX14RT6	1						*O0	Saddle
11	55215609	4							LOOP, Cargo Tie Down
12	06035122	4							RIVET, .187x.70 Black
-13	34202672	2							RIVET, .197 Grip-.187-.375, Carpet Attach
-14									MAT, Floor
	5FJ35RC3	1	B, U					*O0	Mist Gray
	5FJ35RT6	1	B, U					*O0	Saddle

CHEROKEE (XJ)

SERIES	LINE	BODY	ENGINE	TRANSMISSION
L = LOWLINE	T = JEEP - 2WD B = JEEP - 2WD (RHD) J = JEEP - 4WD U = JEEP - 4WD (RHD)	72 = SPORT UTILITY 2-DR 74 = SPORT UTILITY 4-DR	ENC = 2.5L 4 Cyl Turbo Diesel Engine EPB = 2.5L 4 Cylinder Engine EPE = Engine - 2.5L Power Tech I-4 Cyl. ERH = 4.0L Power Tech I-6 Engine	DDQ = 5-Speed Manual Transmission DGS = 4-Speed Automatic AW4 Transmission DGO = ALL AUTOMATIC TRANSMISSIONS DBB = ALL MANUAL TRANSMISSIONS

Insulation
Figure IXJ-320

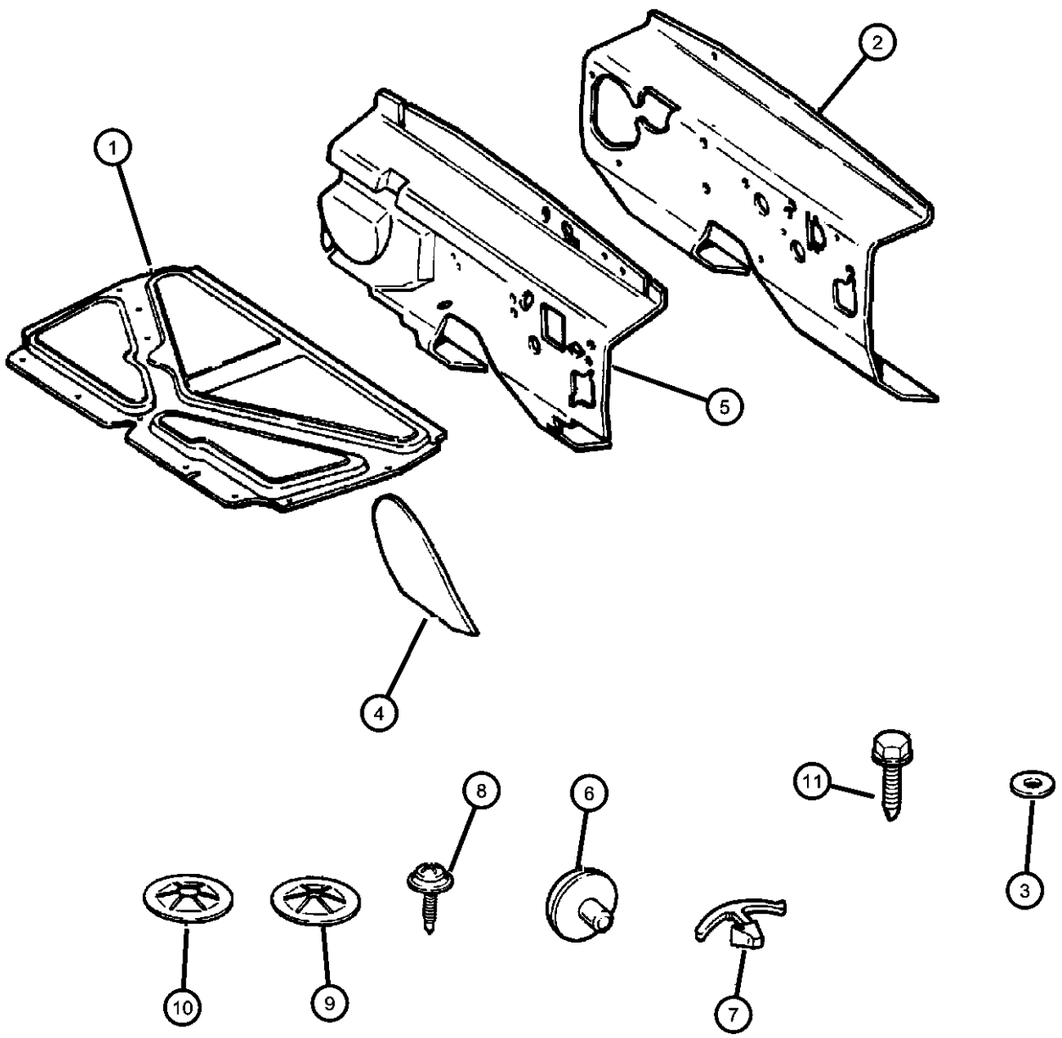

ITEM	PART NUMBER	QTY	LINE	SERIES	BODY	ENGINE	TRANS	TRIM	DESCRIPTION
1	55217068AC	1							INSULATION, Hood
2	55217409	1	J, T						INSULATION, Dash PanelInner
3	11500323	4							WASHER, Flat
4	55004230	1							INSULATION, Toe Board
5	55352647AA	1	J						INSULATION, Dash PanelOuter
6	J3081054	7							CLIP, Silencer, Insulation to Dash
7	06003351	13							RETAINER, Hood Insulation, .415x.690
8	06035156	2							SCREW, Flat Head, .312-18x1.00
9	J4005955	4	J, T						NUT, Hood Insulation , Diesel Engine
10	J4000235	2							NUT, Push, .375, Insulation to Accelerator Stud
11	J4000235	2							SCREW, Flat Head, .312-18x1.00, Attach Insulation to Dash Panel, (NOT SERVICED)

CHEROKEE (XJ)

SERIES	LINE	BODY	ENGINE	TRANSMISSION
L = LOWLINE	T = JEEP - 2WD B = JEEP - 2WD (RHD) J = JEEP - 4WD U = JEEP - 4WD (RHD)	72 = SPORT UTILITY 2-DR 74 = SPORT UTILITY 4-DR	ENC = 2.5L 4 Cyl Turbo Diesel Engine EPB = 2.5L 4 Cylinder Engine EPE = Engine - 2.5L Power Tech I-4 Cyl. ERH = 4.0L Power Tech I-6 Engine	DDQ = 5-Speed Manual Transmission DGS = 4-Speed Automatic AW4 Transmission DGO = ALL AUTOMATIC TRANSMISSIONS DBB = ALL MANUAL TRANSMISSIONS

Cover, Cargo
Figure IXJ-330

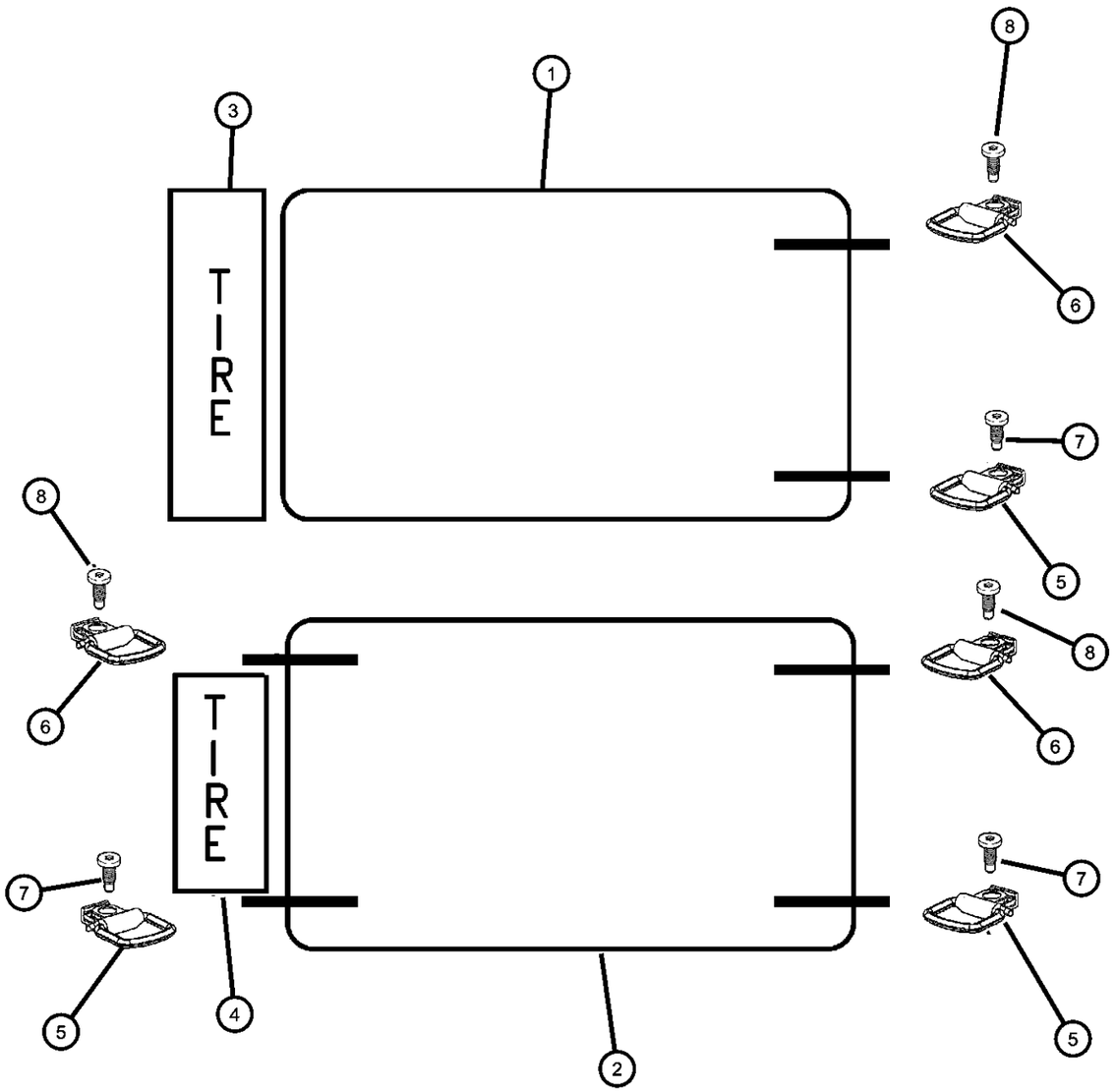

ITEM	PART NUMBER	QTY	LINE	SERIES	BODY	ENGINE	TRANS	TRIM	DESCRIPTION
1									COVER, Cargo Compartment
	5FX86RC3AA	1						*O0	Mist Gray, Full Spare
	5FX86RT6AA	1						*O0	Saddle, Full Spare
	5FX87RC3AA	1	J, U					*O0	Mist Gray, With Compact Spare T155/90D16-Full
	5FX87RT6AA	1	J, U					*O0	Saddle, With Compact Spare T155/90D16-Full
2									COVER, Cargo Compartment
	5FX84RC3AA	1	J, T					*O0	Mist Gray, Mini-Spare
	5FX84RT6AA	1	J, T					*O0	Saddle, Mini-Spare
3									COVER, Spare Tire
	5FX76RC3AA	1	J, U					*O0	Mist Gray, With Compact Spare T155/90D16-Full
	5FX76RT6AA	1	J, U					*O0	Saddle, With Compact Spare T155/90D16-Full
	5FX79RC3AA	1						*O0	Mist Gray, Full Spare
	5FX79RT6AA	1						*O0	Saddle, Full Spare
4									COVER, Inside Spare Tire
	5FM74TC3	1						*O0	Mist Gray, Mini-Spare
	5FM74TT6	1						*O0	Saddle, Mini-Spare
5	55352692AA	1	B, J						LOOP, Cargo Tie DownFront
6	55352697AA	1	B, J						LOOP, Cargo Tie DownRear
7	34201400	2			72				SCREW AND FINISH WASHER, Oval Head TR, 40mm Long
8	34201400	2							SCREW DRILL, Oval Truss Head, .164x18x1.378, (NOT SERVICED)

CHEROKEE (XJ)

SERIES	LINE	BODY	ENGINE	TRANSMISSION
L = LOWLINE	T = JEEP - 2WD B = JEEP - 2WD (RHD) J = JEEP - 4WD U = JEEP - 4WD (RHD)	72 = SPORT UTILITY 2-DR 74 = SPORT UTILITY 4-DR	ENC = 2.5L 4 Cyl Turbo Diesel Engine EPB = 2.5L 4 Cylinder Engine EPE = Engine - 2.5L Power Tech I-4 Cyl. ERH = 4.0L Power Tech I-6 Engine	DDQ = 5-Speed Manual Transmission DGS = 4-Speed Automatic AW4 Transmission DGO = ALL AUTOMATIC TRANSMISSIONS DBB = ALL MANUAL TRANSMISSIONS

Interior Trim Parts, 2 Door
Figure IXJ-410

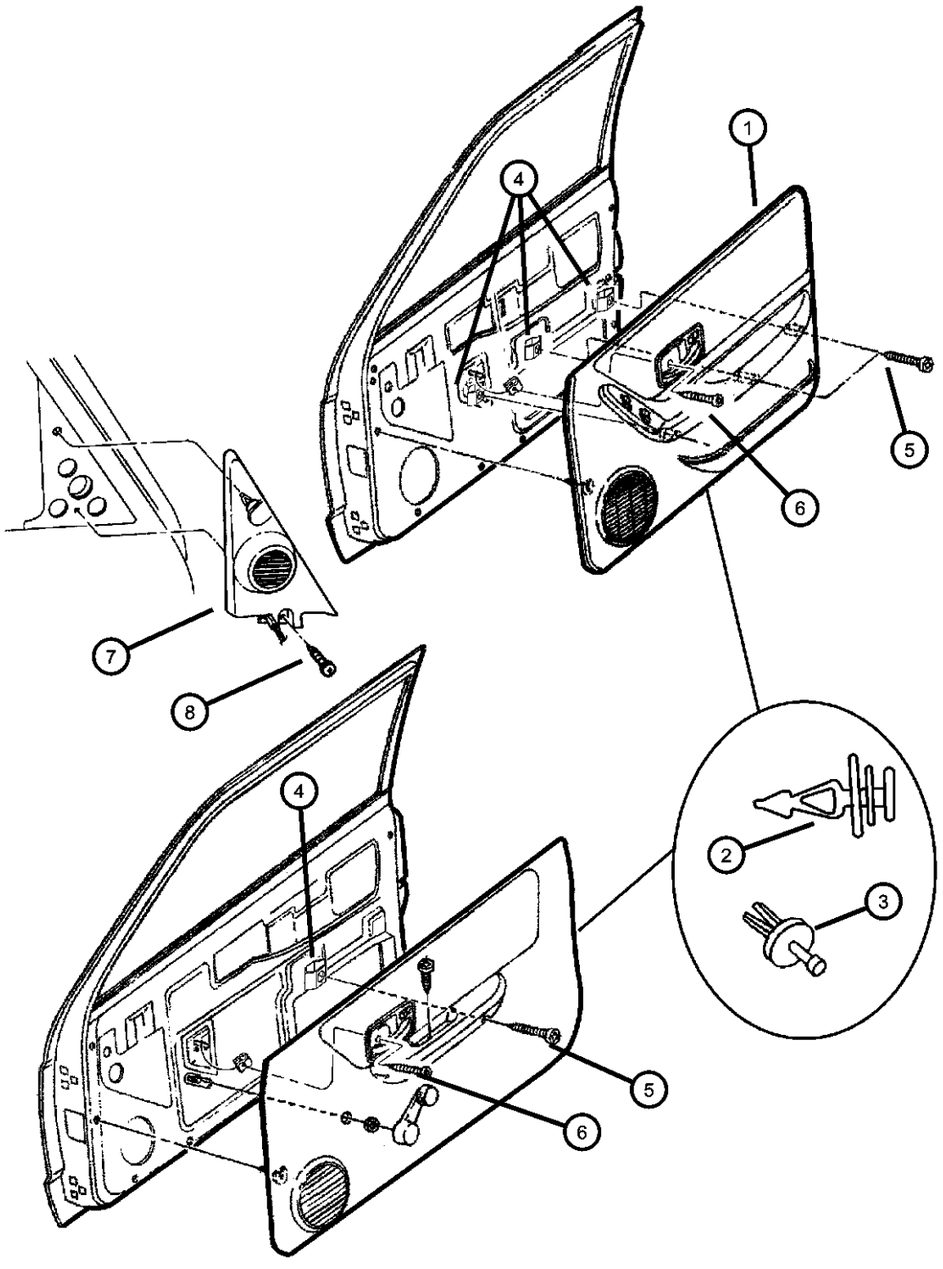

ITEM	PART NUMBER	QTY	LINE	SERIES	BODY	ENGINE	TRANS	TRIM	DESCRIPTION
1									PANEL, Front Door Trim
	0QL601C3	1	J		72			*O0	Mist Gray, Vinyl, With Power, Right
	0QL611C3	1	J		72			*O0	Mist Gray, Vinyl, With Power, Left
	0QL611T6	1	J		72			*O0	Saddle, Vinyl, With Power, Left
	5EH321C3	1	B, U		72			*O0	Mist Gray, Vinyl, Without Power, Right
		1	J, T		72			*O0	Mist Gray, Vinyl, Without Power, Right
	5EH321T6	1	B, U		72			*O0	Saddle, Vinyl, Without Power, Right
		1	J, T		72			*O0	Saddle, Vinyl, Without Power, Right
	5EH331C3	1	J, T		72			*O0	Mist Gray, Vinyl, Without Power, Left
		1	B, U		72			*O0	Mist Gray, Vinyl, Without Power, Left
	5EH331T6	1	J, T		72			*O0	Saddle, Vinyl, Without Power, Left
		1	B, U		72			*O0	Saddle, Vinyl, Without Power, Left
	5EH351C3AB	1	J, T		72			*O0	Mist Gray, With Power Mirrors Only, Left
	5EH351T6AB	1	J, T		72			*O0	Saddle, With Power Mirrors Only, Left
2	06504014	10							FASTENER, Door Trim Panel, White
3	06505009AA	AR							FASTENER, Door Trim Panel, Black
4	06029509	6							U-NUT, .250-14
5	06029509	6							SCREW, .250-14x1.772, (NOT SERVICED)
6	06029509	6							SCREW, M4x0.7-16, (NOT SERVICED)
7									COVER, Mirror Opening
	5FM02RC3	1						*O0	Mist Gray, With 2 or 4 Speaker System, Right
	5FM02RT6	1						*O0	Saddle, With 2 or 4 Speaker System, Right
	5FM03RC3	1						*O0	Mist Gray, With 2 or 4 Speaker System, Left
	5FM03RT6	1						*O0	Saddle, With 2 or 4 Speaker System, Left
	5FV14RC3	1						*O0	Mist Gray, With 6 Speaker System and Tweeter, Right

CHEROKEE (XJ)

SERIES	LINE	BODY	ENGINE	TRANSMISSION
L = LOWLINE	T = JEEP - 2WD B = JEEP - 2WD (RHD) J = JEEP - 4WD U = JEEP - 4WD (RHD)	72 = SPORT UTILITY 2-DR 74 = SPORT UTILITY 4-DR	ENC = 2.5L 4 Cyl Turbo Diesel Engine EPB = 2.5L 4 Cylinder Engine EPE = Engine - 2.5L Power Tech I-4 Cyl. ERH = 4.0L Power Tech I-6 Engine	DDQ = 5-Speed Manual Transmission DGS = 4-Speed Automatic AW4 Transmission DGO = ALL AUTOMATIC TRANSMISSIONS DBB = ALL MANUAL TRANSMISSIONS

Interior Trim Parts, 2 Door
Figure IXJ-410

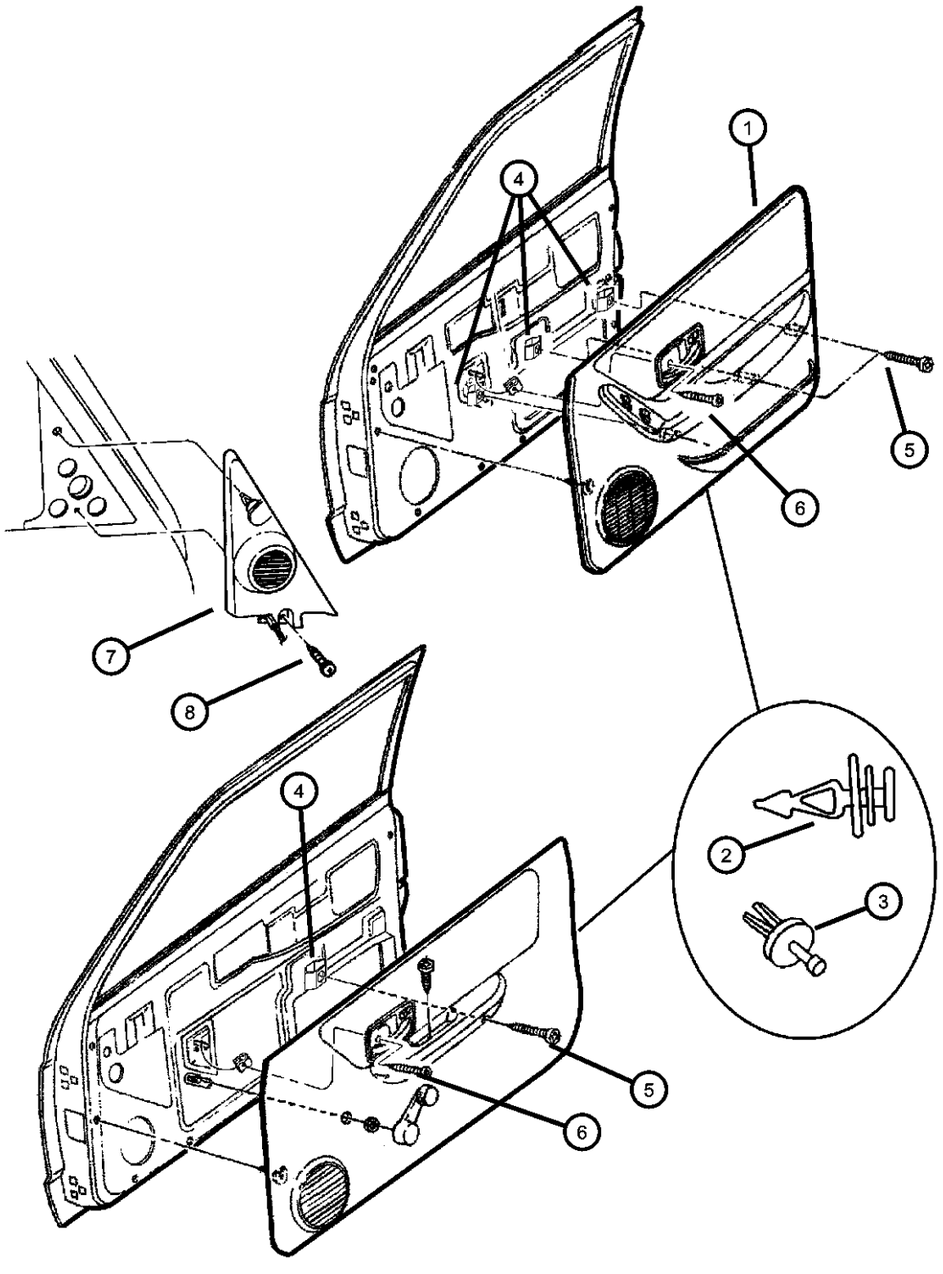

ITEM	PART NUMBER	QTY	LINE	SERIES	BODY	ENGINE	TRANS	TRIM	DESCRIPTION
	5FV14RT6	1						*O0	Saddle, With 6 Speaker System and Tweeter, Right
	5FV15RC3	1						*O0	Mist Gray, With 6 Speaker System and Tweeter, Left
8	5FV15RC3	1							SCREW, .164-18x.625, (NOT SERVICED),
-9	5FV15RC3	1							SCREW, Self Tapping, M4.2x1.69x19.05, Used on Front Door Trim Panel Tab, (NOT REQUIRED)

CHEROKEE (XJ)

SERIES	LINE	BODY	ENGINE	TRANSMISSION
L = LOWLINE	T = JEEP - 2WD B = JEEP - 2WD (RHD) J = JEEP - 4WD U = JEEP - 4WD (RHD)	72 = SPORT UTILITY 2-DR 74 = SPORT UTILITY 4-DR	ENC = 2.5L 4 Cyl Turbo Diesel Engine EPB = 2.5L 4 Cylinder Engine EPE = Engine - 2.5L Power Tech I-4 Cyl. ERH = 4.0L Power Tech I-6 Engine	DDQ = 5-Speed Manual Transmission DGS = 4-Speed Automatic AW4 Transmission DGO = ALL AUTOMATIC TRANSMISSIONS DBB = ALL MANUAL TRANSMISSIONS

Interior Trim Parts, 4 Door
Figure IXJ-420

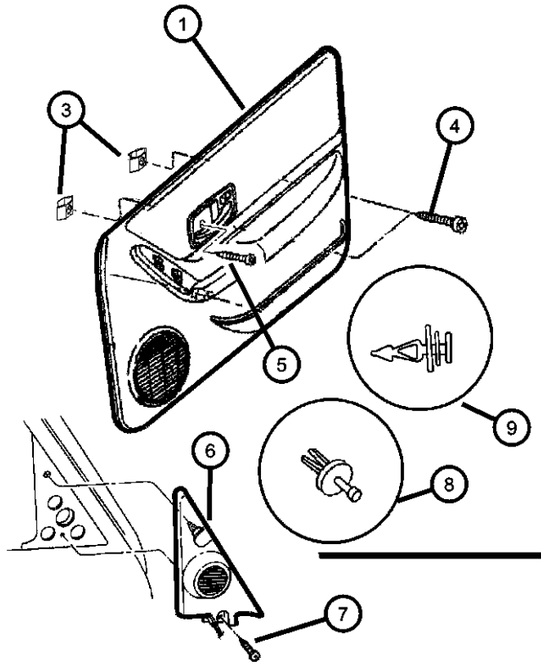

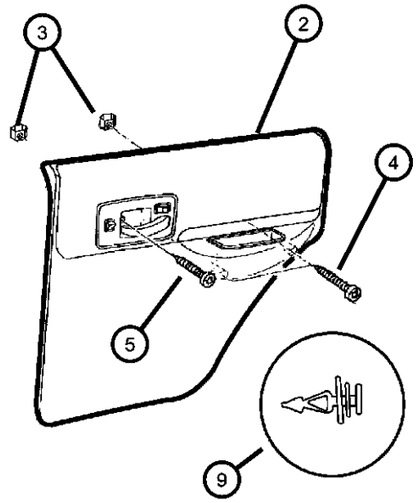

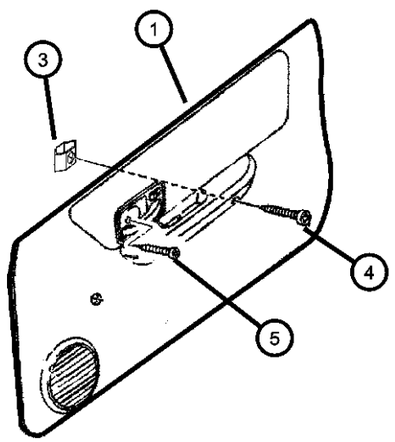

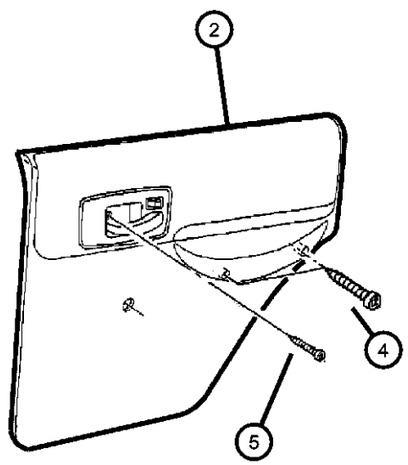

ITEM	PART NUMBER	QTY	LINE	SERIES	BODY	ENGINE	TRANS	TRIM	DESCRIPTION
CBW= Highland Vinyl CBV= Cloth With Map Pocket CBZ= Premium Vinly With Map Pocket GVB= Power Mirrors JPA= Power Windows JPB= Power Locks									
1									PANEL, Front Door Trim
	0QL561C3	1	J, T		74			*O0	Mist Gray, With Sales Codes CBW, JPA,JPB, Right
	0QL561T6	1	J, T		74			*O0	Saddle, With Sales Codes CBW, JPA,JPB, Right
	0QL571C3	1	J, T		74			*O0	Mist Gray, With Sales Codes CBW, JPA,GVB,JPB, Left
	0QL571T6	1	J, T		74			*O0	Saddle, With Sales Codes CBW, JPA,GVB,JPB, Left
	0QL581C3	1	B, U		74			*O0	Mist Gray, Sales Codes CBW, JPA,JPB, Right
	0QL581T6	1	B, U		74			*O0	Saddle, With Sales Codes CBW, JPA,JPB, Right
	0QL591C3	1	B, U		74			*O0	Mist Gray, With Sales Codes CBW, JPA,GVB,JPB, Left
	0QL591T6	1	B, U		74			*O0	Saddle, With Sales Codes CBW, JPA,GVB,JPB, Left
	0QL661C3	1	J, T		74			*O0	Mist Gray, With Sales Code CBV, Right
	0QL661T6	1	J, T		74			*O0	Saddle, With Sales Code CBV, Right
	0QL671C3	1	J		74			*O0	Mist Gray, With Sales Code CBV, Left
	0QL671T6	1	J		74			*O0	Saddle, With Sales Code CBV, Left
	0QL681C3	1	B, U		74			*O0	Mist Gray, With Sales Code CBV, Right
	0QL681T6	1	B, U		74			*O0	Saddle,With Sales Code CBV, Right
	0QL691C3	1	B, U		74			*O0	Mist Gray, With Sales Code CBV, Left
	0QL691T6	1	B, U		74			*O0	Saddle, With Sales Code CBV, Left
	0QL701C3	1	J, T		74			*O0	Mist Gray, With Sales Code CBZ, Right
	0QL701T6	1	J, T		74			*O0	Saddle, With Sales Code CBZ, Right
	0QL711C3	1	J, T		74			*O0	Mist Gray,With Sales Code CBZ, Left

CHEROKEE (XJ)

SERIES	LINE	BODY	ENGINE	TRANSMISSION
L = LOWLINE	T = JEEP - 2WD B = JEEP - 2WD (RHD) J = JEEP - 4WD U = JEEP - 4WD (RHD)	72 = SPORT UTILITY 2-DR 74 = SPORT UTILITY 4-DR	ENC = 2.5L 4 Cyl Turbo Diesel Engine EPB = 2.5L 4 Cylinder Engine EPE = Engine - 2.5L Power Tech I-4 Cyl. ERH = 4.0L Power Tech I-6 Engine	DDQ = 5-Speed Manual Transmission DGS = 4-Speed Automatic AW4 Transmission DGO = ALL AUTOMATIC TRANSMISSIONS DBB = ALL MANUAL TRANSMISSIONS

Interior Trim Parts, 4 Door
Figure IXJ-420

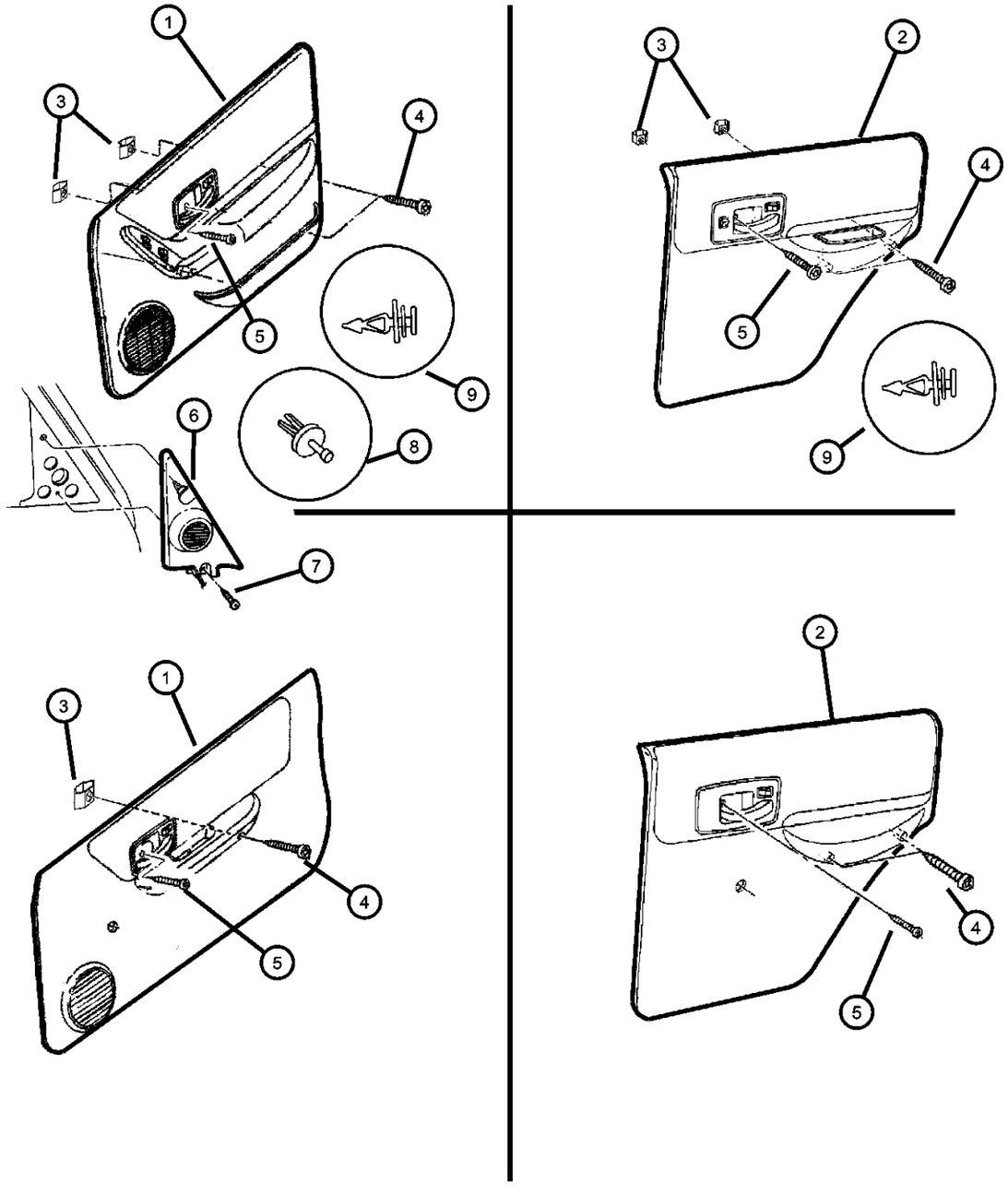

ITEM	PART NUMBER	QTY	LINE	SERIES	BODY	ENGINE	TRANS	TRIM	DESCRIPTION
	0QL711T6	1	J, T		74			*O0	Saddle, With Sales Code CBZ, Left
	0QL721C3	1	B, U		74			*O0	Mist Gray, With Sales Code CBZ, Right
	0QL721T6	1	B, U		74			*O0	Saddle, With Sales Code CBZ, Right
	0QL731C3	1	B, U		74			*O0	Mist Gray,With Sales Code CBZ, Left
	0QL731T6	1	B, U		74			*O0	Saddle, With Sales Code CBZ, Left
	5EH241C3	1	J, T		74			*O0	Mist Gray, With Sales Code CBW, Without Power, Right
		1	B, U		74			*O0	Mist Gray, With Sales Code CBW, Without Power, Right
	5EH241T6	1	J, T		74			*O0	Saddle, With Sales Code CBW, Without Power, Right
		1	B, U		74			*O0	Saddle, With Sales Code CBW, Without Power, Right
	5EH251C3	1	J, T		74			*O0	Mist Gray, With Sales Code CBW, Without Power, Left
		1	B, U		74			*O0	Mist Gray, With Sales Code CBW, Without Power, Left
	5EH251T6	1	J, T		74			*O0	Saddle, With Sales Code CBW, Without Power, Left
		1	B, U		74			*O0	Saddle, With Sales Code CBW, Without Power, Left
	5EH261C3	1	B, U		74			*O0	Mist Gray, With Sales Code CBW, Without Power, With Power Mirrors, Right
	5EH261T6	1	B, U		74			*O0	Saddle, With Sales Code CBW, Without Power, With Power Mirrors, Right
	5EH271C3	1	J, T		74			*O0	Mist Gray, With Sales Code CBW, Without Power, With Power Mirrors, Left
	5EH271T6	1	J, T		74			*O0	Saddle, With Sales Code CBW, Without Power, With Power Mirrors, Left
2									PANEL, Rear Door Trim
	0QL781C3	1			74			*O0	Mist Gray, With Sales Code CBW, With Power, Right
	0QL781T6	1			74			*O0	Saddle, With Sales Code CBW, With Power, Right
	0QL791C3	1			74			*O0	Mist Gray, With Sales Code CBW, With Power, Left

CHEROKEE (XJ)

SERIES	LINE	BODY	ENGINE	TRANSMISSION
L = LOWLINE	T = JEEP - 2WD B = JEEP - 2WD (RHD) J = JEEP - 4WD U = JEEP - 4WD (RHD)	72 = SPORT UTILITY 2-DR 74 = SPORT UTILITY 4-DR	ENC = 2.5L 4 Cyl Turbo Diesel Engine EPB = 2.5L 4 Cylinder Engine EPE = Engine - 2.5L Power Tech I-4 Cyl. ERH = 4.0L Power Tech I-6 Engine	DDQ = 5-Speed Manual Transmission DGS = 4-Speed Automatic AW4 Transmission DGO = ALL AUTOMATIC TRANSMISSIONS DBB = ALL MANUAL TRANSMISSIONS

Interior Trim Parts, 4 Door
Figure IXJ-420

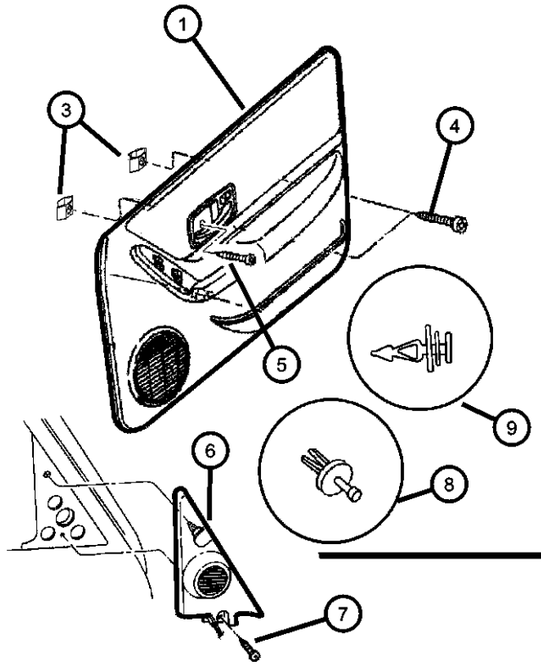

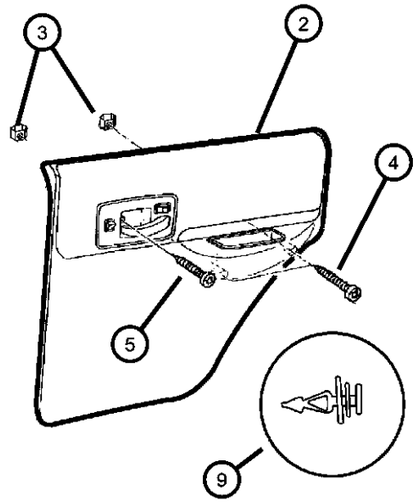

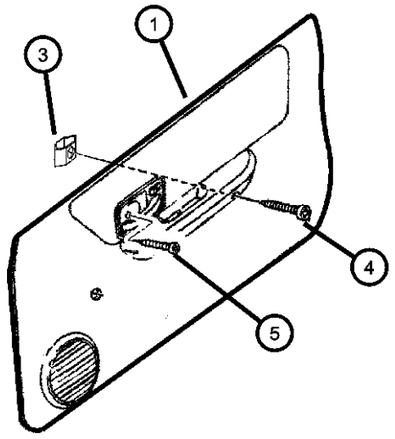

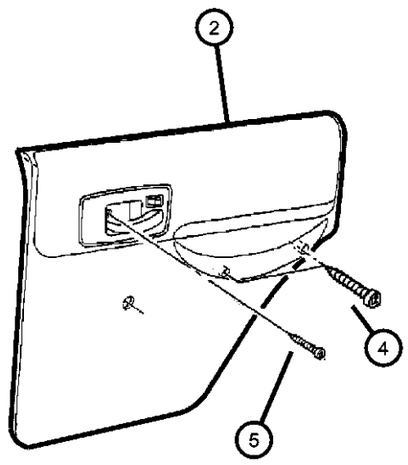

ITEM	PART NUMBER	QTY	LINE	SERIES	BODY	ENGINE	TRANS	TRIM	DESCRIPTION
	0QL791T6	1			74			*O0	Saddle, With Sales Code CBW, With Power, Left
	0QL801C3	1			74			*O0	Mist Gray, With Sales Code CBV, Right
	0QL801T6	1			74			*O0	Saddle, With Sales Code CBV, Right
	0QL811C3	1			74			*O0	Mist Gray, With Sales Code CBV, Left
	0QL811T6	1			74			*O0	Saddle, With Sales Code CBV, Left
	0QL821C3	1			74			*O0	Mist Gray, With Sales Code CBZ, Right
	0QL821T6	1			74			*O0	Saddle, With Sales Code CBZ, Right
	0QL831C3	1			74			*O0	Mist Gray, With Sales Code CBZ, Left
	0QL831T6	1			74			*O0	Saddle, With Sales Code CBZ, Left
	5EG821C3	1			74			*O0	Mist Gray,With Sales Code CBW, Without Power, Right
	5EG821T6	1			74			*O0	Saddle, With Sales Code CBW, Without Power, Right
	5EG831C3	1			74			*O0	Mist Gray, With Sales Code CBW, Without Power, Left
	5EG831T6	1			74			*O0	Saddle, With Sales Code CBW, Without Power, Left
3	06029509	6			74				U-NUT, .250-14
4	06029509	6							SCREW, Pan Head Tapping, .250x14x1.772, (NOT SERVICED)
5	06029509	6							SCREW, Remote Control Handle, M4x.7x16, (NOT SERVICED)
6									COVER, Mirror Opening
	5FM02RC3	1						*O0	Mist Gray, With 2 or 4 Speaker System, Right
	5FM02RT6	1						*O0	Saddle, With 2 or 4 Speaker System, Right
	5FM03RC3	1						*O0	Mist Gray, With 2 or 4 Speaker System, Left
	5FM03RT6	1						*O0	Saddle, With 2 or 4 Speaker System, Left
	5FV14RC3	1						*O0	Mist Gray, With 6 Speaker System, Right
	5FV14RT6	1						*O0	Saddle, With 6 Speaker System, Right

CHEROKEE (XJ)

SERIES	LINE	BODY	ENGINE	TRANSMISSION
L = LOWLINE	T = JEEP - 2WD B = JEEP - 2WD (RHD) J = JEEP - 4WD U = JEEP - 4WD (RHD)	72 = SPORT UTILITY 2-DR 74 = SPORT UTILITY 4-DR	ENC = 2.5L 4 Cyl Turbo Diesel Engine EPB = 2.5L 4 Cylinder Engine EPE = Engine - 2.5L Power Tech I-4 Cyl. ERH = 4.0L Power Tech I-6 Engine	DDQ = 5-Speed Manual Transmission DGS = 4-Speed Automatic AW4 Transmission DGO = ALL AUTOMATIC TRANSMISSIONS DBB = ALL MANUAL TRANSMISSIONS

Interior Trim Parts, 4 Door
Figure IXJ-420

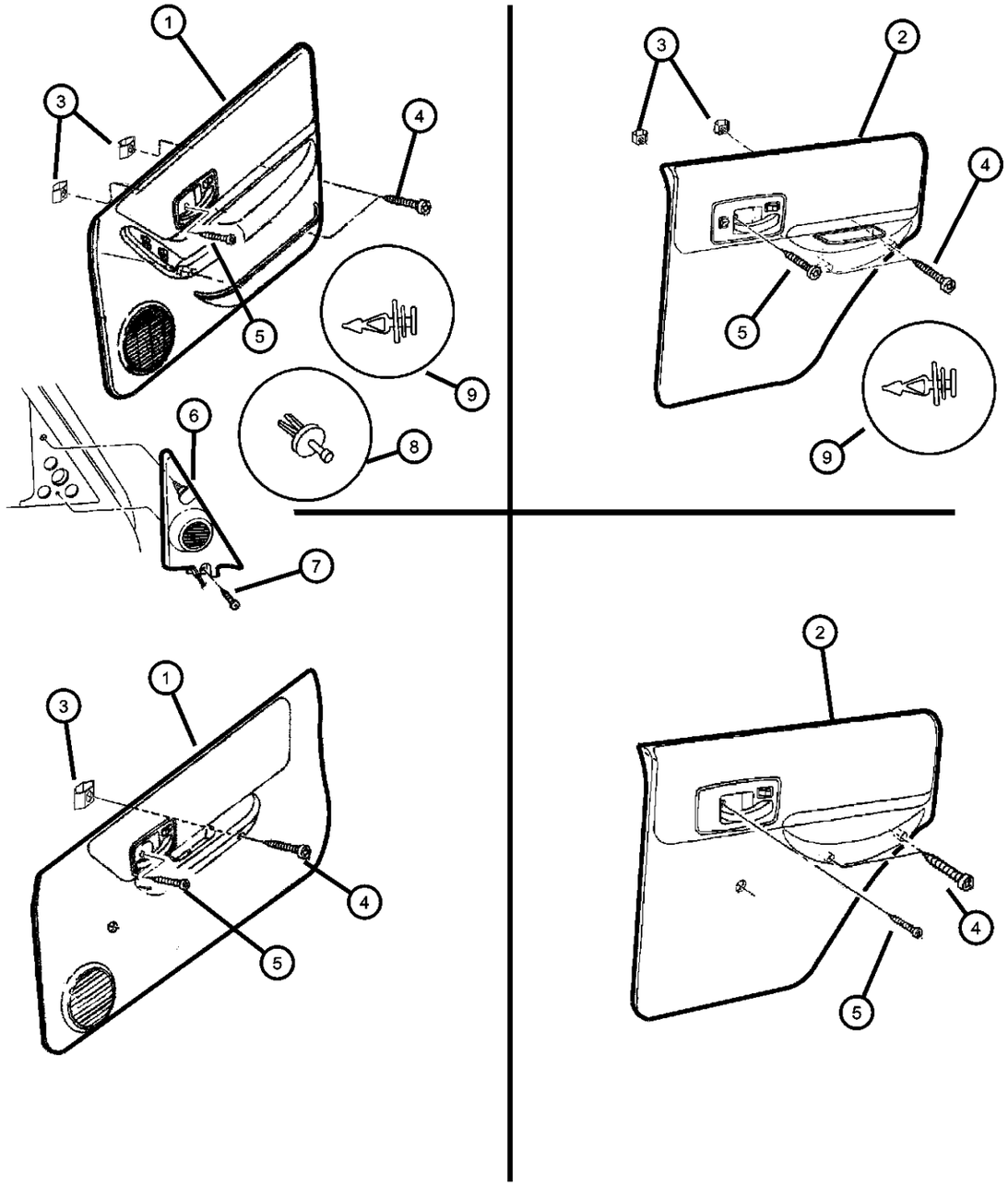

ITEM	PART NUMBER	QTY	LINE	SERIES	BODY	ENGINE	TRANS	TRIM	DESCRIPTION
	5FV15RC3	1						*O0	Mist Gray, With 6 Speaker System, Left
	5FV15RT6	1						*O0	Saddle, With 6 Speaker System, Left
7	5FV15RT6	1							SCREW, .164-18x.625, (NOT SERVICED),
8	06505009AA	AR							FASTENER, Door Trim Panel, Black
9	06504014	AR							FASTENER, Door Trim Panel, White
-10	06504014	AR							SCREW, Self Tapping, M4.2x1.69x19.05, Used on Front Door Trim Panel Tab, (NOT REQUIRED)

CHEROKEE (XJ)

SERIES	LINE	BODY	ENGINE	TRANSMISSION
L = LOWLINE	T = JEEP - 2WD B = JEEP - 2WD (RHD) J = JEEP - 4WD U = JEEP - 4WD (RHD)	72 = SPORT UTILITY 2-DR 74 = SPORT UTILITY 4-DR	ENC = 2.5L 4 Cyl Turbo Diesel Engine EPB = 2.5L 4 Cylinder Engine EPE = Engine - 2.5L Power Tech I-4 Cyl. ERH = 4.0L Power Tech I-6 Engine	DDQ = 5-Speed Manual Transmission DGS = 4-Speed Automatic AW4 Transmission DGO = ALL AUTOMATIC TRANSMISSIONS DBB = ALL MANUAL TRANSMISSIONS

AR = use ase required - = Non illustrrated part

Seat Covers and Seat Assemblies
Figure IXJ-510

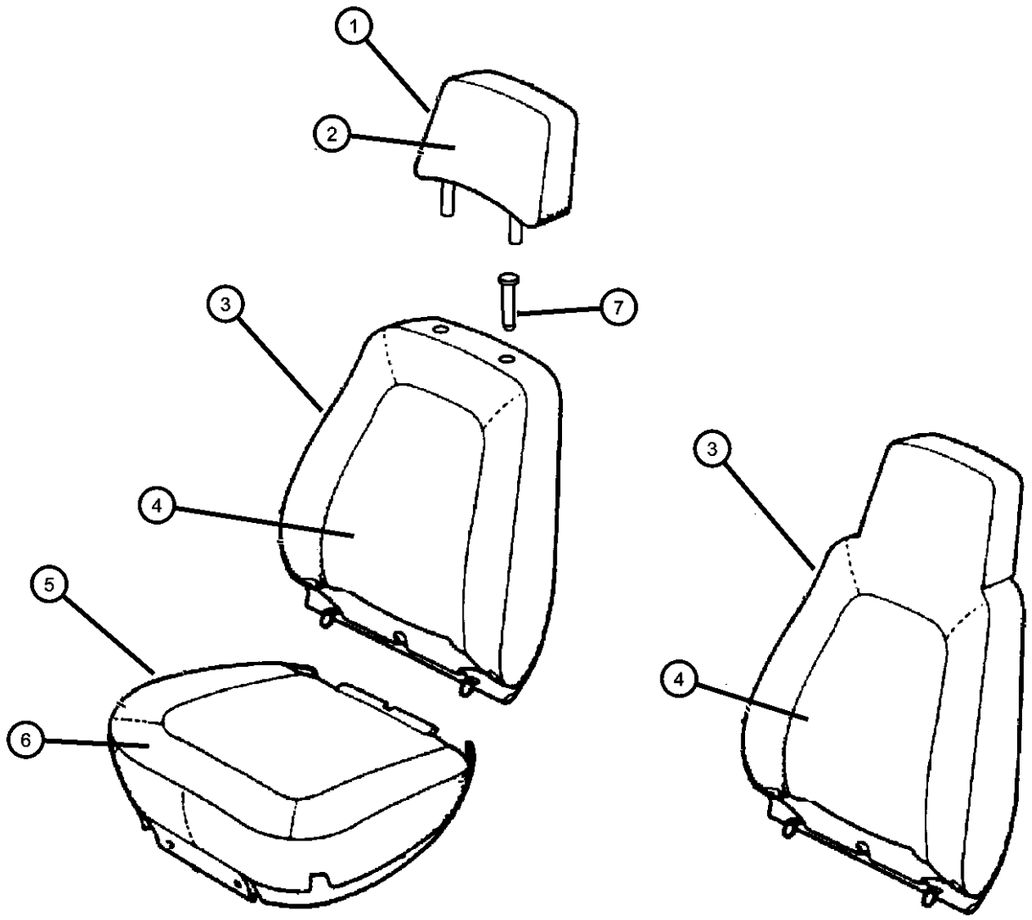

ITEM	PART NUMBER	QTY	LINE	SERIES	BODY	ENGINE	TRANS	TRIM	DESCRIPTION
1									HEADREST, Front
	0QW181C3AA	1	B, U		74			*DL	Mist Gray
		2	J, T		74			*DL	Mist Gray
	0QW181T6AA	1	B, U		74			*DL	Saddle
		2	J, T		74			*DL	Saddle
	0QW631C3AA	2			74			*XJ	Mist Gray
		1	J, T		72			*XJ	Mist Gray
		1	B, U		72			*XJ	Mist Gray
	0QW631T6AA	2			74			*XJ	Saddle
		1	J, T		72			*XJ	Saddle
		1	B, U		72			*XJ	Saddle
2									COVER, Seat Headrest
	0QW201C3AA	1			74			*DL	Mist Gray
	0QW201T6AA	1			74			*DL	Saddle
	0QW651C3AA	2			74			*XJ	Mist Gray
		2	J		72			*XJ	Mist Gray
	0QW651T6AA	2			74			*XJ	Saddle
		2	J		72			*XJ	Saddle
3									BACK, Front Seat
	0QV901C3AA	1			72			*B6	Mist Gray, Highback, Right
		1			74			*B6	Mist Gray, Highback, Right
	0QV901T6AA	1			72			*B6	Saddle, Highback, Right
		1			74			*B6	Saddle, Highback, Right
	0QV911C3AA	1			72			*B6	Mist Gray, Highback, Left
		1			74			*B6	Mist Gray, Highback, Left
	0QV911T6AA	1			72			*B6	Saddle, Highback, Left
		1			74			*B6	Saddle, Highback, Left
	0QW061C3AA	1	J, T		74			*DL	Mist Gray, Lowback, Right
	0QW061T6AA	1	J, T		74			*DL	Saddle, Lowback, Right
	0QW071C3AA	1	J, T		74			*DL	Mist Gray, Lowback, Left
	0QW071T6AA	1	J, T		74			*DL	Saddle, Lowback, Left
	0QW221C3AA	1			72			*M5	Mist Gray, Highback, Right
		1			74			*M5	Mist Gray, Highback, Right

CHEROKEE (XJ)

SERIES	LINE	BODY	ENGINE	TRANSMISSION
L = LOWLINE	T = JEEP - 2WD B = JEEP - 2WD (RHD) J = JEEP - 4WD U = JEEP - 4WD (RHD)	72 = SPORT UTILITY 2-DR 74 = SPORT UTILITY 4-DR	ENC = 2.5L 4 Cyl Turbo Diesel Engine EPB = 2.5L 4 Cylinder Engine EPE = Engine - 2.5L Power Tech I-4 Cyl. ERH = 4.0L Power Tech I-6 Engine	DDQ = 5-Speed Manual Transmission DGS = 4-Speed Automatic AW4 Transmission DGO = ALL AUTOMATIC TRANSMISSIONS DBB = ALL MANUAL TRANSMISSIONS

Seat Covers and Seat Assemblies
Figure IXJ-510

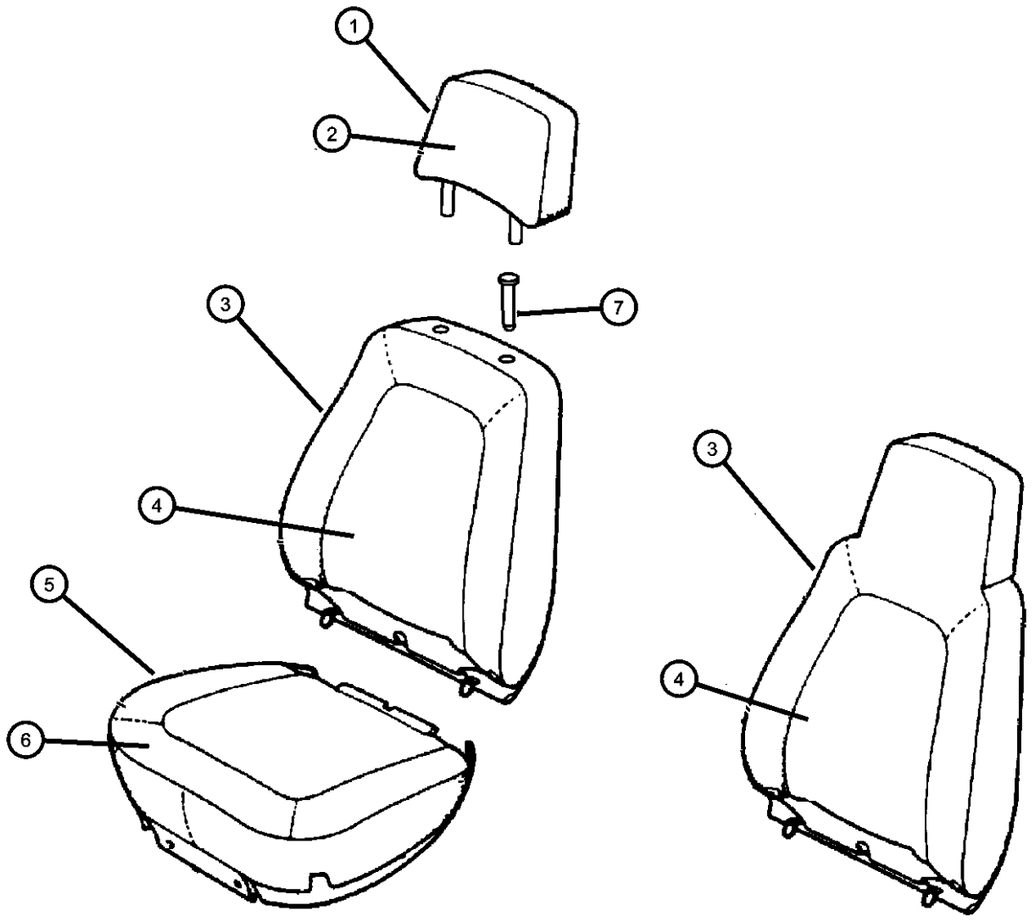

ITEM	PART NUMBER	QTY	LINE	SERIES	BODY	ENGINE	TRANS	TRIM	DESCRIPTION
		1	J, T		74			*X5	Mist Gray, Highback, Right
	0QW221T6AA	1			74			*M5	Saddle, Highback, Right
	0QW231T6AA	1			72			*M5	Saddle, Highback, Left
		1			74			*M5	Saddle, Highback, Left
		1	J, T		74			*X5	Saddle, Highback, Left
	0QW441C3AA	1			74			*XJ	Mist Gray, Lowback, Right
		1	J		72			*XJ	Mist Gray, Lowback, Right
		1	B		72			*XJ	Mist Gray, Lowback, Right
	0QW441T6AA	1			74			*XJ	Saddle, Lowback, Right
		1	J		72			*XJ	Saddle, Lowback, Right
		1	B		72			*XJ	Saddle, Lowback, Right
	0QW451C3AA	1			74			*XJ	Mist Gray, Lowback, Left
		1	J, T		72			*XJ	Mist Gray, Lowback, Left
		1	B, U		72			*XJ	Mist Gray, Lowback, Left
	0QW451T6AA	1			74			*XJ	Saddle, Lowback, Left
		1	J, T		72			*XJ	Saddle, Lowback, Left
		1	B, U		72			*XJ	Saddle, Lowback, Left
4									COVER, Seat Back
	0QV951C3AA	2			72			*B6	Mist Gray, Highback
		2			74			*B6	Mist Gray, Highback
	0QV951T6AA	2			72			*B6	Saddle, Highback
		2			74			*B6	Saddle, Highback
	0QW041C3AA	2			74			*DL	Mist Gray, Lowback
	0QW041T6AA	2			74			*DL	Saddle, Lowback
	0QW241C3AA	2			72			*M5	Mist Gray, Highback
		2			74			*M5	Mist Gray, Highback
		2			74			*X5	Mist Gray, Highback
	0QW241T6AA	2			72			*M5	Saddle, Highback
		2			74			*M5	Saddle, Highback
		2			74			*X5	Saddle, Highback
	0QW461C3AA	2			74			*XJ	Mist Gray, Lowback
		2	J		72			*XJ	Mist Gray, Lowback
		2	B		72			*XJ	Mist Gray, Lowback

CHEROKEE (XJ)

SERIES	LINE	BODY	ENGINE	TRANSMISSION
L = LOWLINE	T = JEEP - 2WD B = JEEP - 2WD (RHD) J = JEEP - 4WD U = JEEP - 4WD (RHD)	72 = SPORT UTILITY 2-DR 74 = SPORT UTILITY 4-DR	ENC = 2.5L 4 Cyl Turbo Diesel Engine EPB = 2.5L 4 Cylinder Engine EPE = Engine - 2.5L Power Tech I-4 Cyl. ERH = 4.0L Power Tech I-6 Engine	DDQ = 5-Speed Manual Transmission DGS = 4-Speed Automatic AW4 Transmission DGO = ALL AUTOMATIC TRANSMISSIONS DBB = ALL MANUAL TRANSMISSIONS

AR = use ase required - = Non illustrrated part

Seat Covers and Seat Assemblies
Figure IXJ-510

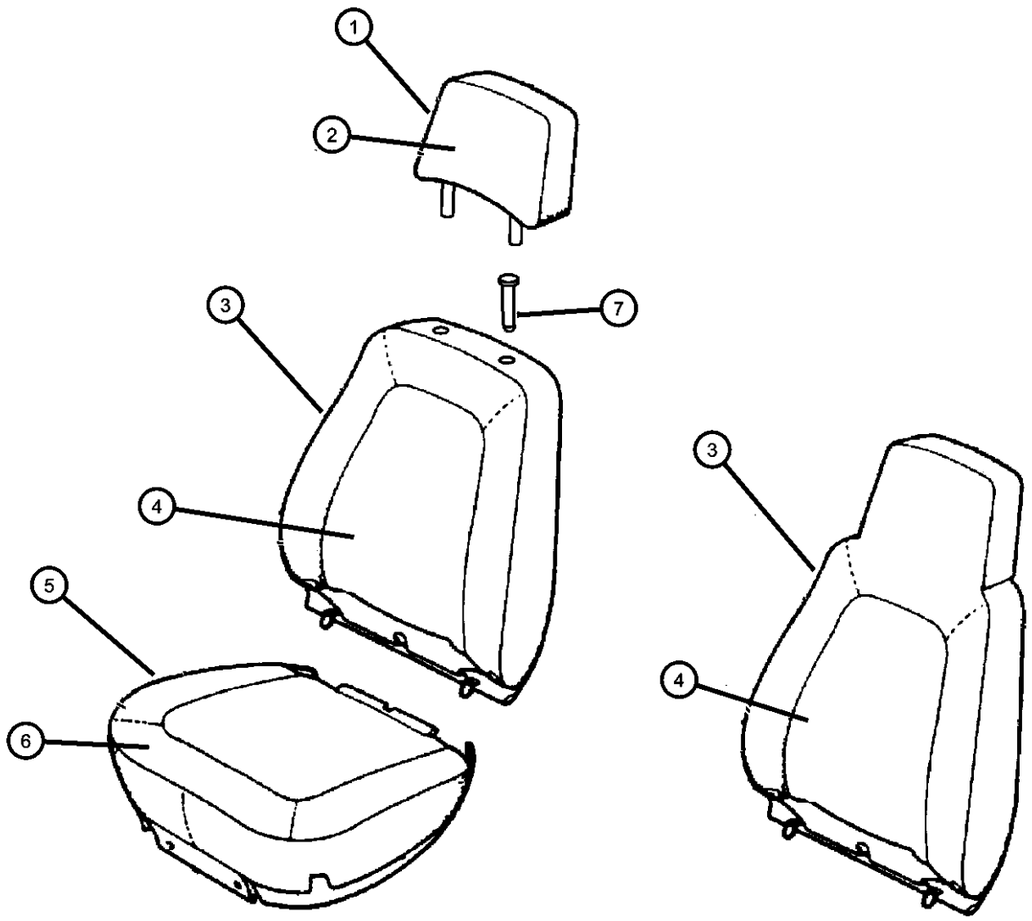

ITEM	PART NUMBER	QTY	LINE	SERIES	BODY	ENGINE	TRANS	TRIM	DESCRIPTION
	0QW461T6AA	2			74			*XJ	Saddle, Lowback
		2	J		72			*XJ	Saddle, Lowback
		2	B		72			*XJ	Saddle, Lowback
5									FRAME, Front Seat
	04856470	1			72			*B6	Right
		1			74			*B6	Right
		1			74			*DL	Right
		1			72			*M5	Right
		1			74			*M5	Right
		1			74			*XJ	Right
	04856471	1			72			*B6	Left
		1			74			*B6	Left
		1			74			*DL	Left
		1			72			*M5	Left
		1			74			*M5	Left
		1			74			*XJ	Left
		1			74			*X5	Left
6									COVER AND PAD, Cushion
	0QV881C3AA	1			74			*B6	Mist Gray, Right
		1	J, T		72			*B6	Mist Gray, Right
	0QV881T6AA	1			74			*B6	Saddle, Right
		1	J, T		72			*B6	Saddle, Right
	0QV891C3AA	1			74			*B6	Mist Gray, Left
		1	J, T		72			*B6	Mist Gray, Left
	0QV891T6AA	1			74			*B6	Saddle, Left
		1	J, T		72			*B6	Saddle, Left
	0QW021C3AA	1	J, T		74			*DL	Mist Gray, Right
	0QW021T6AA	1	J, T		74			*DL	Saddle, Right
	0QW031C3AA	1	J, T		74			*DL	Mist Gray, Left
	0QW031T6AA	1	J, T		74			*DL	Saddle, Left
	0QW261C3AA	1			72			*M5	Mist Gray, Right
		1			74			*M5	Mist Gray, Right
		1	J, T		74			*X5	Mist Gray, Right

CHEROKEE (XJ)

SERIES	LINE	BODY	ENGINE	TRANSMISSION
L = LOWLINE	T = JEEP - 2WD B = JEEP - 2WD (RHD) J = JEEP - 4WD U = JEEP - 4WD (RHD)	72 = SPORT UTILITY 2-DR 74 = SPORT UTILITY 4-DR	ENC = 2.5L 4 Cyl Turbo Diesel Engine EPB = 2.5L 4 Cylinder Engine EPE = Engine - 2.5L Power Tech I-4 Cyl. ERH = 4.0L Power Tech I-6 Engine	DDQ = 5-Speed Manual Transmission DGS = 4-Speed Automatic AW4 Transmission DGO = ALL AUTOMATIC TRANSMISSIONS DBB = ALL MANUAL TRANSMISSIONS

Seat Covers and Seat Assemblies
Figure IXJ-510

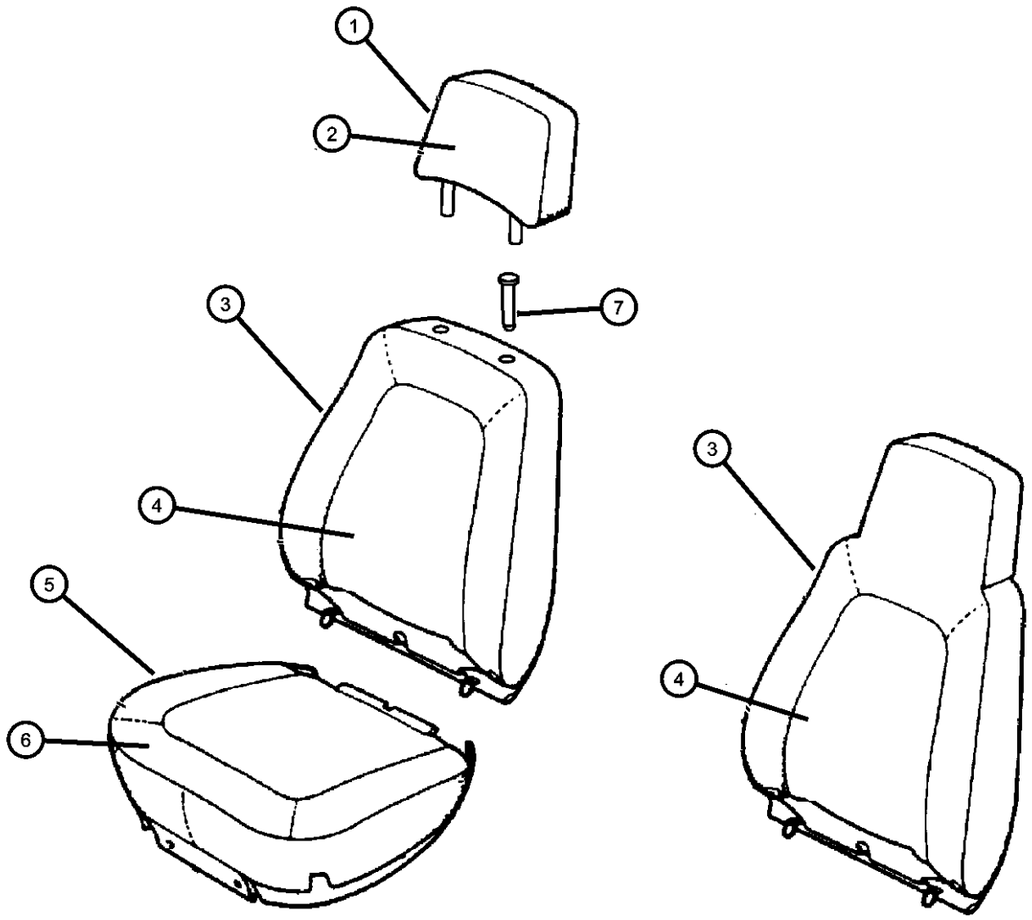

ITEM	PART NUMBER	QTY	LINE	SERIES	BODY	ENGINE	TRANS	TRIM	DESCRIPTION
	0QW261T6AA	1			72			*M5	Saddle, Right
		1			74			*M5	Saddle, Right
		1	J, T		74			*X5	Saddle, Right
	0QW271C3AA	1			72			*M5	Mist Gray, Left
		1			74			*M5	Mist Gray, Left
		1	J, T		74			*X5	Mist Gray, Left
	0QW271T6AA	1			72			*M5	Saddle, Left
		1			74			*M5	Saddle, Left
		1	J, T		74			*X5	Saddle, Left
	0QW501C3AA	1			74			*XJ	Mist Gray, Right
		1	J		72			*XJ	Mist Gray, Right
		1	B		72			*XJ	Mist Gray, Right
	0QW501T6AA	1			74			*XJ	Saddle, Right
		1	J		72			*XJ	Saddle, Right
		1	B		72			*XJ	Saddle, Right
	0QW511C3AA	1			74			*XJ	Mist Gray, Left
		1	J, T		72			*XJ	Mist Gray, Left
		1	B, U		72			*XJ	Mist Gray, Left
	0QW511T6AA	1			74			*XJ	Saddle, Left
		1	J, T		72			*XJ	Saddle, Left
		1	B, U		72			*XJ	Saddle, Left
7									CYLINDER, Headrest
	04723834	2			74			*DL	
		1			74			*XJ	
		1	J, T		72			*XJ	
		1	B, U		72			*XJ	

CHEROKEE (XJ)

SERIES	LINE	BODY	ENGINE	TRANSMISSION
L = LOWLINE	T = JEEP - 2WD B = JEEP - 2WD (RHD) J = JEEP - 4WD U = JEEP - 4WD (RHD)	72 = SPORT UTILITY 2-DR 74 = SPORT UTILITY 4-DR	ENC = 2.5L 4 Cyl Turbo Diesel Engine EPB = 2.5L 4 Cylinder Engine EPE = Engine - 2.5L Power Tech I-4 Cyl. ERH = 4.0L Power Tech I-6 Engine	DDQ = 5-Speed Manual Transmission DGS = 4-Speed Automatic AW4 Transmission DGO = ALL AUTOMATIC TRANSMISSIONS DBB = ALL MANUAL TRANSMISSIONS

AR = use ase required - = Non illustrrated part

Frame and Pad
Figure IXJ-610

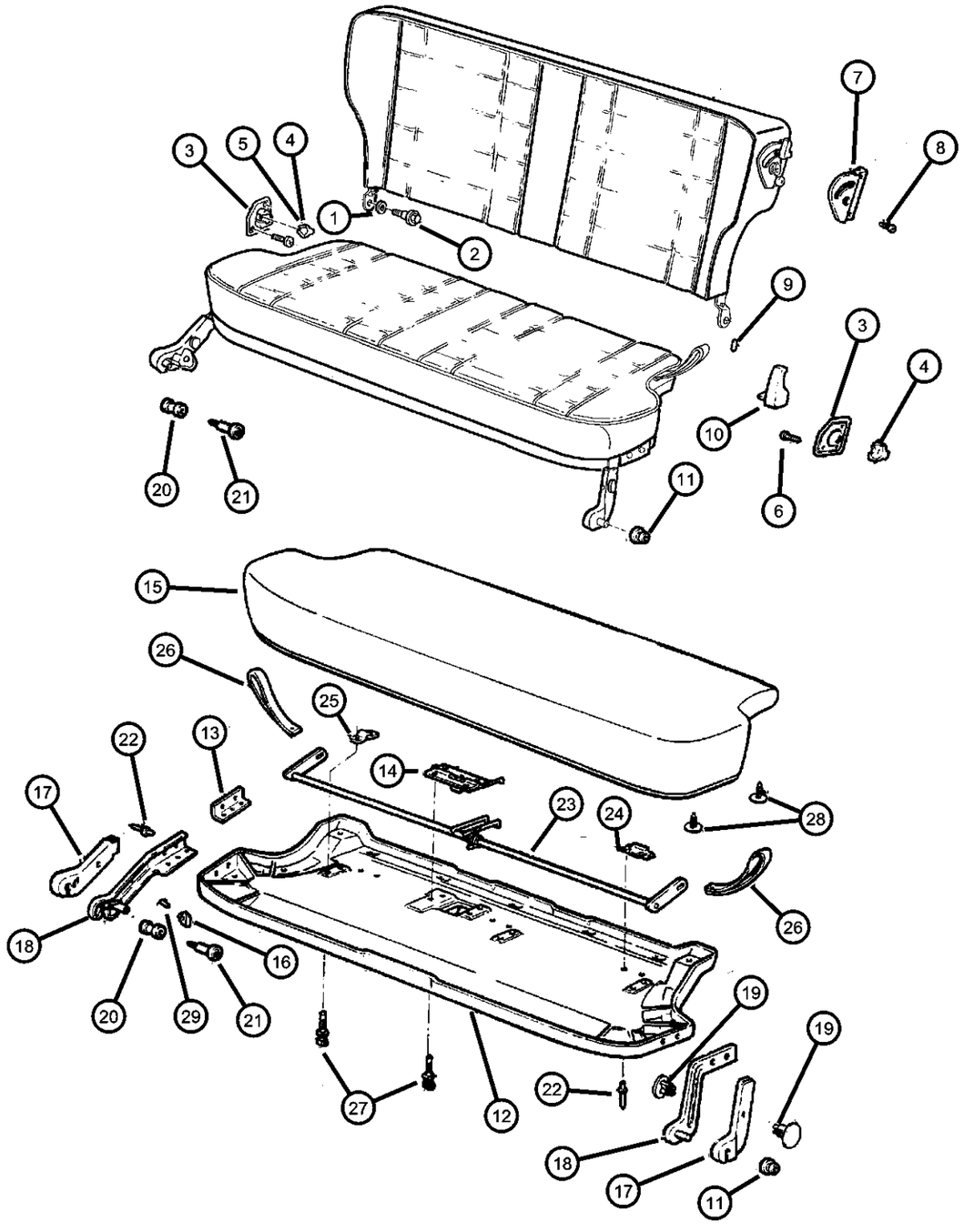

ITEM	PART NUMBER	QTY	LINE	SERIES	BODY	ENGINE	TRANS	TRIM	DESCRIPTION
1	55005617	1							SPACER, Seat Back Pivot
2	34201537	2							SCREW, Hex Washer Shoulder, M10x1.50x25.00
3									BRACKET, Seat Lock Striker
	55195980	1							Right
	55195981	1							Left
4	55001212	1							BUMPER, Latch StrikerRight
5	55001213	1							BUMPER, Seat BackLeft
6									SCREW, Pan Head Torx, M5x0.8x30.00
	34202189	6	J, T						
		8	B, U						
7									BEZEL, Seat Latch
	5AC661C3	1			72			*B6	Mist Gray, Right
		1			74			*B6	Mist Gray, Right
		1			74			*DL	Mist Gray, Right
		1			72			*M5	Mist Gray, Right
		1			74			*M5	Mist Gray, Right
		1			74			*XJ	Mist Gray, Right
		1	J		72			*XJ	Mist Gray, Right
		1	B		72			*XJ	Mist Gray, Right
		1			74			*X5	Mist Gray, Right
	5AC661T6	1			72			*B6	Saddle, Right
		1			74			*B6	Saddle, Right
		1			74			*DL	Saddle, Right
		1			72			*M5	Saddle, Right
		1			74			*M5	Saddle, Right
		1			74			*XJ	Saddle, Right
		1	B		72			*XJ	Saddle, Right
		1			74			*X5	Saddle, Right
	5AC671C3	1			72			*B6	Mist Gray, Left
		1			74			*B6	Mist Gray, Left
		1			74			*DL	Mist Gray, Left
		1			72			*M5	Mist Gray, Left

CHEROKEE (XJ)

SERIES	LINE	BODY	ENGINE	TRANSMISSION
L = LOWLINE	T = JEEP - 2WD B = JEEP - 2WD (RHD) J = JEEP - 4WD U = JEEP - 4WD (RHD)	72 = SPORT UTILITY 2-DR 74 = SPORT UTILITY 4-DR	ENC = 2.5L 4 Cyl Turbo Diesel Engine EPB = 2.5L 4 Cylinder Engine EPE = Engine - 2.5L Power Tech I-4 Cyl. ERH = 4.0L Power Tech I-6 Engine	DDQ = 5-Speed Manual Transmission DGS = 4-Speed Automatic AW4 Transmission DGO = ALL AUTOMATIC TRANSMISSIONS DBB = ALL MANUAL TRANSMISSIONS

Frame and Pad
Figure IXJ-610

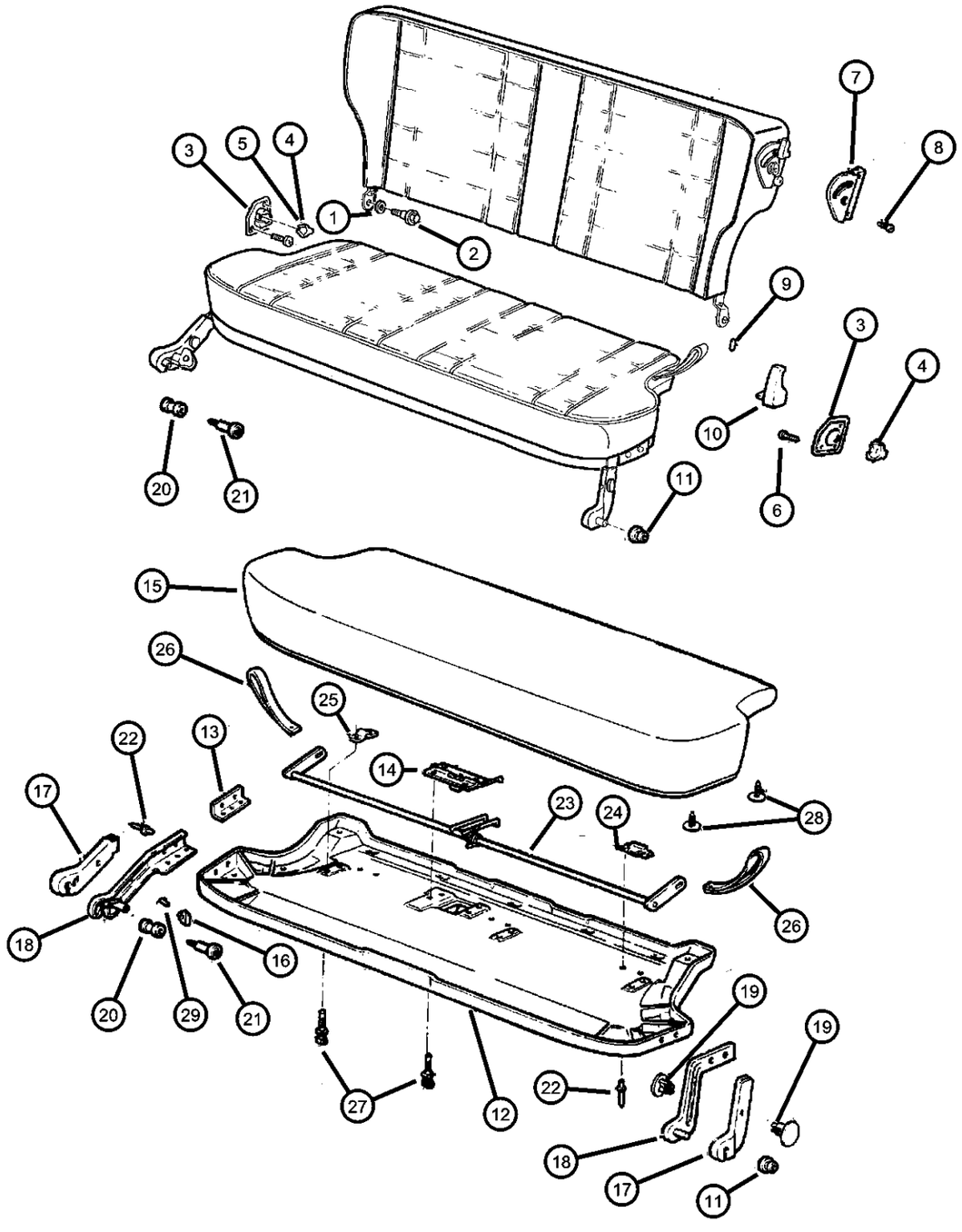

ITEM	PART NUMBER	QTY	LINE	SERIES	BODY	ENGINE	TRANS	TRIM	DESCRIPTION
		1			74			*M5	Mist Gray, Left
		1			74			*XJ	Mist Gray, Left
		1	J		72			*XJ	Mist Gray, Left
		1	B		72			*XJ	Mist Gray, Left
		1			74			*X5	Mist Gray, Left
	5AC671T6	1			72			*B6	Saddle, Left
		1			74			*B6	Saddle, Left
		1			74			*DL	Saddle, Left
		1			72			*M5	Saddle, Left
		1			74			*M5	Saddle, Left
		1			74			*XJ	Saddle, Left
		1	J		72			*XJ	Saddle, Left
		1	B		72			*XJ	Saddle, Left
		1			74			*X5	Saddle, Left
8	34201314	4						*O0	SCREW, Tapping Round Head, .164x18x1.232
9									SPRING, Pin
	J0455735	4			72			*B6	
		4			74			*B6	
		4			74			*DL	
		4			72			*M5	
		4			74			*M5	
		4			74			*XJ	
		4	J		72			*XJ	
		4	B		72			*XJ	
		4			74			*X5	
10									KNOB, Seat Back Latch
	0QC041C3	1			72			*B6	Mist Gray, Right
		1			74			*B6	Mist Gray, Right
		1			74			*DL	Mist Gray, Right
		1			72			*M5	Mist Gray, Right
		1			74			*M5	Mist Gray, Right
		1			74			*XJ	Mist Gray, Right

CHEROKEE (XJ)

SERIES	LINE	BODY	ENGINE	TRANSMISSION
L = LOWLINE	T = JEEP - 2WD B = JEEP - 2WD (RHD) J = JEEP - 4WD U = JEEP - 4WD (RHD)	72 = SPORT UTILITY 2-DR 74 = SPORT UTILITY 4-DR	ENC = 2.5L 4 Cyl Turbo Diesel Engine EPB = 2.5L 4 Cylinder Engine EPE = Engine - 2.5L Power Tech I-4 Cyl. ERH = 4.0L Power Tech I-6 Engine	DDQ = 5-Speed Manual Transmission DGS = 4-Speed Automatic AW4 Transmission DGO = ALL AUTOMATIC TRANSMISSIONS DBB = ALL MANUAL TRANSMISSIONS

Frame and Pad
Figure IXJ-610

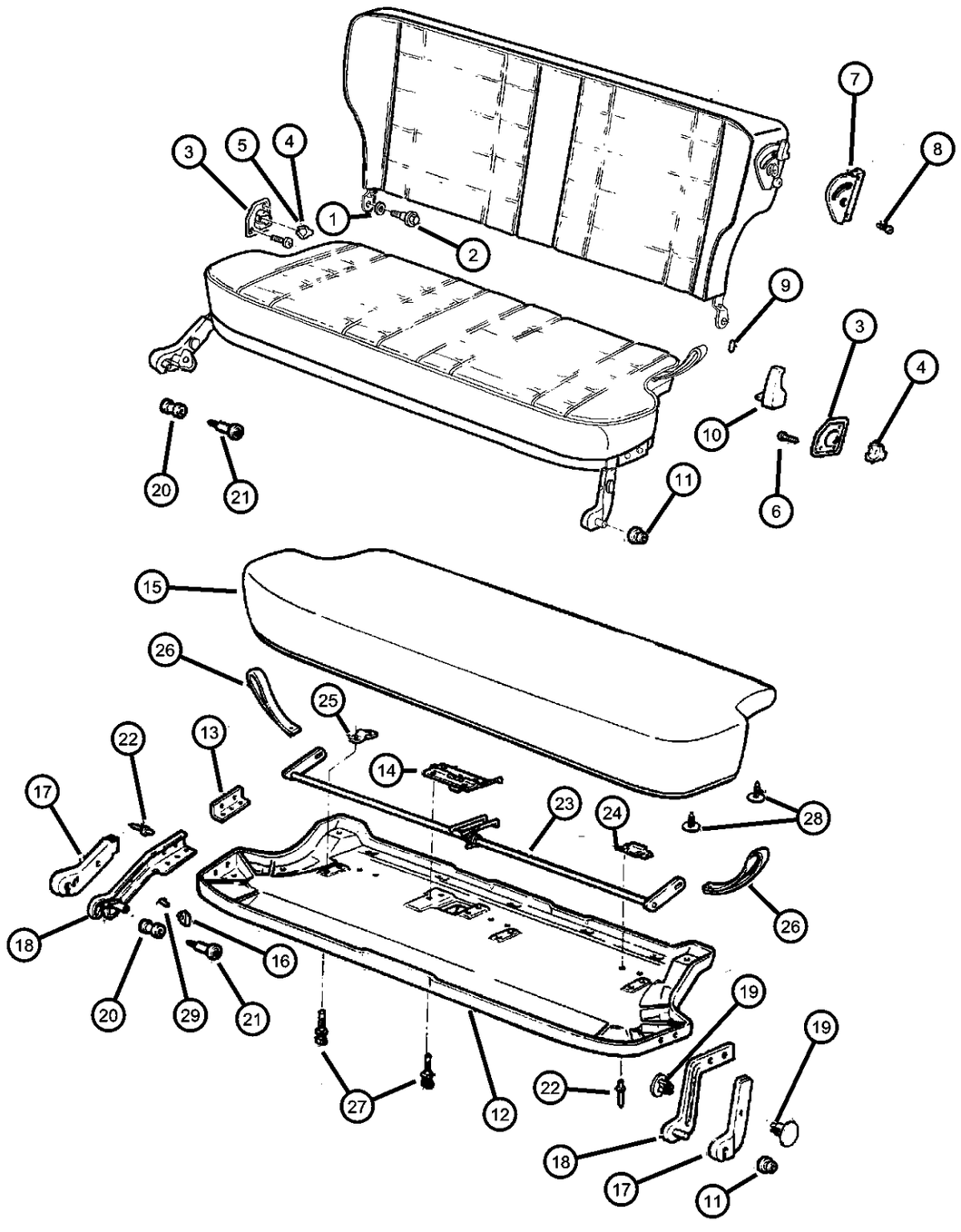

ITEM	PART NUMBER	QTY	LINE	SERIES	BODY	ENGINE	TRANS	TRIM	DESCRIPTION
		1	J		72			*XJ	Mist Gray, Right
		1	B		72			*XJ	Mist Gray, Right
		1			74			*X5	Mist Gray, Right
	0QC041T6	1			72			*B6	Saddle, Right
		1			74			*B6	Saddle, Right
		1			74			*DL	Saddle, Right
		1			72			*M5	Saddle, Right
		1			74			*M5	Saddle, Right
		1			74			*XJ	Saddle, Right
		1	J		72			*XJ	Saddle, Right
		1	B		72			*XJ	Saddle, Right
		1			74			*X5	Saddle, Right
	0QC051C3	1			72			*B6	Mist Gray, Left
		1			74			*B6	Mist Gray, Left
		1			74			*DL	Mist Gray, Left
		1			72			*M5	Mist Gray, Left
		1			74			*M5	Mist Gray, Left
		1			74			*XJ	Mist Gray, Left
		1	J		72			*XJ	Mist Gray, Left
		1	B		72			*XJ	Mist Gray, Left
		1			74			*X5	Mist Gray, Left
	0QC051T6	1			72			*B6	Saddle, Left
		1			74			*B6	Saddle, Left
		1			74			*DL	Saddle, Left
		1			72			*M5	Saddle, Left
		1			74			*M5	Saddle, Left
		1			74			*XJ	Saddle, Left
		1	J		72			*XJ	Saddle, Left
		1	B		72			*XJ	Saddle, Left
		1			74			*X5	Saddle, Left
11	55001230	1							GROMMET, Rear Seat
12									PANEL, Seat Cushion
	55195237	1			72			*B6	

CHEROKEE (XJ)

SERIES	LINE	BODY	ENGINE	TRANSMISSION
L = LOWLINE	T = JEEP - 2WD B = JEEP - 2WD (RHD) J = JEEP - 4WD U = JEEP - 4WD (RHD)	72 = SPORT UTILITY 2-DR 74 = SPORT UTILITY 4-DR	ENC = 2.5L 4 Cyl Turbo Diesel Engine EPB = 2.5L 4 Cylinder Engine EPE = Engine - 2.5L Power Tech I-4 Cyl. ERH = 4.0L Power Tech I-6 Engine	DDQ = 5-Speed Manual Transmission DGS = 4-Speed Automatic AW4 Transmission DGO = ALL AUTOMATIC TRANSMISSIONS DBB = ALL MANUAL TRANSMISSIONS

AR = use ase required - = Non illustrrated part

Frame and Pad
Figure IXJ-610

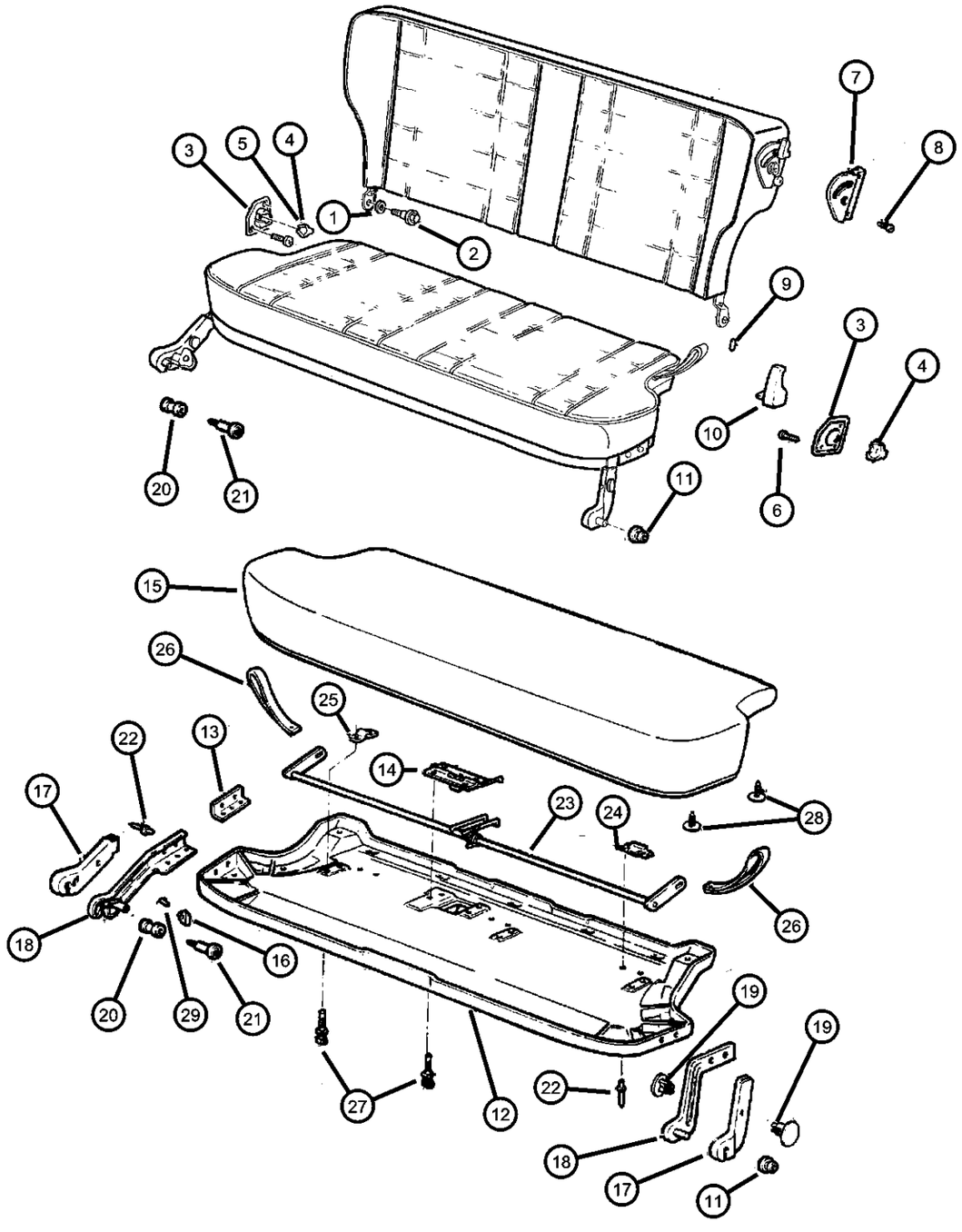

ITEM	PART NUMBER	QTY	LINE	SERIES	BODY	ENGINE	TRANS	TRIM	DESCRIPTION
		1			74			*B6	
		1			74			*DL	
		1			72			*M5	
		1			74			*M5	
		1			74			*XJ	
		1	J		72			*XJ	
		1	B		72			*XJ	
		1			74			*X5	
13									REINFORCEMENT, Seat Cushion Hinge
	55002833	2			72			*B6	
		2			74			*B6	
		2			74			*DL	
		2			72			*M5	
		2			74			*M5	
		2			74			*XJ	
		2	J		72			*XJ	
		2	B		72			*XJ	
		2			74			*X5	
14									LATCH, Seat
	55195372	1			72			*B6	
		1			74			*B6	
		1			74			*DL	
		1			72			*M5	
		1			74			*M5	
		1			74			*XJ	
		1	J		72			*XJ	
		1	B		72			*XJ	
		1			74			*X5	
15									PAD, Rear Seat Cushion
	55004573	1			72			*B6	
		1			74			*B6	
		1			74			*DL	

CHEROKEE (XJ)

SERIES	LINE	BODY	ENGINE	TRANSMISSION
L = LOWLINE	T = JEEP - 2WD B = JEEP - 2WD (RHD) J = JEEP - 4WD U = JEEP - 4WD (RHD)	72 = SPORT UTILITY 2-DR 74 = SPORT UTILITY 4-DR	ENC = 2.5L 4 Cyl Turbo Diesel Engine EPB = 2.5L 4 Cylinder Engine EPE = Engine - 2.5L Power Tech I-4 Cyl. ERH = 4.0L Power Tech I-6 Engine	DDQ = 5-Speed Manual Transmission DGS = 4-Speed Automatic AW4 Transmission DGO = ALL AUTOMATIC TRANSMISSIONS DBB = ALL MANUAL TRANSMISSIONS

Frame and Pad
Figure IXJ-610

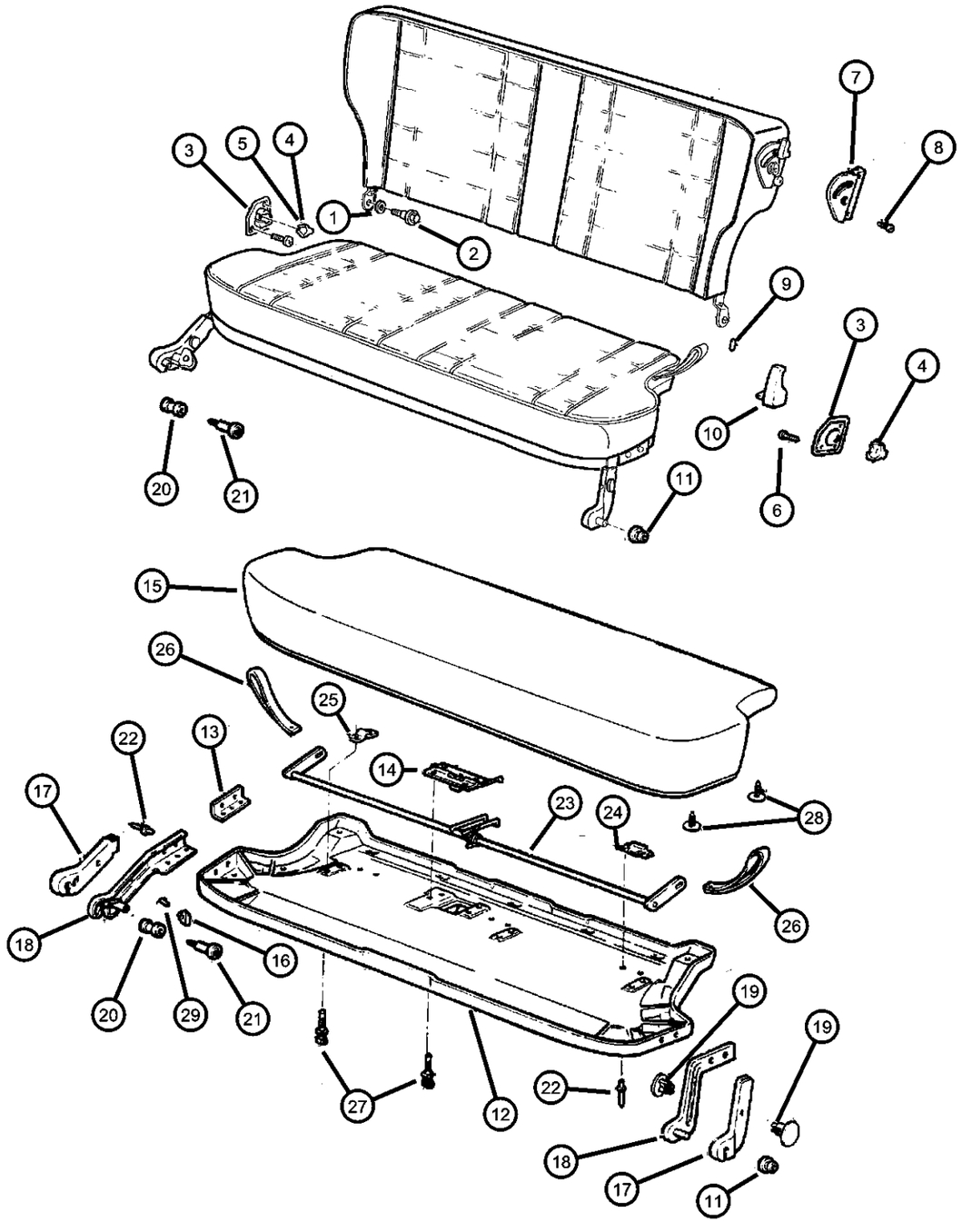

ITEM	PART NUMBER	QTY	LINE	SERIES	BODY	ENGINE	TRANS	TRIM	DESCRIPTION
		1			72			*M5	
		1			74			*M5	
		1			74			*XJ	
		1	J		72			*XJ	
		1	B		72			*XJ	
		1			74			*X5	
16									KNOB, Seat Back Latch
	5AC681C3	2			72			*B6	Mist Gray
		2			74			*B6	Mist Gray
		2			74			*DL	Mist Gray
		2			72			*M5	Mist Gray
		2			74			*M5	Mist Gray
		2			74			*XJ	Mist Gray
		2	J		72			*XJ	Mist Gray
		2	B		72			*XJ	Mist Gray
		2			74			*X5	Mist Gray
	5AC681T6	2			72			*B6	Saddle
		2			74			*DL	Saddle
		2			72			*M5	Saddle
		2			74			*M5	Saddle
		2			74			*XJ	Saddle
		2	J		72			*XJ	Saddle
		2	B		72			*XJ	Saddle
		2			74			*X5	Saddle
17									COVER, Rear Seat Hinge
	5AC461C3	1			72			*B6	Mist Gray, Right
		1			74			*B6	Mist Gray, Right
		1			74			*DL	Mist Gray, Right
		1			72			*M5	Mist Gray, Right
		1			74			*M5	Mist Gray, Right
		1			74			*XJ	Mist Gray
		1	J		72			*XJ	Mist Gray, Right
		1	B		72			*XJ	Mist Gray, Right

CHEROKEE (XJ)

SERIES	LINE	BODY	ENGINE	TRANSMISSION
L = LOWLINE	T = JEEP - 2WD B = JEEP - 2WD (RHD) J = JEEP - 4WD U = JEEP - 4WD (RHD)	72 = SPORT UTILITY 2-DR 74 = SPORT UTILITY 4-DR	ENC = 2.5L 4 Cyl Turbo Diesel Engine EPB = 2.5L 4 Cylinder Engine EPE = Engine - 2.5L Power Tech I-4 Cyl. ERH = 4.0L Power Tech I-6 Engine	DDQ = 5-Speed Manual Transmission DGS = 4-Speed Automatic AW4 Transmission DGO = ALL AUTOMATIC TRANSMISSIONS DBB = ALL MANUAL TRANSMISSIONS

Frame and Pad
Figure IXJ-610

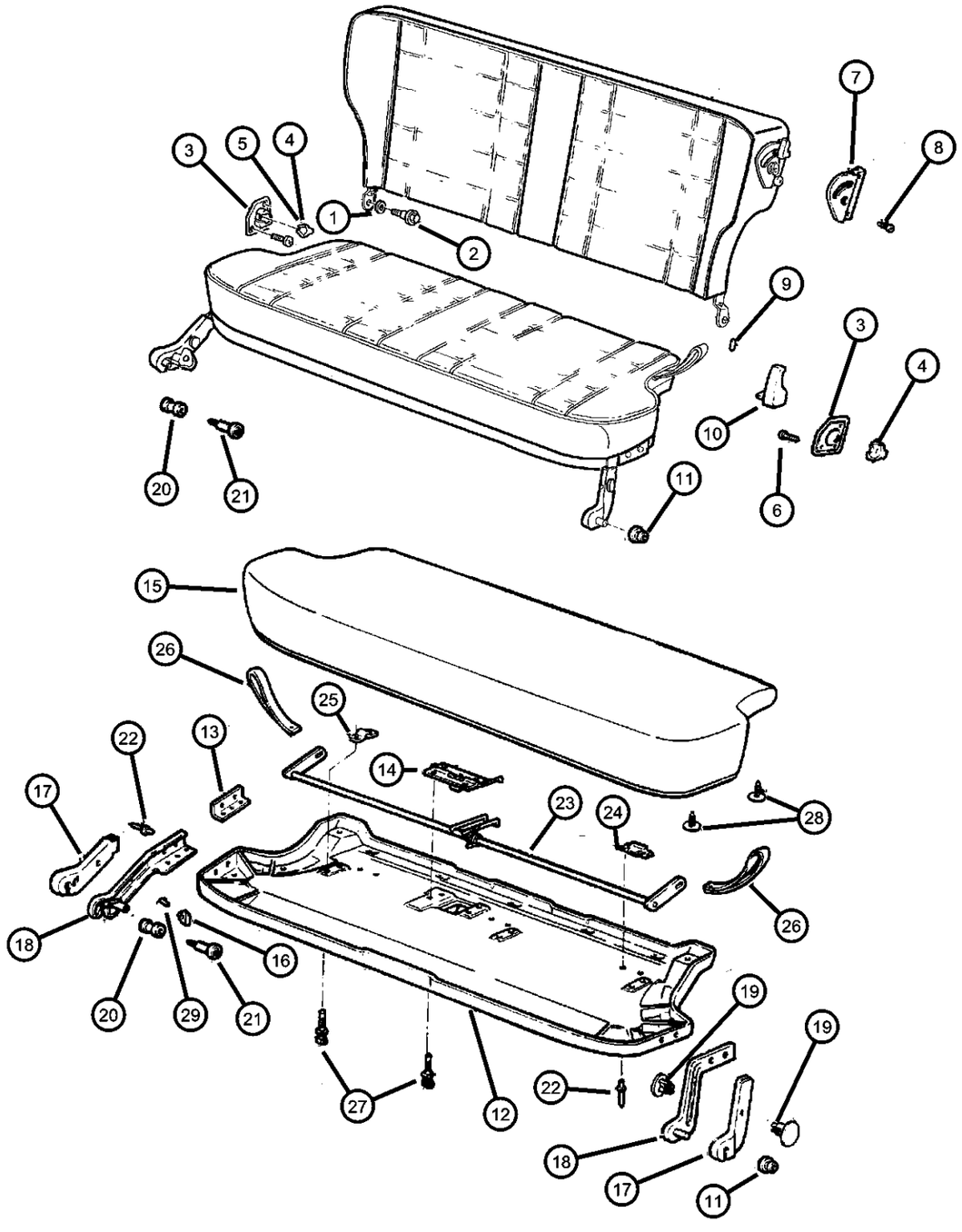

ITEM	PART NUMBER	QTY	LINE	SERIES	BODY	ENGINE	TRANS	TRIM	DESCRIPTION
		1			74			*X5	Mist Gray, Right
	5AC461T6	1			72			*B6	Saddle, Right
		1			74			*B6	Saddle, Right
		1			74			*DL	Saddle, Right
		1			72			*M5	Saddle, Right
		1			74			*M5	Saddle, Right
		1			74			*XJ	Saddle, Right
		1	J		72			*XJ	Saddle, Right
		1	B		72			*XJ	Saddle, Right
		1			74			*X5	Saddle, Right
	5AC471C3	1			72			*B6	Mist Gray, Left
		1			74			*B6	Mist Gray, Left
		1			74			*DL	Mist Gray, Left
		1			72			*M5	Mist Gray, Left
		1			74			*M5	Mist Gray, Left
		1			74			*XJ	Left
		1	J		72			*XJ	Mist Gray, Left
		1	B		72			*XJ	Mist Gray, Left
		1			74			*X5	Mist Gray, Left
	5AC471T6	1			72			*B6	Saddle, Left
		1			74			*B6	Saddle, Left
		1			74			*DL	Saddle, Left
		1			72			*M5	Saddle, Left
		1			74			*M5	Saddle, Left
		1			74			*XJ	Saddle, Left
		1	J		72			*XJ	Saddle, Left
		1	B		72			*XJ	Saddle, Left
		1			74			*X5	Saddle, Left
18									HINGE, Seat Cushion
	55001136	1			72			*B6	Right
		1			74			*B6	Right
		1			74			*DL	Right
		1			72			*M5	Right

CHEROKEE (XJ)

SERIES	LINE	BODY	ENGINE	TRANSMISSION
L = LOWLINE	T = JEEP - 2WD B = JEEP - 2WD (RHD) J = JEEP - 4WD U = JEEP - 4WD (RHD)	72 = SPORT UTILITY 2-DR 74 = SPORT UTILITY 4-DR	ENC = 2.5L 4 Cyl Turbo Diesel Engine EPB = 2.5L 4 Cylinder Engine EPE = Engine - 2.5L Power Tech I-4 Cyl. ERH = 4.0L Power Tech I-6 Engine	DDQ = 5-Speed Manual Transmission DGS = 4-Speed Automatic AW4 Transmission DGO = ALL AUTOMATIC TRANSMISSIONS DBB = ALL MANUAL TRANSMISSIONS

Frame and Pad
Figure IXJ-610

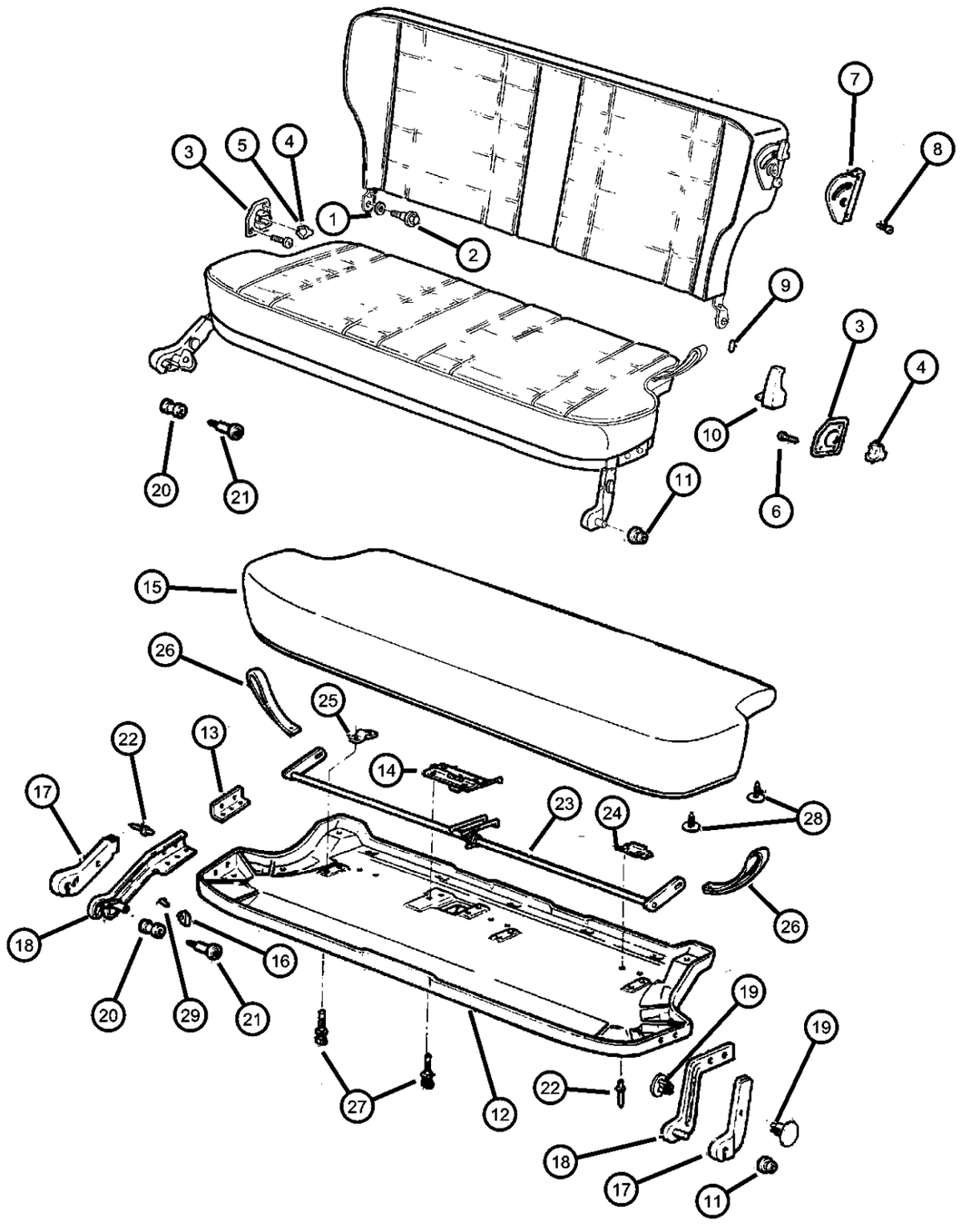

ITEM	PART NUMBER	QTY	LINE	SERIES	BODY	ENGINE	TRANS	TRIM	DESCRIPTION
		1			74			*M5	Right
		1			74			*XJ	Right
		1	J		72			*XJ	Right
		1	B		72			*XJ	Right
		1			74			*X5	Right
	55001137	1			72			*B6	Left
		1			74			*B6	Left
		1			74			*DL	Left
		1			72			*M5	Left
		1			74			*M5	Left
		1			74			*XJ	Left
		1	J		72			*XJ	Left
		1	B		72			*XJ	Left
		1			74			*X5	Left
19									RIVET, M8x12.40 Rachet Type
	34201845	4			72			*B6	
		4			74			*B6	
		4			74			*DL	
		4			72			*M5	
		4			74			*M5	
		4			74			*XJ	
		4	J		72			*XJ	
		4	B		74			*XJ	
		4			74			*X5	
20	55002437	1							BUSHING, Seat Cushion
21	34201530	1							BOLT, Shoulder, M10x1.50x50.6
22									RIVET, M6.3x23.47
	34201557	2			72			*B6	
		2			74			*B6	
		2			72			*M5	
		2			74			*M5	
		2			74			*XJ	
		2	J		72			*XJ	

CHEROKEE (XJ)

SERIES	LINE	BODY	ENGINE	TRANSMISSION
L = LOWLINE	T = JEEP - 2WD B = JEEP - 2WD (RHD) J = JEEP - 4WD U = JEEP - 4WD (RHD)	72 = SPORT UTILITY 2-DR 74 = SPORT UTILITY 4-DR	ENC = 2.5L 4 Cyl Turbo Diesel Engine EPB = 2.5L 4 Cylinder Engine EPE = Engine - 2.5L Power Tech I-4 Cyl. ERH = 4.0L Power Tech I-6 Engine	DDQ = 5-Speed Manual Transmission DGS = 4-Speed Automatic AW4 Transmission DGO = ALL AUTOMATIC TRANSMISSIONS DBB = ALL MANUAL TRANSMISSIONS

Frame and Pad
Figure IXJ-610

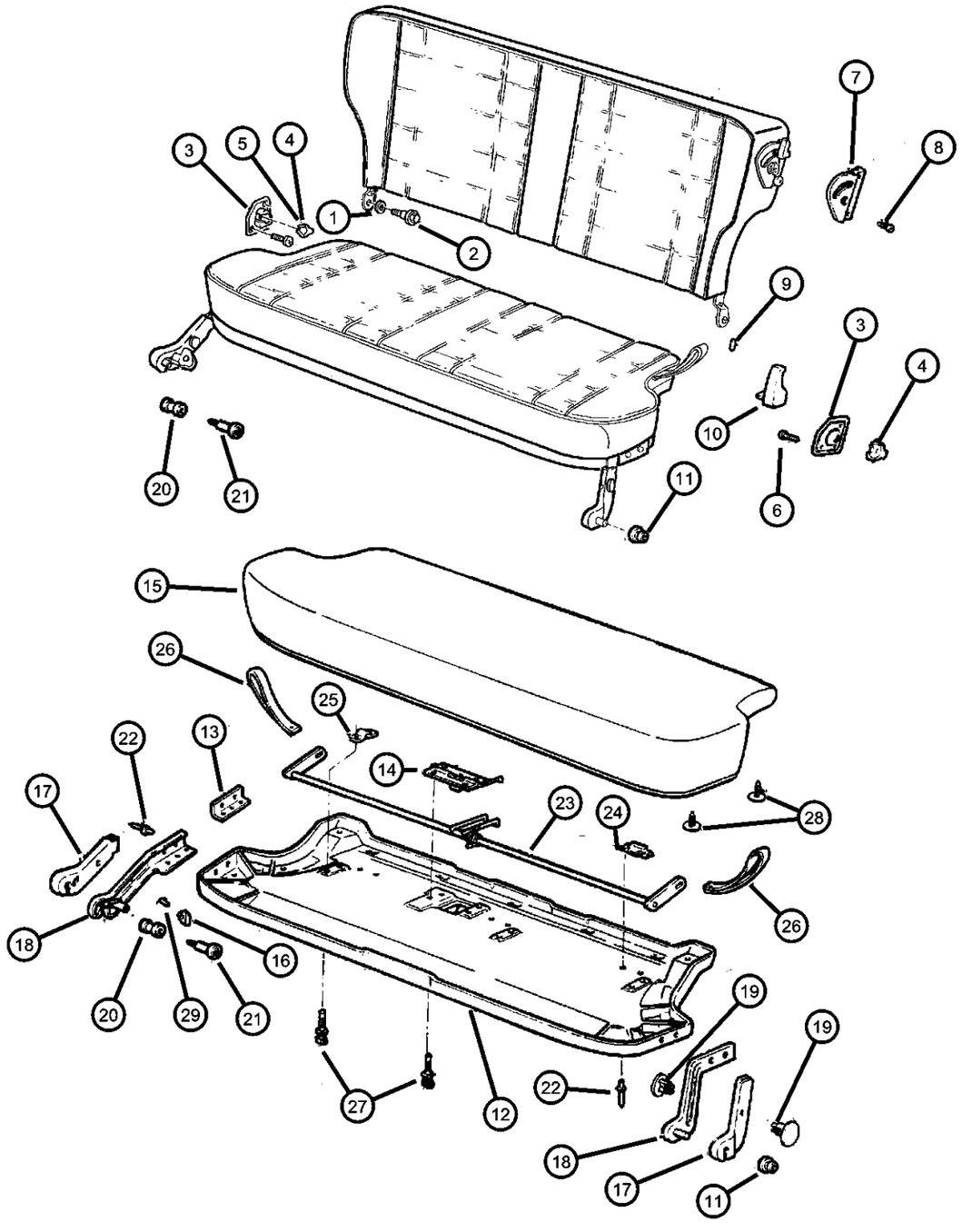

ITEM	PART NUMBER	QTY	LINE	SERIES	BODY	ENGINE	TRANS	TRIM	DESCRIPTION
		2	B		72			*XJ	
		2			74			*X5	
23									RELEASE, Seat Latch
	55004302	1			72			*B6	
		1			74			*B6	
		1			72			*M5	
		1			74			*M5	
		1			74			*XJ	
		1	J		72			*XJ	
		1	B		72			*XJ	
		1			74			*X5	
24									BRACKET, Seat Cushion
	55195937	1			72			*B6	
		1			74			*B6	
		1			74			*DL	
		1			72			*M5	
		1			74			*M5	
		1			74			*XJ	
		1	J		72			*XJ	
		1	B		72			*XJ	
		1			74			*X5	
25									BRACKET, Seat Latch
	55004301	2			72			*B6	
		2			74			*B6	
		2			74			*DL	
		2			72			*M5	
		2			74			*M5	
		2			74			*XJ	
		2	J		72			*XJ	
		2	B		72			*XJ	
		2			74			*X5	
26									STRAP, Rear Seat Latch
	5AJ471C3	2			72			*B6	Mist Gray

CHEROKEE (XJ)

SERIES	LINE	BODY	ENGINE	TRANSMISSION
L = LOWLINE	T = JEEP - 2WD B = JEEP - 2WD (RHD) J = JEEP - 4WD U = JEEP - 4WD (RHD)	72 = SPORT UTILITY 2-DR 74 = SPORT UTILITY 4-DR	ENC = 2.5L 4 Cyl Turbo Diesel Engine EPB = 2.5L 4 Cylinder Engine EPE = Engine - 2.5L Power Tech I-4 Cyl. ERH = 4.0L Power Tech I-6 Engine	DDQ = 5-Speed Manual Transmission DGS = 4-Speed Automatic AW4 Transmission DGO = ALL AUTOMATIC TRANSMISSIONS DBB = ALL MANUAL TRANSMISSIONS

Frame and Pad
Figure IXJ-610

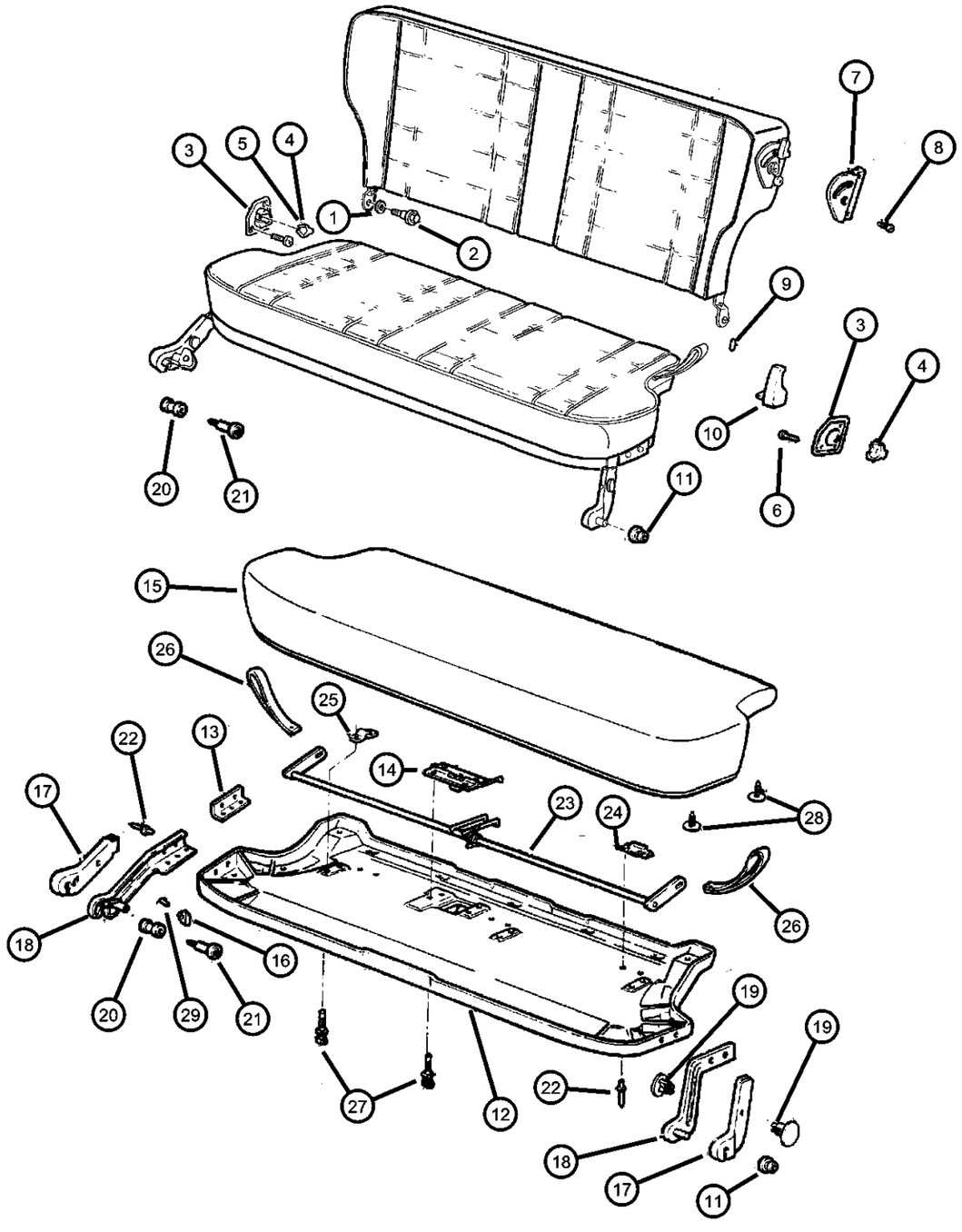

ITEM	PART NUMBER	QTY	LINE	SERIES	BODY	ENGINE	TRANS	TRIM	DESCRIPTION
		2			74			*B6	Mist Gray
		2			74			*DL	Mist Gray
		2			72			*M5	Mist Gray
		2			74			*M5	Mist Gray
		2			74			*XJ	Mist Gray
		2	J		72			*XJ	Mist Gray
		2	B		72			*XJ	Mist Gray
		2			74			*X5	Mist Gray
	5AJ471T6	2			74			*B6	Saddle
		2			74			*DL	Saddle
		2			72			*M5	Saddle
		2			74			*M5	Saddle
		2			74			*XJ	Saddle
		2	J		72			*XJ	Saddle
		2	B		72			*XJ	Saddle
		2			74			*X5	Saddle
27									RIVET, Blind, M6.25x28
	34202078	6			72			*B6	
		6			74			*B6	
		6			74			*DL	
		6			72			*M5	
		6			74			*M5	
		6			74			*XJ	
		6	J		72			*XJ	
		6	B		72			*XJ	
		6			74			*X5	
28									FASTENER, .193 Hole
	5AA341C3	6			72			*B6	Mist Gray
		6			74			*DL	Mist Gray
		6			72			*M5	Mist Gray
		6			74			*M5	Mist Gray
		6			74			*XJ	Mist Gray
		6	J		72			*XJ	Mist Gray

CHEROKEE (XJ)

SERIES	LINE	BODY	ENGINE	TRANSMISSION
L = LOWLINE	T = JEEP - 2WD B = JEEP - 2WD (RHD) J = JEEP - 4WD U = JEEP - 4WD (RHD)	72 = SPORT UTILITY 2-DR 74 = SPORT UTILITY 4-DR	ENC = 2.5L 4 Cyl Turbo Diesel Engine EPB = 2.5L 4 Cylinder Engine EPE = Engine - 2.5L Power Tech I-4 Cyl. ERH = 4.0L Power Tech I-6 Engine	DDQ = 5-Speed Manual Transmission DGS = 4-Speed Automatic AW4 Transmission DGO = ALL AUTOMATIC TRANSMISSIONS DBB = ALL MANUAL TRANSMISSIONS

Frame and Pad
Figure IXJ-610

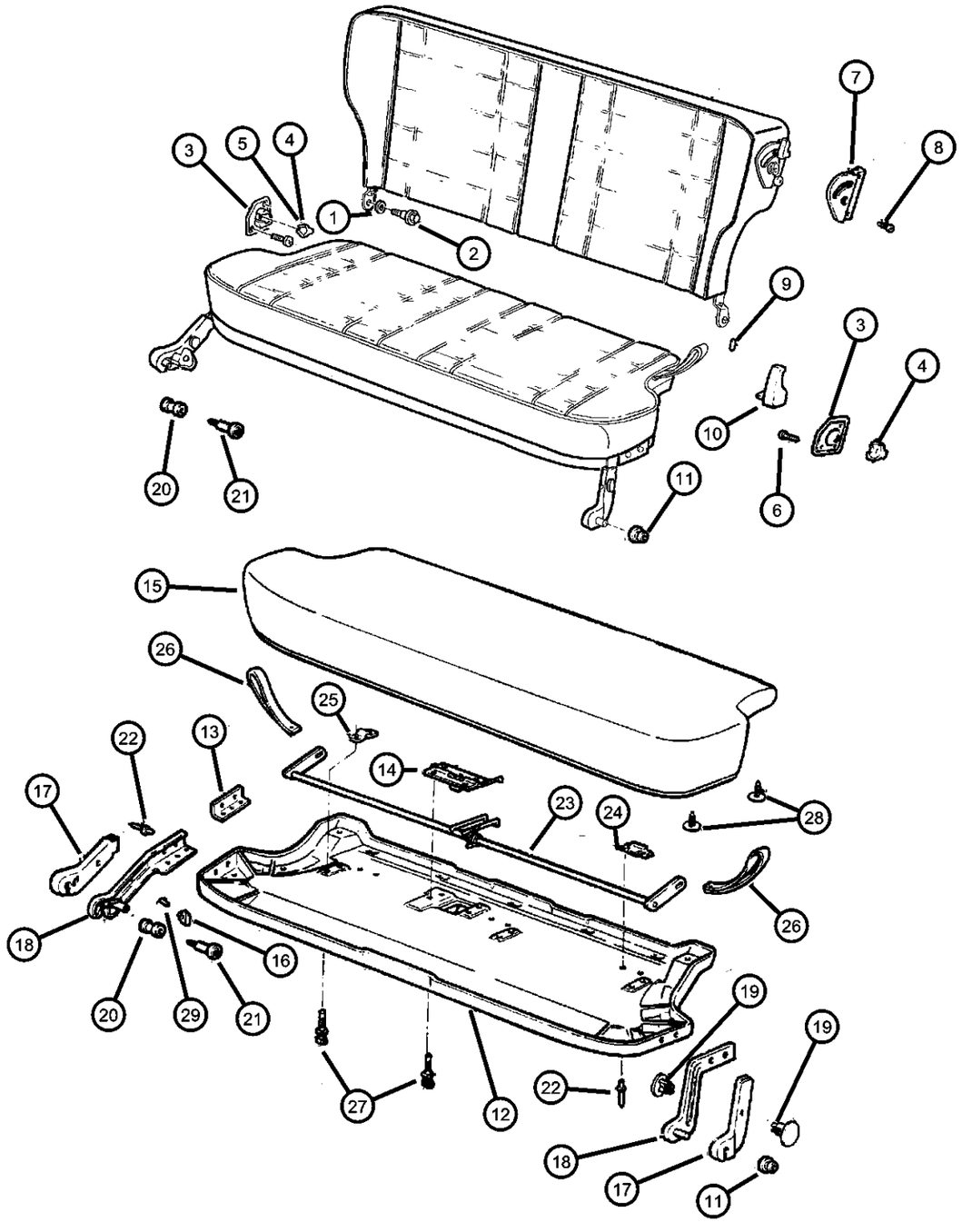

ITEM	PART NUMBER	QTY	LINE	SERIES	BODY	ENGINE	TRANS	TRIM	DESCRIPTION
		6	B		72			*XJ	Mist Gray
		6			74			*X5	Mist Gray
	5AA341T6	6			72			*B6	Saddle
		6			74			*B6	Saddle
		6			74			*DL	Saddle
		6			72			*M5	Saddle
		6			74			*M5	Saddle
		6			74			*XJ	Saddle
		6	J		72			*XJ	Saddle
		6	B		72			*XJ	Saddle
		6			74			*X5	Saddle
29									SPRING, Pin
	J0455735	4			72			*B6	
		4			74			*B6	
		4			72			*M5	
		4			74			*M5	
		4			74			*XJ	
		4	J		72			*XJ	
		4	B		72			*XJ	
		4			74			*X5	
		4	B, U		74			*B6	
-30	05003422AA	1							TETHER PACKAGE, Child Seat

CHEROKEE (XJ)

SERIES	LINE	BODY	ENGINE	TRANSMISSION
L = LOWLINE	T = JEEP - 2WD B = JEEP - 2WD (RHD) J = JEEP - 4WD U = JEEP - 4WD (RHD)	72 = SPORT UTILITY 2-DR 74 = SPORT UTILITY 4-DR	ENC = 2.5L 4 Cyl Turbo Diesel Engine EPB = 2.5L 4 Cylinder Engine EPE = Engine - 2.5L Power Tech I-4 Cyl. ERH = 4.0L Power Tech I-6 Engine	DDQ = 5-Speed Manual Transmission DGS = 4-Speed Automatic AW4 Transmission DGO = ALL AUTOMATIC TRANSMISSIONS DBB = ALL MANUAL TRANSMISSIONS

Covers, seat Upholstery
Figure IXJ-620

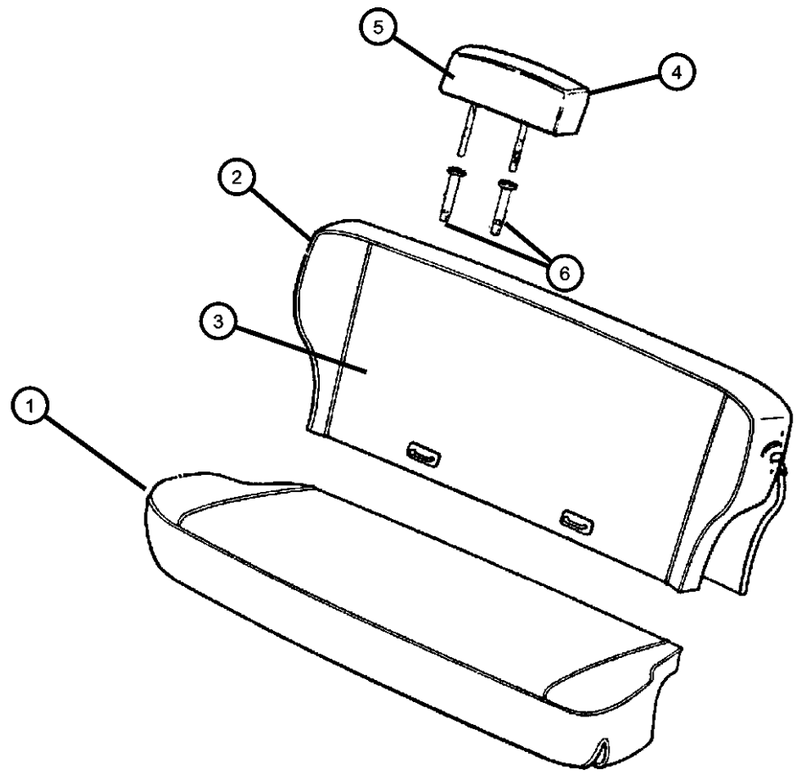

ITEM	PART NUMBER	QTY	LINE	SERIES	BODY	ENGINE	TRANS	TRIM	DESCRIPTION
1									COVER, Rear Seat Cushion
	0QW001C3AA	1			72			*B6	Mist Gray
		1			74			*B6	Mist Gray
		1			74			*X5	Mist Gray
	0QW001T6AA	1			72			*B6	Saddle
		1			74			*B6	Saddle
		1			74			*X5	Saddle
	0QW151C3AA	1			74			*DL	Mist Gray
	0QW151T6AA	1			74			*DL	Saddle
	0QW431C3AA	1			72			*M5	Mist Gray
		1			74			*M5	Mist Gray
	0QW431T6AA	1			72			*M5	Saddle
		1			74			*M5	Saddle
	0QW611C3AA	1			74			*XJ	Mist Gray
		1			74			*XJ	Saddle
		1	J		72			*XJ	Mist Gray
		1	B		72			*XJ	Mist Gray
	0QW611T6AA	1	J		72			*XJ	Saddle
		1	B		72			*XJ	Saddle
2									SEAT BACK, Rear
	0QV961C3AA	1			72			*B6	Mist Gray
		1			74			*B6	Mist Gray
		1			74			*X5	Mist Gray
	0QV961T6AA	1			72			*B6	Saddle
		1			74			*B6	Saddle
		1			74			*X5	Saddle
	0QW081C3AA	1	J, T		74			*DL	Mist Gray
	0QW081T6AA	1	J, T		74			*DL	Saddle
	0QW101C3AA	1	J		74			*DL	Mist Gray, Export
		1	B		74			*DL	Mist Gray, Export
	0QW101T6AA	1	J		74			*DL	Saddle, Export
		1	B		74			*DL	Saddle, Export
	0QW251C3AA	1			72			*M5	Mist Gray

CHEROKEE (XJ)

SERIES	LINE	BODY	ENGINE	TRANSMISSION
L = LOWLINE	T = JEEP - 2WD B = JEEP - 2WD (RHD) J = JEEP - 4WD U = JEEP - 4WD (RHD)	72 = SPORT UTILITY 2-DR 74 = SPORT UTILITY 4-DR	ENC = 2.5L 4 Cyl Turbo Diesel Engine EPB = 2.5L 4 Cylinder Engine EPE = Engine - 2.5L Power Tech I-4 Cyl. ERH = 4.0L Power Tech I-6 Engine	DDQ = 5-Speed Manual Transmission DGS = 4-Speed Automatic AW4 Transmission DGO = ALL AUTOMATIC TRANSMISSIONS DBB = ALL MANUAL TRANSMISSIONS

Covers, seat Upholstery
Figure IXJ-620

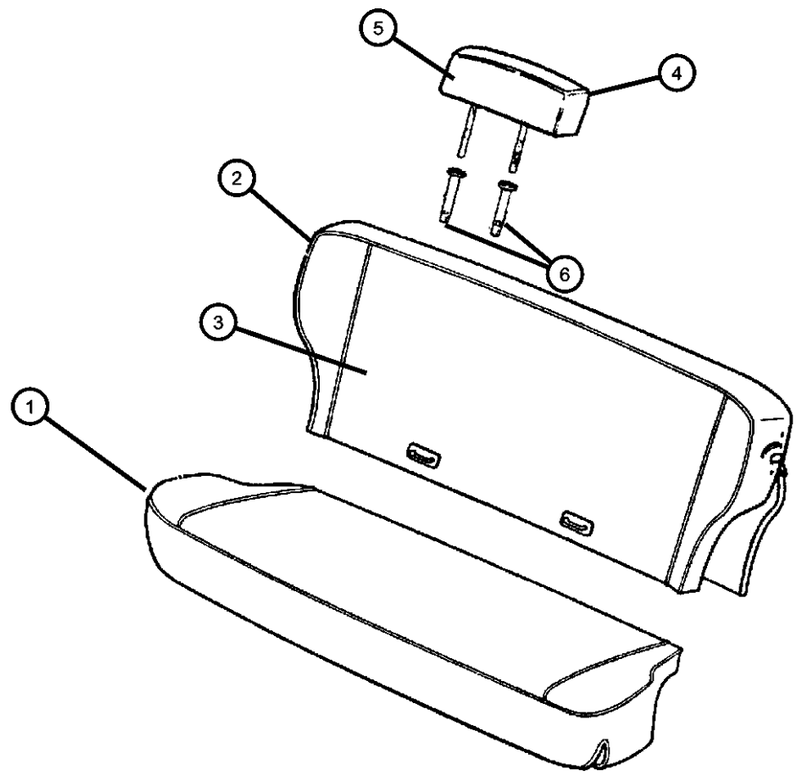

ITEM	PART NUMBER	QTY	LINE	SERIES	BODY	ENGINE	TRANS	TRIM	DESCRIPTION
		1			74			*M5	Mist Gray
	0QW251T6AA	1			72			*M5	Saddle
		1			74			*M5	Saddle
	0QW471C3AA	1			74			*XJ	Mist Gray
	0QW531C3AA	1	J		72			*XJ	Mist Gray, Export
		1	J		74			*XJ	Mist Gray, Export
		1	B		74			*XJ	Mist Gray, Export
	0QW531T6AA	1	J		72			*XJ	Saddle, Export
		1	J		74			*XJ	Saddle, Export
		1	B		72			*XJ	Saddle, Export
		1	B		74			*XJ	Saddle, Export
3									COVER, Rear Seat Back
	0QV991C3AA	1			72			*B6	Mist Gray
		1			74			*B6	Mist Gray
		1			74			*X5	Mist Gray
	0QV991T6AA	1			72			*B6	Saddle
		1			74			*B6	Saddle
		1			74			*X5	Saddle
	0QW091C3AA	1			74			*DL	Mist Gray
	0QW091T6AA	1			74			*DL	Saddle
	0QW111C3AA	1	J		74			*DL	Mist Gray, Export
		1	B		74			*DL	Mist Gray, Export
	0QW111T6AA	1	J		74			*DL	Saddle, Export
		1	B		74			*DL	Saddle, Export
	0QW421C3AA	1			72			*M5	Mist Gray
		1			74			*M5	Mist Gray
	0QW421T6AA	1			72			*M5	Saddle
		1			74			*M5	Saddle
	0QW521C3AA	1			74			*XJ	Mist Gray
	0QW521T6AA	1			74			*XJ	Saddle
	0QW601C3AA	1	J		72			*XJ	Mist Gray, Export
		1	B		72			*XJ	Mist Gray, Export
	0QW601T6AA	1	J		72			*XJ	Saddle, Export

CHEROKEE (XJ)

SERIES	LINE	BODY	ENGINE	TRANSMISSION
L = LOWLINE	T = JEEP - 2WD B = JEEP - 2WD (RHD) J = JEEP - 4WD U = JEEP - 4WD (RHD)	72 = SPORT UTILITY 2-DR 74 = SPORT UTILITY 4-DR	ENC = 2.5L 4 Cyl Turbo Diesel Engine EPB = 2.5L 4 Cylinder Engine EPE = Engine - 2.5L Power Tech I-4 Cyl. ERH = 4.0L Power Tech I-6 Engine	DDQ = 5-Speed Manual Transmission DGS = 4-Speed Automatic AW4 Transmission DGO = ALL AUTOMATIC TRANSMISSIONS DBB = ALL MANUAL TRANSMISSIONS

Covers, seat Upholstery
Figure IXJ-620

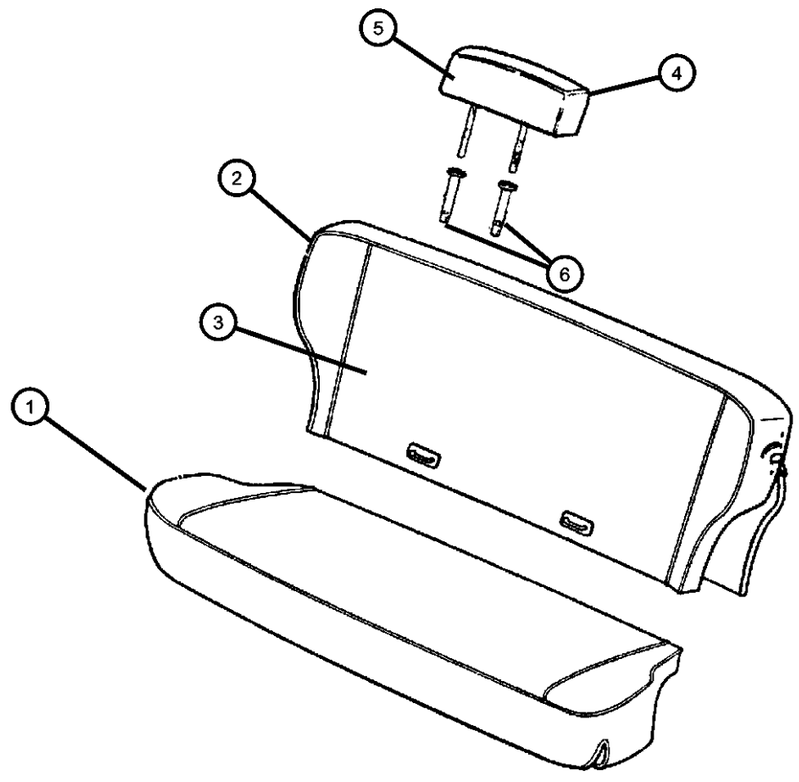

ITEM	PART NUMBER	QTY	LINE	SERIES	BODY	ENGINE	TRANS	TRIM	DESCRIPTION
		1	B		72			*XJ	Saddle, Export
4									HEADREST, Rear
	0QW191C3AA	2	J		74			*DL	Mist Gray, Export
		2	B		74			*DL	Mist Gray, Export
	0QW191T6AA	2	J		74			*DL	Saddle, Export
		2	B		74			*DL	Saddle, Export
	0QW641C3AA	2	J		72			*XJ	Mist Gray, Export
		2	J		74			*XJ	Mist Gray, Export
		2	B		72			*XJ	Mist Gray, Export
		2	B		74			*XJ	Mist Gray, Export
	0QW641T6AA	2	J		72			*XJ	Saddle, Export
		2	J		74			*XJ	Saddle, Export
		2	B		72			*XJ	Saddle, Export
		2	B		74			*XJ	Saddle, Export
5									COVER, Seat Headrest
	0QW211T6AA	1	J		74			*DL	Saddle, Export
	0QW661C3AA	2	J		72			*XJ	Mist Gray, Export
		2	J		74			*XJ	Mist Gray, Export
		2	B		72			*XJ	Mist Gray, Export
		2	B		74			*XJ	Mist Gray, Export
	0QW661T6AA	2	J		72			*XJ	Saddle, Export
		2	J		74			*XJ	Saddle, Export
		2	B		72			*XJ	Saddle, Export
		2	B		74			*XJ	Saddle, Export
6									CYLINDER, Headrest
	04723834	2			74			*DL	
		1			74			*XJ	
		1	J, T		72			*XJ	
		1	B, U		72			*XJ	
-7	05003422AA	1							TETHER PACKAGE, Child Seat

CHEROKEE (XJ)

SERIES	LINE	BODY	ENGINE	TRANSMISSION
L = LOWLINE	T = JEEP - 2WD B = JEEP - 2WD (RHD) J = JEEP - 4WD U = JEEP - 4WD (RHD)	72 = SPORT UTILITY 2-DR 74 = SPORT UTILITY 4-DR	ENC = 2.5L 4 Cyl Turbo Diesel Engine EPB = 2.5L 4 Cylinder Engine EPE = Engine - 2.5L Power Tech I-4 Cyl. ERH = 4.0L Power Tech I-6 Engine	DDQ = 5-Speed Manual Transmission DGS = 4-Speed Automatic AW4 Transmission DGO = ALL AUTOMATIC TRANSMISSIONS DBB = ALL MANUAL TRANSMISSIONS

Seat Belts, Front Seat
Figure IXJ-710

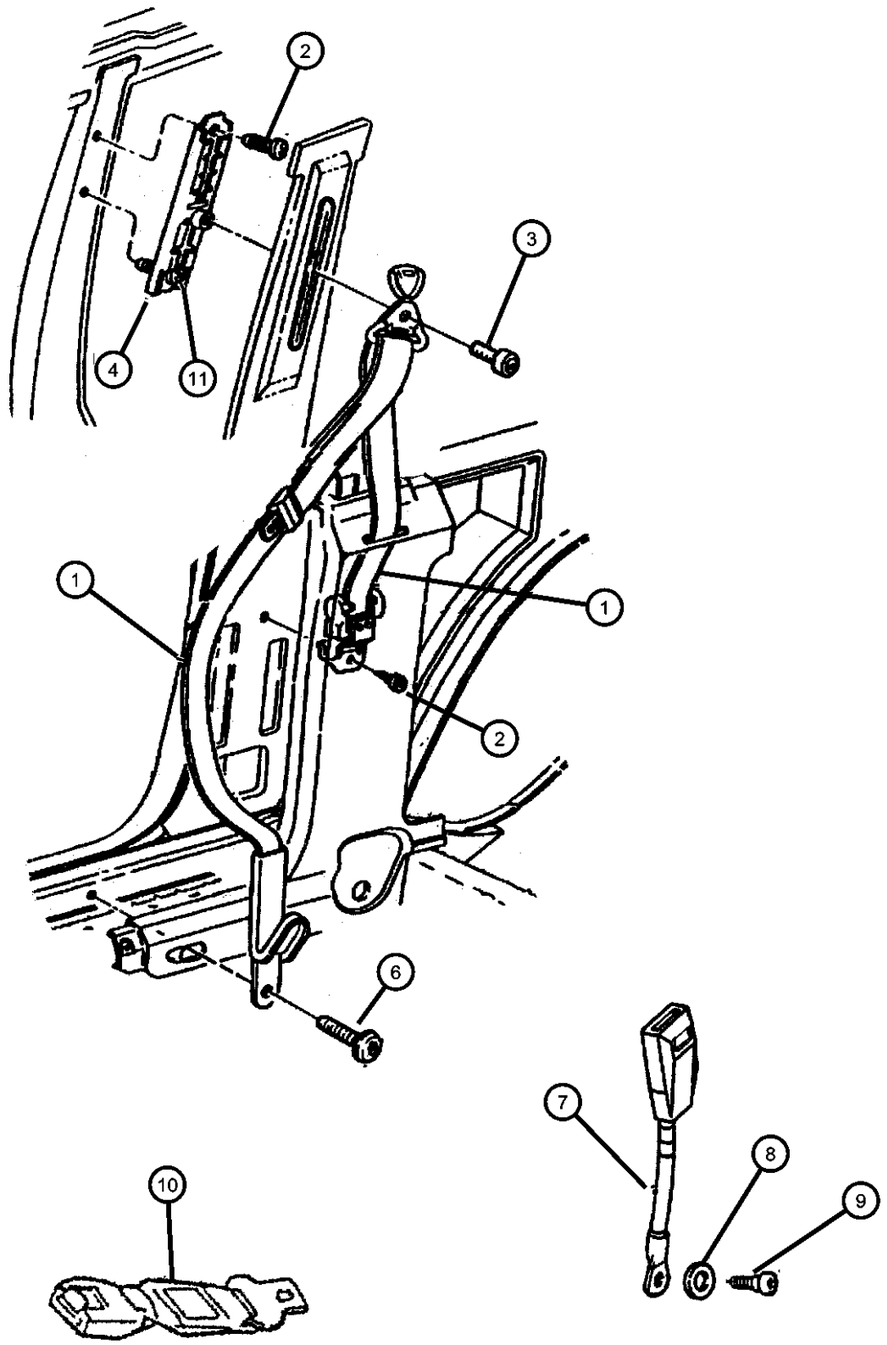

ITEM	PART NUMBER	QTY	LINE	SERIES	BODY	ENGINE	TRANS	TRIM	DESCRIPTION
1									SEAT BELT, Front Outer
	55217140	2	J, U		72				Export
	5EZ14LAZAB	1			72			*O0	Right
	5EZ15LAZAB	1			72			*O0	Left
2	06034384	2							SCREW, Pan Head, .437-20x1.15
3	06034457	2			72				SCREW, Pan Head, .437-20x1.375
4	55314697AB	2	J, U						ADJUSTER, Seat Belt Turning Loop
-5	55352693AA	2			72				SPACER
6	06034398	2			72				SCREW, Pan Head
7									SEAT BELT, Front Inner
	55217188	1	J, T		72			*XJ	Manual Seats, Right
	55217189	1	J, T		72			*XJ	Manual Seats, Left
		1	B, U		72			*XJ	Manual Seats, Left
	55314868	1	J, T		72			*XJ	Power Seats, Right
	55314869	1	J, T		72			*XJ	Power Seats, Left
		1	B, U		72			*XJ	Power Seats, Left
	55352609	1	B, U		72			*XJ	Power Seats, Right
	55352612	1	B, U		72			*XJ	Manual Seats, Right
	5EE52LAZ	1			72			*B6	Manual Seats, Right
		1			72			*M5	Manual Seats, Right
	5EE53LAZ	1			72			*B6	Manual Seats, Left
		1			72			*M5	Manual Seats, Left
	5FS25LAZ	1	J, T		72			*M5	Power Seats, Left
8									WASHER, Seat Belt Attaching
	04798898	1	J, T		72			*XJ	
		1	B, U		72			*XJ	
9									SCREW, Button Head, .375-24x.62
	06035115	2			72			*B6	
		2			72			*M5	
		2	B		72			*XJ	
		2	J, T		72			*XJ	
10	04740415	1							EXTENDER, Seat Belt
11	06502985	2	J, U						SCREW, Hex Head, M10x1.5x30

CHEROKEE (XJ)

SERIES	LINE	BODY	ENGINE	TRANSMISSION
L = LOWLINE	T = JEEP - 2WD B = JEEP - 2WD (RHD) J = JEEP - 4WD U = JEEP - 4WD (RHD)	72 = SPORT UTILITY 2-DR 74 = SPORT UTILITY 4-DR	ENC = 2.5L 4 Cyl Turbo Diesel Engine EPB = 2.5L 4 Cylinder Engine EPE = Engine - 2.5L Power Tech I-4 Cyl. ERH = 4.0L Power Tech I-6 Engine	DDQ = 5-Speed Manual Transmission DGS = 4-Speed Automatic AW4 Transmission DGO = ALL AUTOMATIC TRANSMISSIONS DBB = ALL MANUAL TRANSMISSIONS

Seat Belts, Front Seat
Figure IXJ-720

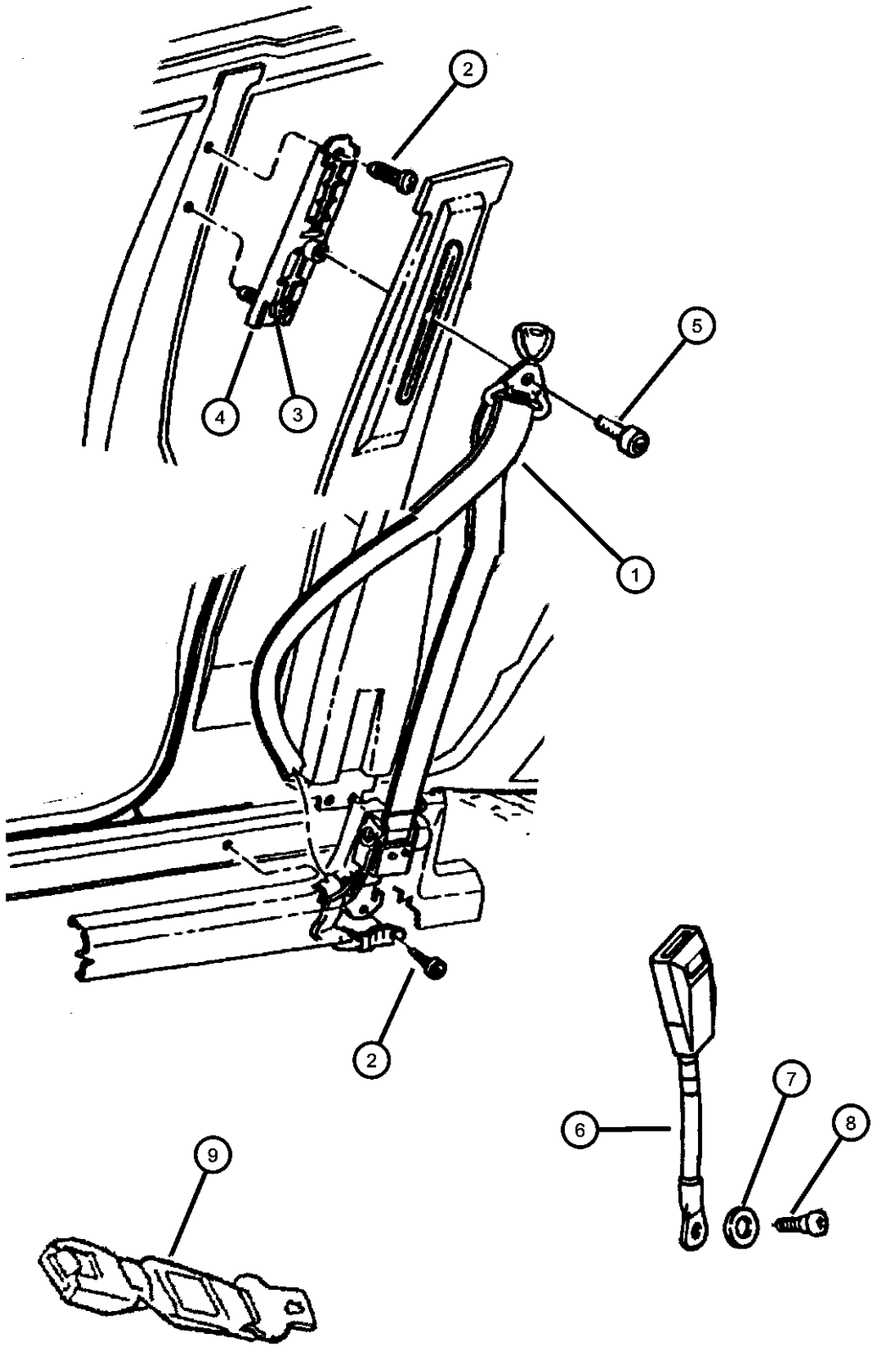

ITEM	PART NUMBER	QTY	LINE	SERIES	BODY	ENGINE	TRANS	TRIM	DESCRIPTION
1									SEAT BELT, Front Outer
	55217142	1	J, U		74				Right, Export
	55217143	1	J, U		74				Left, Export
	5FM30LAZAB	1			74			*O0	Right
	5FM31LAZAB	1			74			*O0	Left
2	06034384	2							SCREW, Pan Head, .437-20x1.15
3	06502985	2	J, U						SCREW, Hex Head, M10x1.5x30
4	55314697AB	2	J, U						ADJUSTER, Seat Belt Turning Loop
5	06034457	2	J						SCREW, Pan Head, .437-20x1.375
6									SEAT BELT, Front Inner
	55217188	1	J, T		74			*XJ	Manual Seats, Right, Export
	55217189	1	J, T		74			*XJ	Manual Seats, Left, Export
		1	B, U		74			*XJ	Manual Seats, Left, Export
	55314868	1	J, T		74			*DL	Power Seats, Right, Export
	55314869	1	J, T		74			*DL	Power Seats, Left, Export
		1	B, U		74			*DL	Power Seats, Left, Export
	5FS25LAZ	1			74			*DL	Power Seats, Left
		1			74			*XJ	Power Seats, Left
	55352609	1	B		74			*XJ	Power Seats, Right
		1	B, U		74			*DL	Power Seats, Right
	55352612	1	B, U		74			*XJ	Manual Seats, Right
	5EE52LAZ	1			74			*B6	Manual Seats, Right
		1			74			*M5	Manual Seats, Right
		1			74			*DL	Manual Seats, Right
		1			74			*XJ	Manual Seats, Right
	5EE53LAZ	1			74			*B6	Manual Seats, Left
		1			74			*M5	Manual Seats, Left
		1			74			*XJ	Manual Seats, Left
		1	J, T		74			*M5	Power Seats, Left
	5GA121AZAA	1	B, U		74			*M5	With Postal Package, Right
	5GA131AZAA	1	B, U		74			*M5	With Postal Package, Left
		1	B, U		74			*B6	With Postal Package, Left
7									WASHER, Seat Belt Attaching

CHEROKEE (XJ)

SERIES	LINE	BODY	ENGINE	TRANSMISSION
L = LOWLINE	T = JEEP - 2WD B = JEEP - 2WD (RHD) J = JEEP - 4WD U = JEEP - 4WD (RHD)	72 = SPORT UTILITY 2-DR 74 = SPORT UTILITY 4-DR	ENC = 2.5L 4 Cyl Turbo Diesel Engine EPB = 2.5L 4 Cylinder Engine EPE = Engine - 2.5L Power Tech I-4 Cyl. ERH = 4.0L Power Tech I-6 Engine	DDQ = 5-Speed Manual Transmission DGS = 4-Speed Automatic AW4 Transmission DGO = ALL AUTOMATIC TRANSMISSIONS DBB = ALL MANUAL TRANSMISSIONS

Seat Belts, Front Seat
Figure IXJ-720

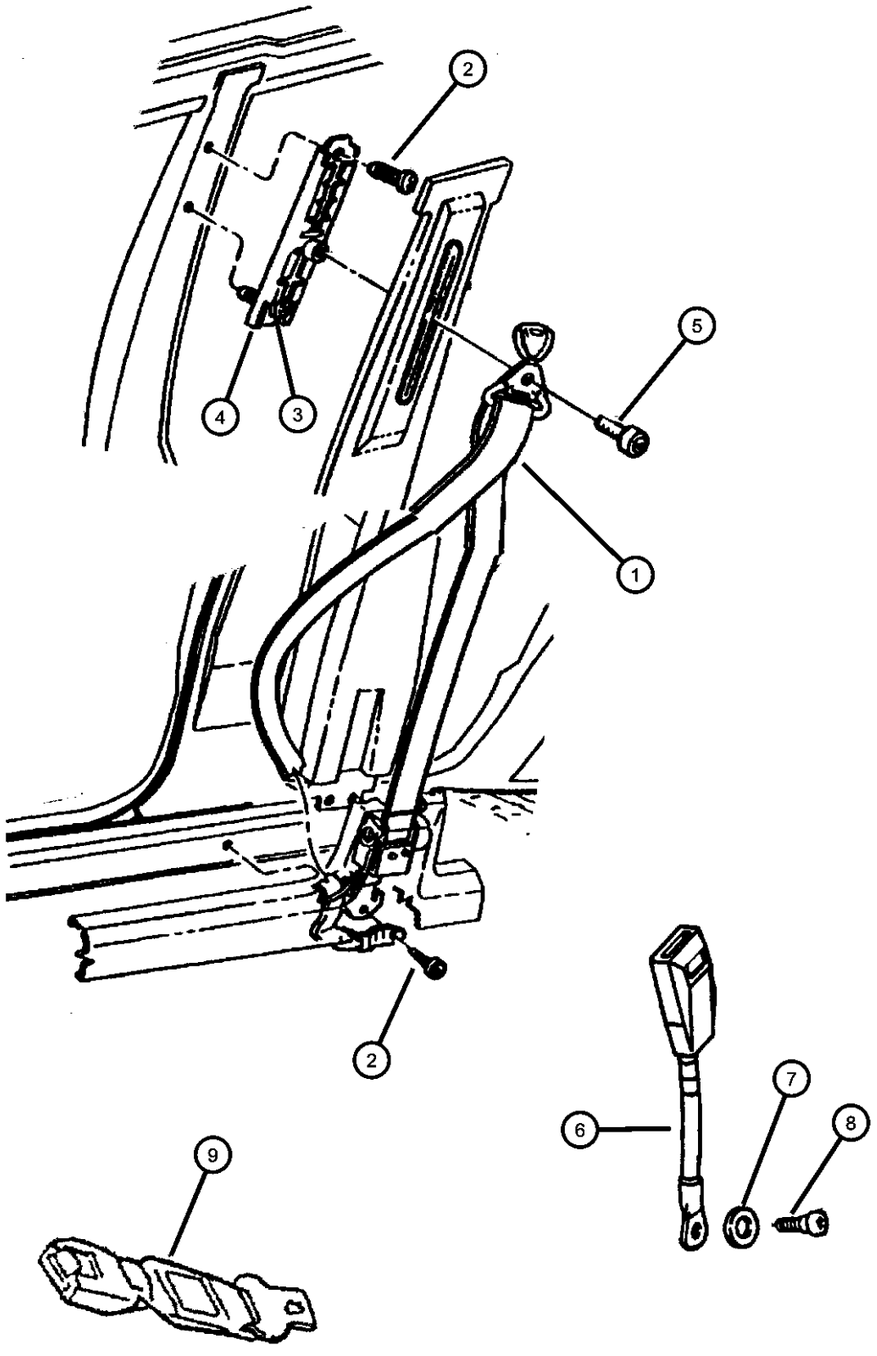

ITEM	PART NUMBER	QTY	LINE	SERIES	BODY	ENGINE	TRANS	TRIM	DESCRIPTION
	04798898	2	J		74			*XJ	
		2	B		74			*XJ	
		1	J, T		74			*DL	
		1	B, U		74			*DL	
8									SCREW, Button Head, .375-24x.62
	06035115	2			74			*B6	
		2			74			*M5	
		2			74			*DL	
		2			74			*XJ	
		2			74			*X5	
9	04740415	1							EXTENDER, Seat Belt

CHEROKEE (XJ)

SERIES	LINE	BODY	ENGINE	TRANSMISSION
L = LOWLINE	T = JEEP - 2WD B = JEEP - 2WD (RHD) J = JEEP - 4WD U = JEEP - 4WD (RHD)	72 = SPORT UTILITY 2-DR 74 = SPORT UTILITY 4-DR	ENC = 2.5L 4 Cyl Turbo Diesel Engine EPB = 2.5L 4 Cylinder Engine EPE = Engine - 2.5L Power Tech I-4 Cyl. ERH = 4.0L Power Tech I-6 Engine	DDQ = 5-Speed Manual Transmission DGS = 4-Speed Automatic AW4 Transmission DGO = ALL AUTOMATIC TRANSMISSIONS DBB = ALL MANUAL TRANSMISSIONS

Seat Belts, Rear Seats
Figure IXJ-730

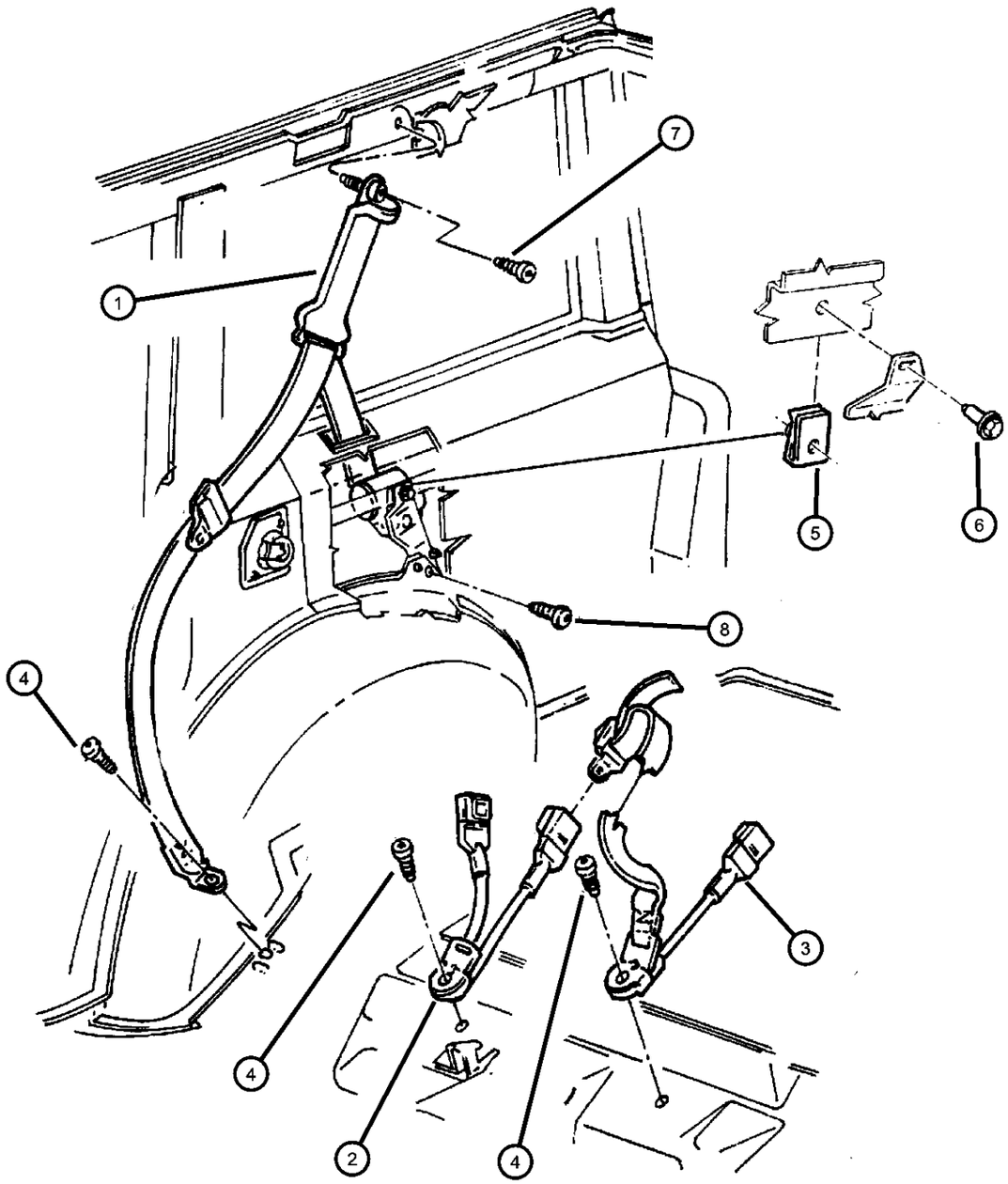

ITEM	PART NUMBER	QTY	LINE	SERIES	BODY	ENGINE	TRANS	TRIM	DESCRIPTION
1									SEAT BELT, Outer
	55217146AB	1							EUROPE, Right
	55217147AB	1							EUROPE, Left
	5FG521C3AC	1						*O0	Mist Gray, Right
	5FG521T6AC	1						*O0	Saddle, Right
	5FG531C3AB	1						*O0	Mist Gray, Left
	5FG531T6AB	1						*O0	Saddle, Left
2									SEAT BELT, Two Buckles
	5FG50SAZ	1						*O0	Right
	5FG50SX9	1						*O0	EUROPE, Right
3									SEAT BELT, Buckle And Tip
	5FG51SAZ	1						*O0	
	5FT53SX9	1						*O0	EUROPE
4	06034383	4							SCREW, Pan Head, .437-20x1.5
5	06504118	2							U-NUT, M6 x 1.00, M6x1.00
6	34201807	2							BOLT, Hex Flange Head, M6x1.00x16
7	06034389	1							SCREW, Pan Head Shoulder, .437-20x1.87
8	06034384	2							SCREW, Pan Head, .437-20x1.15
-9	05003422AB	1							TETHER PACKAGE, Child Seat

CHEROKEE (XJ)

SERIES	LINE	BODY	ENGINE	TRANSMISSION
L = LOWLINE	T = JEEP - 2WD B = JEEP - 2WD (RHD) J = JEEP - 4WD U = JEEP - 4WD (RHD)	72 = SPORT UTILITY 2-DR 74 = SPORT UTILITY 4-DR	ENC = 2.5L 4 Cyl Turbo Diesel Engine EPB = 2.5L 4 Cylinder Engine EPE = Engine - 2.5L Power Tech I-4 Cyl. ERH = 4.0L Power Tech I-6 Engine	DDQ = 5-Speed Manual Transmission DGS = 4-Speed Automatic AW4 Transmission DGO = ALL AUTOMATIC TRANSMISSIONS DBB = ALL MANUAL TRANSMISSIONS

Recliner and Adjuster
Figure IXJ-810

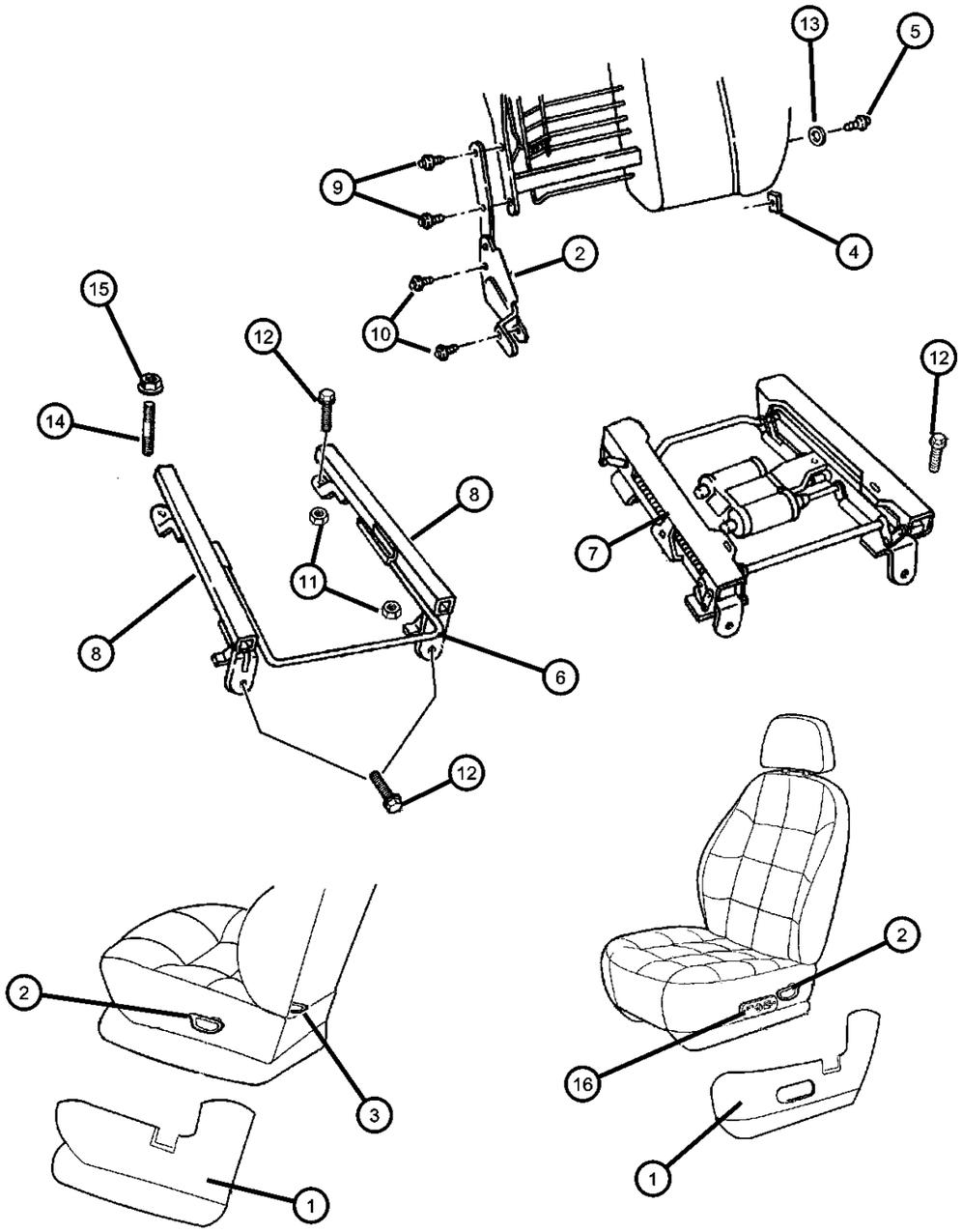

ITEM	PART NUMBER	QTY	LINE	SERIES	BODY	ENGINE	TRANS	TRIM	DESCRIPTION
1									SHIELD, Seat Cushion
	0RA701C3AA	1	J		74			*XJ	Mist Gray, With Power, Right
		1	B		74			*XJ	Mist Gray, With Power, Right
		1	J, T		74			*DL	Mist Gray, With Power, Right
		1	J, T		72			*XJ	Mist Gray, With Power, Right
		1	B, U		74			*DL	Mist Gray, With Power, Right
		1	B, U		72			*XJ	Mist Gray, With Power, Right
	0RA701T6AA	1	J		74			*XJ	Saddle, With Power, Right
		1	B		74			*XJ	Saddle, With Power, Right
		1	J, T		74			*DL	Saddle, With Power, Right
		1	J, T		72			*XJ	Saddle, With Power, Right
		1	B, U		74			*DL	Saddle, With Power, Right
		1	B, U		72			*XJ	Saddle, With Power, Right
	0RA711C3AA	1			74			*DL	Mist Gray, With Power, Left
		1			74			*XJ	Mist Gray, With Power, Left
		1	J, T		72			*XJ	Mist Gray, With Power, Left
		1	B, U		72			*M5	Mist Gray, With Power, Left
		1	B, U		74			*M5	Mist Gray, With Power, Left
		1	B, U		72			*XJ	Mist Gray, With Power, Left
	0RA711T6AA	1			74			*DL	Saddle, With Power, Left
		1			74			*XJ	Saddle, With Power, Left
		1	J, T		72			*XJ	Saddle, With Power
		1	B, U		72			*M5	Saddle, With Power, Left
		1	B, U		74			*M5	Saddle, With Power, Left
		1	B, U		72			*XJ	Saddle, With Power, Left
	0RA721C3AA	1			72			*B6	Mist Gray, Manual, Right
		1			74			*B6	Mist Gray, Manual, Right
		1			72			*M5	Mist Gray, Manual, Right
		1			74			*M5	Mist Gray, Manual, Right
		1	J, T		72			*XJ	Mist Gray, Manual, Right
		1	B, U		72			*XJ	Mist Gray, Manual, Right
		1			74			*X5	Mist Gray, Manual, Right
		1			74			*DL	Mist Gray, Manual, Right

CHEROKEE (XJ)

SERIES	LINE	BODY	ENGINE	TRANSMISSION
L = LOWLINE	T = JEEP - 2WD B = JEEP - 2WD (RHD) J = JEEP - 4WD U = JEEP - 4WD (RHD)	72 = SPORT UTILITY 2-DR 74 = SPORT UTILITY 4-DR	ENC = 2.5L 4 Cyl Turbo Diesel Engine EPB = 2.5L 4 Cylinder Engine EPE = Engine - 2.5L Power Tech I-4 Cyl. ERH = 4.0L Power Tech I-6 Engine	DDQ = 5-Speed Manual Transmission DGS = 4-Speed Automatic AW4 Transmission DGO = ALL AUTOMATIC TRANSMISSIONS DBB = ALL MANUAL TRANSMISSIONS

AR = use ase required - = Non illustrrated part

Recliner and Adjuster
Figure IXJ-810

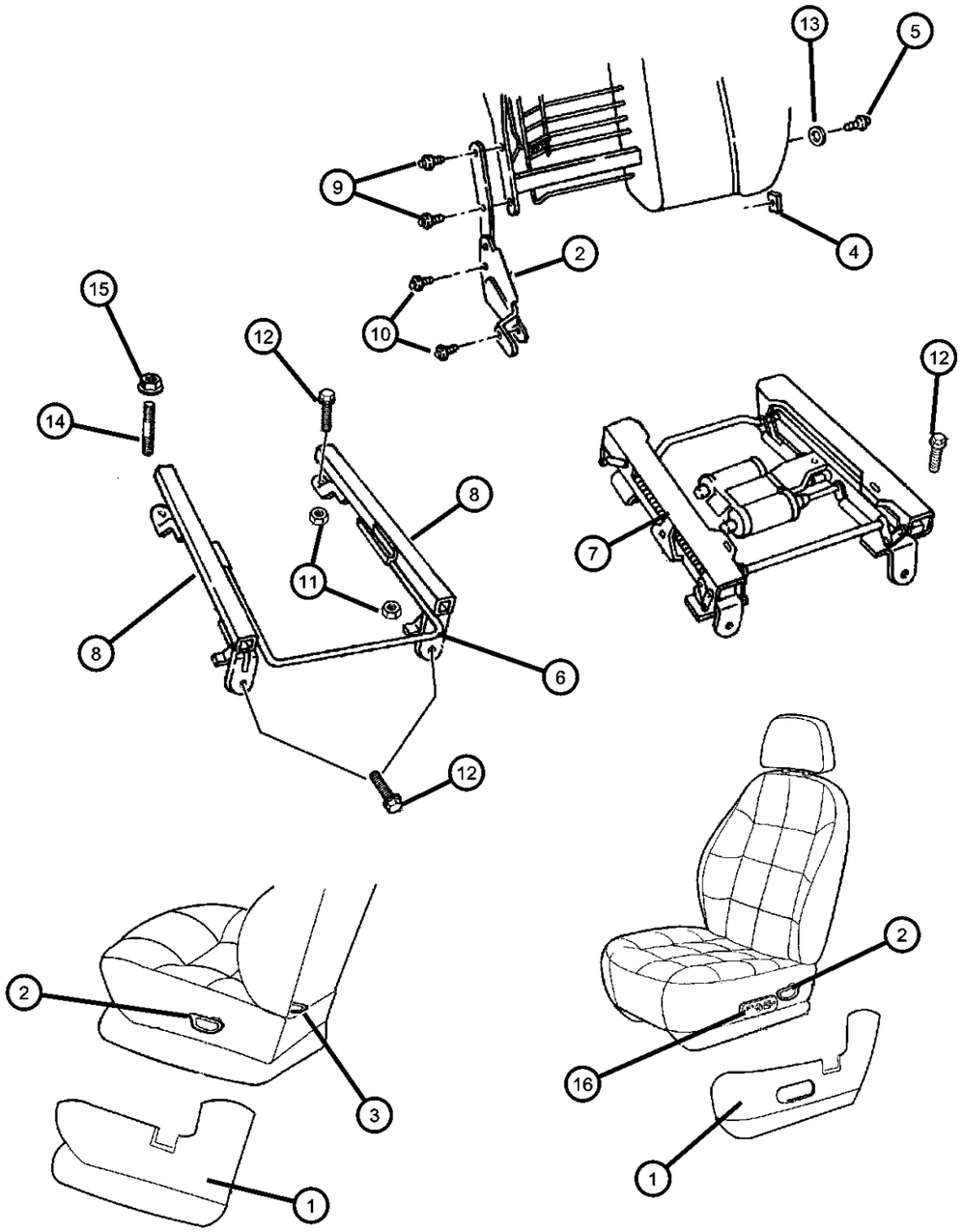

ITEM	PART NUMBER	QTY	LINE	SERIES	BODY	ENGINE	TRANS	TRIM	DESCRIPTION
		1			74			*XJ	Mist Gray, Manual, Right
	0RA721T6AA	1			72			*B6	Saddle, Manual, Right
		1			74			*B6	Saddle, Manual, Right
		1			72			*M5	Saddle, Manual, Right
		1			74			*M5	Saddle, Manual, Right
		1			74			*XJ	Saddle, Manual, Right
		1	J, T		72			*XJ	Saddle, Manual, Right
		1	B, U		72			*XJ	Saddle, Manual, Right
		1			74			*X5	Saddle, Manual, Right
		1			74			*DL	Saddle, Manual, Right
	0RA731C3AA	1			72			*B6	Mist Gray, Manual, Left
		1			74			*B6	Mist Gray, Manual, Left
		1			72			*M5	Mist Gray, Manual, Left
		1			74			*M5	Mist Gray, Manual, Left
		1			74			*XJ	Mist Gray, Manual, Left
		1	J, T		72			*XJ	Mist Gray, Manual, Left
		1	B, U		72			*XJ	Mist Gray, Manual, Left
		1			74			*X5	Mist Gray, Manual, Left
	0RA731T6AA	1			72			*B6	Saddle, Manual, Left
		1			74			*B6	Saddle, Manual, Left
		1			72			*M5	Saddle, Manual, Left
		1			74			*M5	Saddle, Manual, Left
		1			74			*XJ	Saddle, Manual, Left
		1	J, T		72			*XJ	Saddle, Manual, Left
		1	B, U		72			*XJ	Saddle, Manual, Left
		1			74			*X5	Saddle, Manual, Left
2									RECLINER, Seat Back
	04796712	1			72			*B6	Right
		1			72			*M5	Right
		1	B		72			*XJ	Right
		1	J, T		72			*XJ	Right
	04796713	1			72			*B6	Left
		1			72			*M5	Left

CHEROKEE (XJ)

SERIES	LINE	BODY	ENGINE	TRANSMISSION
L = LOWLINE	T = JEEP - 2WD B = JEEP - 2WD (RHD) J = JEEP - 4WD U = JEEP - 4WD (RHD)	72 = SPORT UTILITY 2-DR 74 = SPORT UTILITY 4-DR	ENC = 2.5L 4 Cyl Turbo Diesel Engine EPB = 2.5L 4 Cylinder Engine EPE = Engine - 2.5L Power Tech I-4 Cyl. ERH = 4.0L Power Tech I-6 Engine	DDQ = 5-Speed Manual Transmission DGS = 4-Speed Automatic AW4 Transmission DGO = ALL AUTOMATIC TRANSMISSIONS DBB = ALL MANUAL TRANSMISSIONS

Recliner and Adjuster
Figure IXJ-810

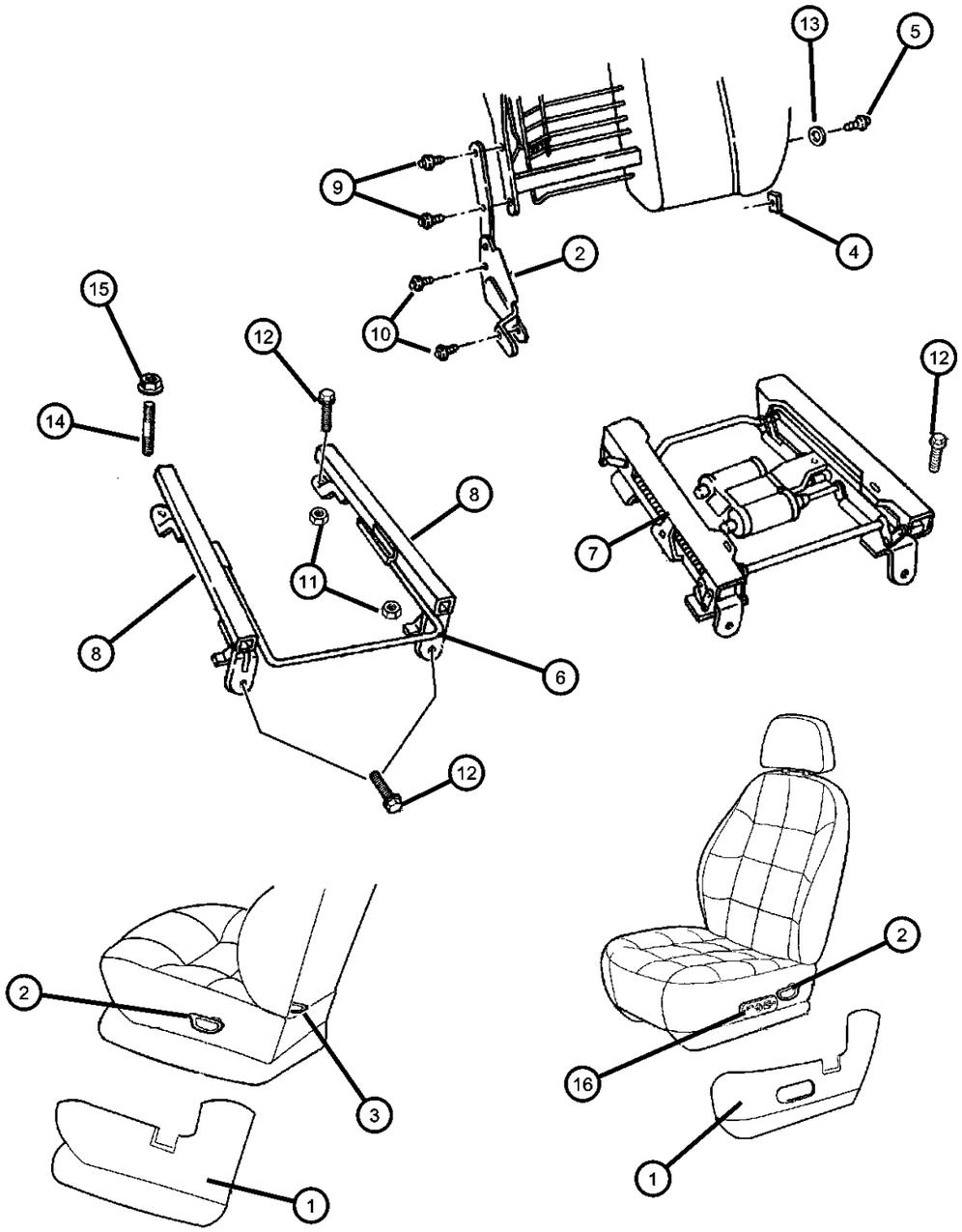

ITEM	PART NUMBER	QTY	LINE	SERIES	BODY	ENGINE	TRANS	TRIM	DESCRIPTION
		1	B		72			*XJ	Left
		1	J, T		72			*XJ	Left
	04796714	1			74			*B6	Includes Handle, Right
		1			74			*DL	Includes Handle, Right
		1			74			*M5	Includes Handle, Right
		1			74			*XJ	Includes Handle, Right
		1			74			*X5	Includes Handle, Right
	04796715	1			74			*B6	Includes Handle, Left
		1			74			*DL	Includes Handle, Left
		1			74			*M5	Includes Handle, Left
		1			74			*XJ	Includes Handle, Left
		1	J, T		74			*X5	Includes Handle, Left
3									KNOB, Seat Recliner
	04796720	2			72			*B6	
		2			72			*M5	
		2	B		72			*XJ	
		1	J, T		72			*XJ	
4									U-NUT, Seat Back
	04713982	2			72			*B6	
		2			74			*B6	
		2			74			*DL	
		2			74			*DL	
		2			72			*M5	
		2			74			*M5	
		2			74			*XJ	
		2	B		72			*XJ	
		2			74			*X5	
		1	J, T		72			*XJ	
5									BOLT, Shoulder, I.B.-Back To Cushion-Pivot
	04797554	2			72			*B6	
		2			74			*B6	
		2			74			*DL	
		2			72			*M5	

CHEROKEE (XJ)

SERIES	LINE	BODY	ENGINE	TRANSMISSION
L = LOWLINE	T = JEEP - 2WD B = JEEP - 2WD (RHD) J = JEEP - 4WD U = JEEP - 4WD (RHD)	72 = SPORT UTILITY 2-DR 74 = SPORT UTILITY 4-DR	ENC = 2.5L 4 Cyl Turbo Diesel Engine EPB = 2.5L 4 Cylinder Engine EPE = Engine - 2.5L Power Tech I-4 Cyl. ERH = 4.0L Power Tech I-6 Engine	DDQ = 5-Speed Manual Transmission DGS = 4-Speed Automatic AW4 Transmission DGO = ALL AUTOMATIC TRANSMISSIONS DBB = ALL MANUAL TRANSMISSIONS

Recliner and Adjuster
Figure IXJ-810

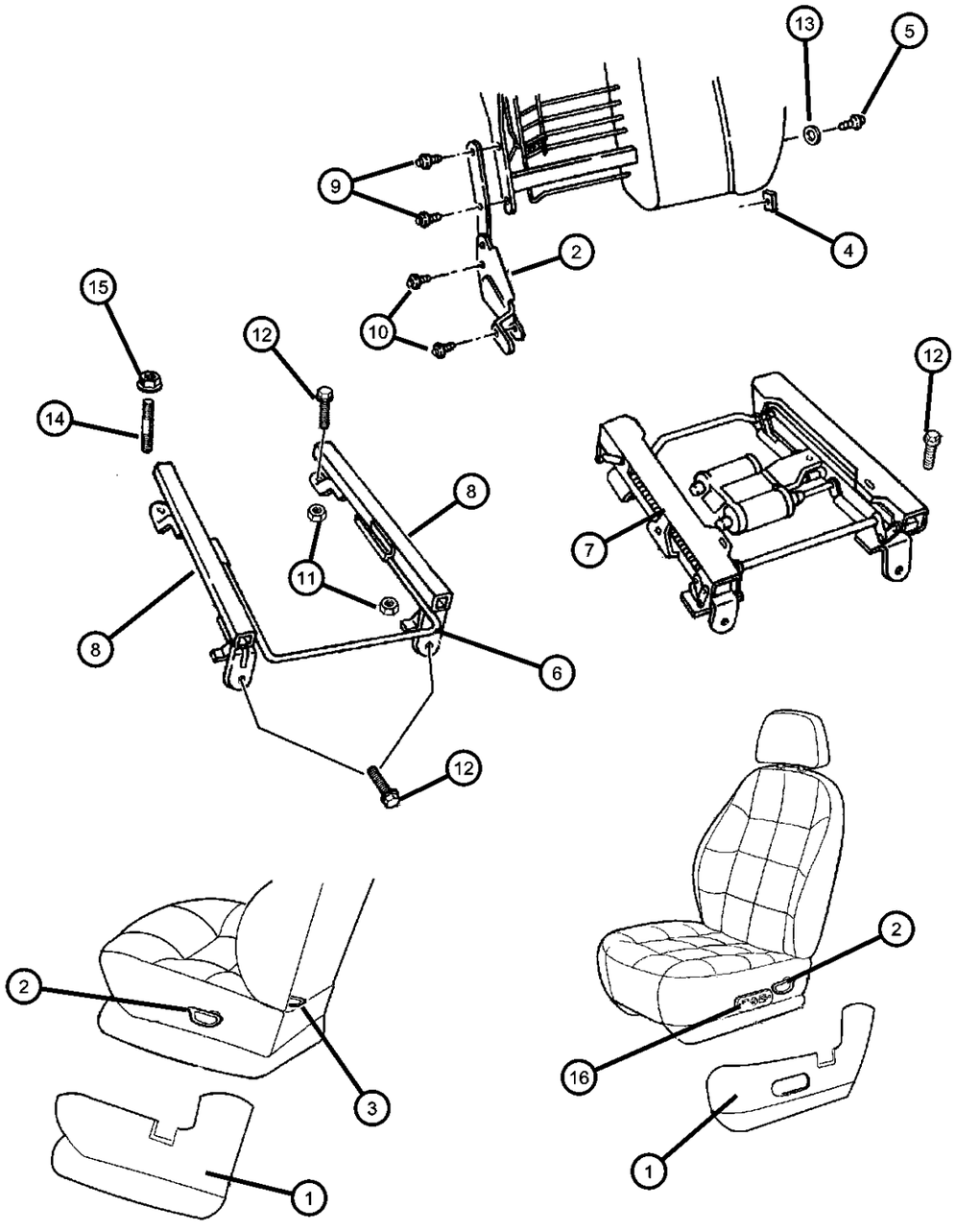

ITEM	PART NUMBER	QTY	LINE	SERIES	BODY	ENGINE	TRANS	TRIM	DESCRIPTION
		2			74			*M5	
		2			74			*XJ	
		2	B		72			*XJ	
		2			74			*X5	
		1	J, T		72			*XJ	
6									HANDLE, Seat Release
	04796780	2			72			*B6	
		2			74			*B6	
		1			74			*DL	
		2			72			*M5	
		2			74			*M5	
		1			74			*XJ	
		2	B		72			*XJ	
		2			74			*X5	
7									ADJUSTER, Power Seat, Includes Motor
	04886375AA	1	J		74			*XJ	Right
		1	B		74			*XJ	Right
		1	J, T		74			*DL	Right
		1	J, T		72			*XJ	Right
		1	B, U		74			*DL	Right
		1	B, U		72			*XJ	Right
	04886376AA	1			74			*DL	Left
		1			74			*XJ	Left
		1	J		72			*XJ	Left
		1	B		72			*XJ	Left
8									ADJUSTER, Manual Seat
	04796774	1			72			*B6	Driver, Outboard
		1			74			*B6	Driver, Outboard
		1			72			*M5	Driver, Outboard
		1			74			*M5	Driver, Outboard
		1			74			*XJ	Driver, Outboard
		1			74			*X5	Driver, Outboard

CHEROKEE (XJ)

SERIES	LINE	BODY	ENGINE	TRANSMISSION
L = LOWLINE	T = JEEP - 2WD B = JEEP - 2WD (RHD) J = JEEP - 4WD U = JEEP - 4WD (RHD)	72 = SPORT UTILITY 2-DR 74 = SPORT UTILITY 4-DR	ENC = 2.5L 4 Cyl Turbo Diesel Engine EPB = 2.5L 4 Cylinder Engine EPE = Engine - 2.5L Power Tech I-4 Cyl. ERH = 4.0L Power Tech I-6 Engine	DDQ = 5-Speed Manual Transmission DGS = 4-Speed Automatic AW4 Transmission DGO = ALL AUTOMATIC TRANSMISSIONS DBB = ALL MANUAL TRANSMISSIONS

Recliner and Adjuster
Figure IXJ-810

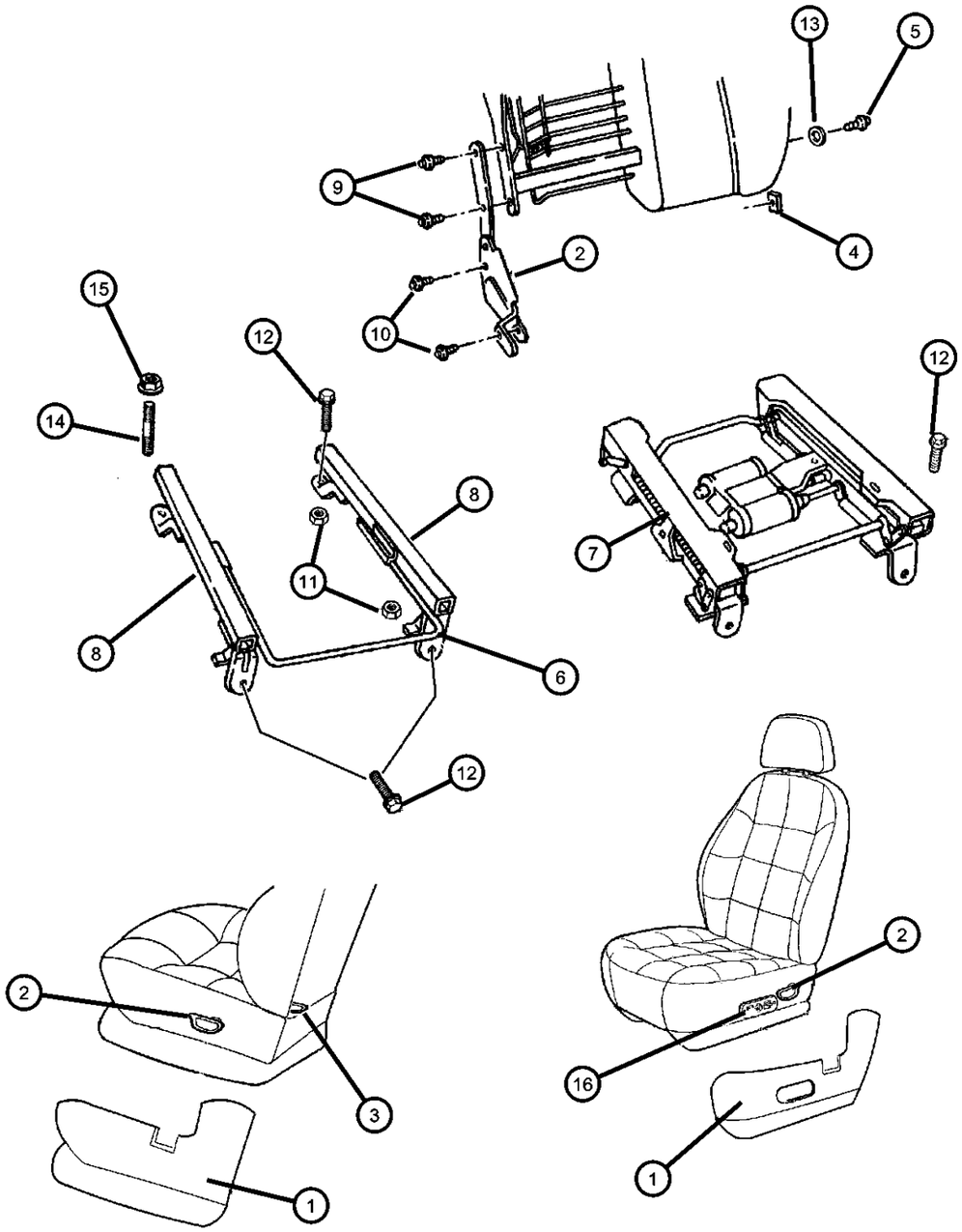

ITEM	PART NUMBER	QTY	LINE	SERIES	BODY	ENGINE	TRANS	TRIM	DESCRIPTION
		1	J, T		72			*XJ	Driver, Outboard
		1	B, U		72			*XJ	Driver, Outboard
	04796775	1			72			*B6	Driver, Inboard
		1			74			*B6	Driver, Inboard
		1			72			*M5	Driver, Inboard
		1			74			*M5	Driver, Inboard
		1			74			*XJ	Driver, Inboard
		1			74			*X5	Driver, Inboard
	04796776	1			72			*B6	Passenger, Outboard
		1			74			*B6	Passenger, Outboard
		1			74			*DL	Passenger, Outboard
		1			74			*M5	Passenger, Outboard
		1			74			*XJ	Passenger, Outboard
		1	B		72			*XJ	Passenger, Outboard
		1			74			*X5	Passenger, Outboard
		1	J, T		72			*XJ	Passenger, Outboard
		1	B, U		72			*M5	Passenger, Outboard
	04796777	1			72			*B6	Passenger, Inboard
		1			74			*B6	Passenger, Inboard
		1			74			*DL	Passenger, Inboard
		1			72			*M5	Passenger, Inboard
		1			74			*M5	Passenger, Inboard
		1			74			*XJ	Passenger, Inboard
		1			74			*X5	Passenger, Inboard
	04796794	1	J, T		72			*XJ	Passenger, Traveling Inboard Buckle, Export
		1	J, T		74			*XJ	Passenger, Traveling Inboard Buckle, Export
		1	B, U		72			*XJ	Passenger, Traveling Inboard Buckle, Export
		1	B, U		74			*XJ	Passenger, Traveling Inboard Buckle, Export
	04796795	1	J, T		72			*XJ	Driver, Traveling Inboard Buckle, Export
		1	J, T		74			*XJ	Driver, Traveling Inboard Buckle, Export

CHEROKEE (XJ)

SERIES	LINE	BODY	ENGINE	TRANSMISSION
L = LOWLINE	T = JEEP - 2WD B = JEEP - 2WD (RHD) J = JEEP - 4WD U = JEEP - 4WD (RHD)	72 = SPORT UTILITY 2-DR 74 = SPORT UTILITY 4-DR	ENC = 2.5L 4 Cyl Turbo Diesel Engine EPB = 2.5L 4 Cylinder Engine EPE = Engine - 2.5L Power Tech I-4 Cyl. ERH = 4.0L Power Tech I-6 Engine	DDQ = 5-Speed Manual Transmission DGS = 4-Speed Automatic AW4 Transmission DGO = ALL AUTOMATIC TRANSMISSIONS DBB = ALL MANUAL TRANSMISSIONS

AR = use ase required - = Non illustrrated part

Recliner and Adjuster
Figure IXJ-810

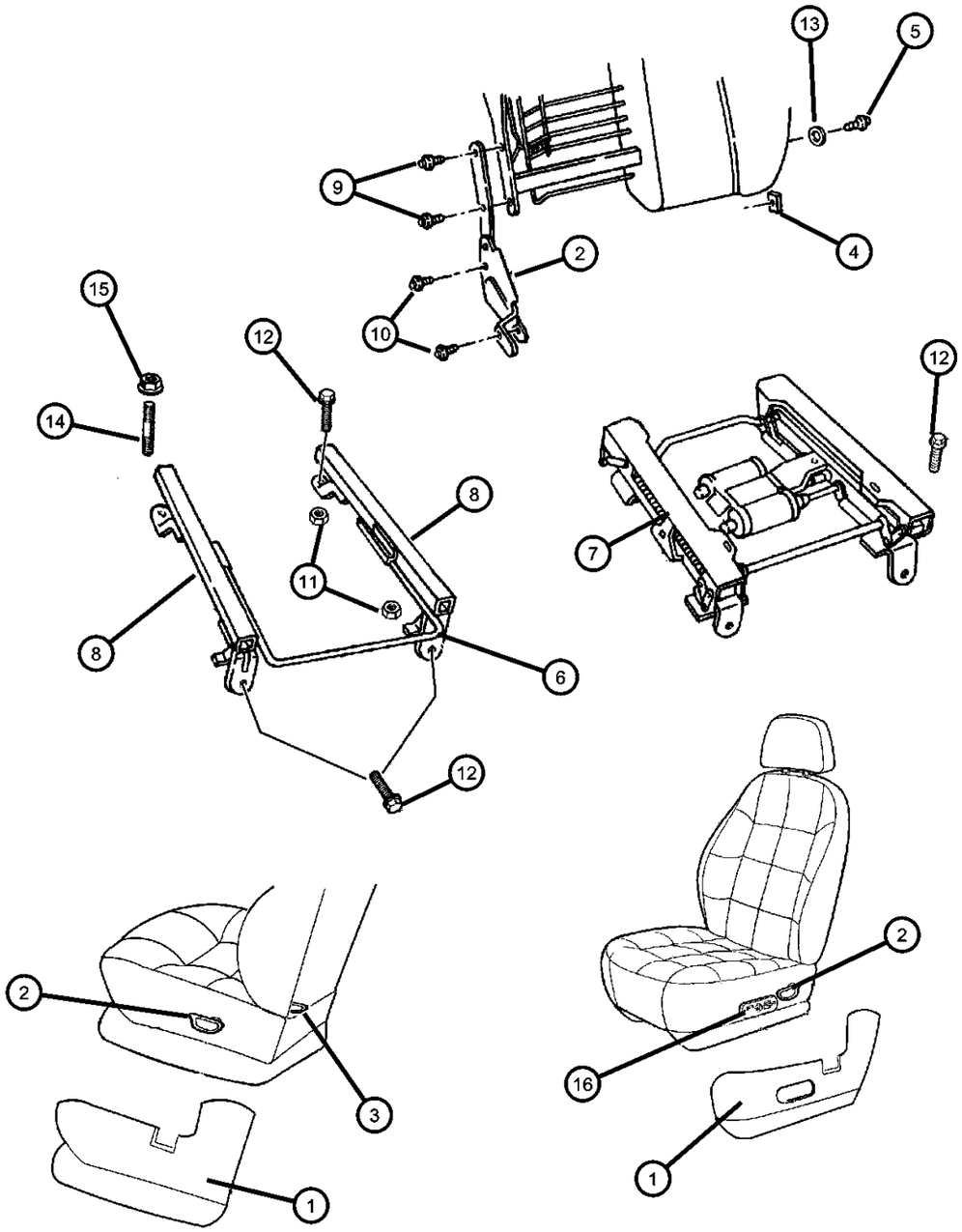

ITEM	PART NUMBER	QTY	LINE	SERIES	BODY	ENGINE	TRANS	TRIM	DESCRIPTION
		1	B, U		72			*XJ	Driver, Traveling Inboard Buckle, Export
		1	B, U		74			*XJ	Driver, Traveling Inboard Buckle, Export
9									BOLT, Recliner to Seat Back
	04720768	4			72			*B6	
		4			74			*B6	
		4			74			*DL	
		4			72			*M5	
		4			74			*M5	
		4			74			*XJ	
		4	J		72			*XJ	
		4	B		72			*XJ	
10									BOLT, Recliner To Cushion, Front Seat
	04796793	4			72			*B6	
		4			74			*B6	
		4			74			*DL	
		4			72			*M5	
		4			74			*M5	
		4			74			*XJ	
		4	J		72			*XJ	
		4	B		72			*XJ	
		4			74			*X5	
		1	J, T		72			*XJ	
11	05101925AA	8						*O0	NUT, Seat Adjuster To Cushion
12	06504071	6							SCREW AND WASHER, Hex Head Tap, M8x1.25x33.00
13	06504071	6							WASHER, (NOT SERVICED)
14	06504071	6							STUD, (NOT SERVICED)
15	00152477	2							NUT, Hex Flange Lock, .437-20
16									SWITCH, Seat
	04373666	2			72				
		1			74				

CHEROKEE (XJ)

SERIES	LINE	BODY	ENGINE	TRANSMISSION
L = LOWLINE	T = JEEP - 2WD B = JEEP - 2WD (RHD) J = JEEP - 4WD U = JEEP - 4WD (RHD)	72 = SPORT UTILITY 2-DR 74 = SPORT UTILITY 4-DR	ENC = 2.5L 4 Cyl Turbo Diesel Engine EPB = 2.5L 4 Cylinder Engine EPE = Engine - 2.5L Power Tech I-4 Cyl. ERH = 4.0L Power Tech I-6 Engine	DDQ = 5-Speed Manual Transmission DGS = 4-Speed Automatic AW4 Transmission DGO = ALL AUTOMATIC TRANSMISSIONS DBB = ALL MANUAL TRANSMISSIONS

Liftgate Trim Panel
Figure IXJ-1010

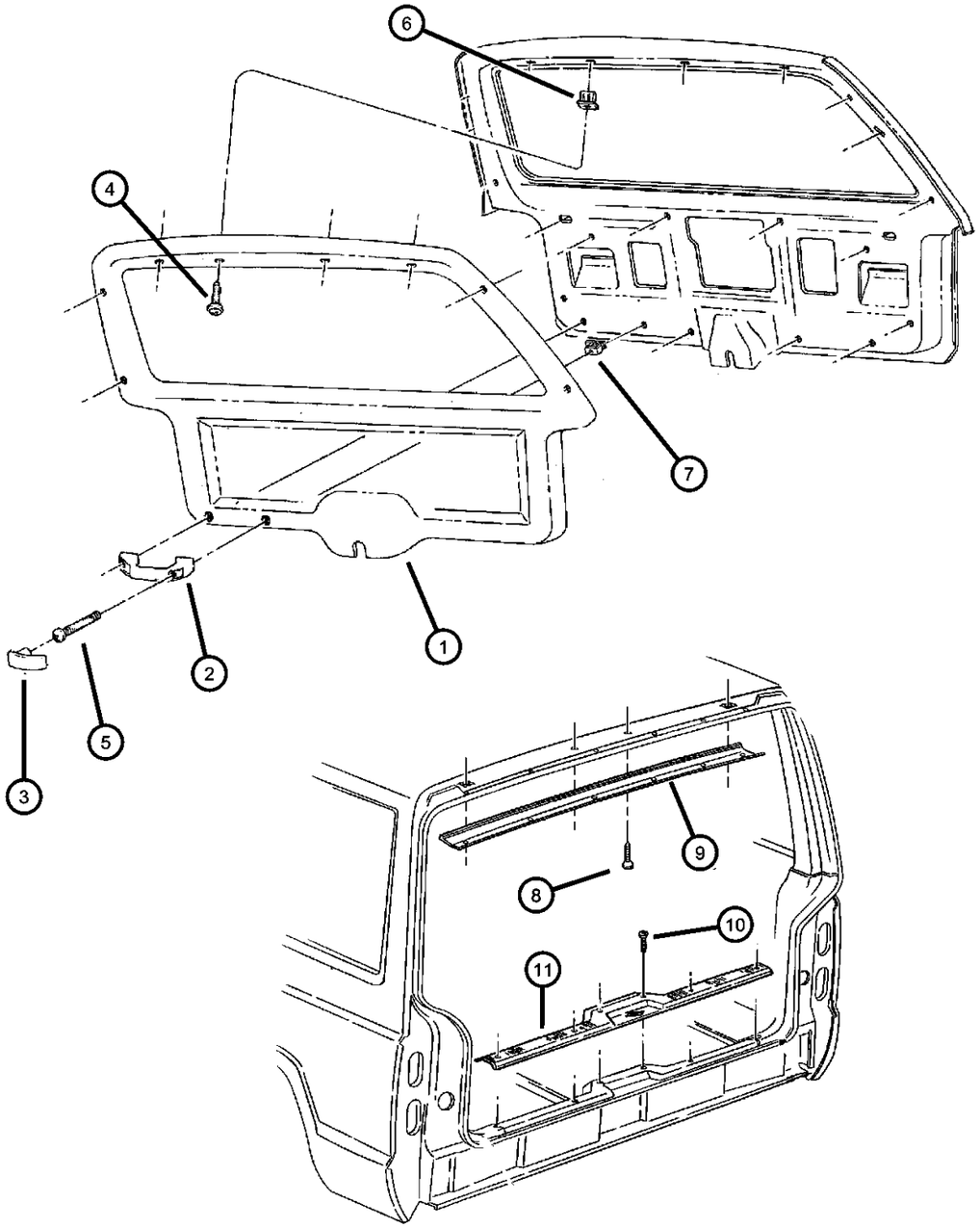

ITEM	PART NUMBER	QTY	LINE	SERIES	BODY	ENGINE	TRANS	TRIM	DESCRIPTION
P.A.R.= Paint As Required									
1	5EG06RT6	1						*O0	PANEL, Liftgate, P.A.R.
2									HANDLE, Roof Grab
	5DX76RT6	1						*O0	Saddle
	5DX76TC3	1						*O0	Mist Gray
3									PLUG, Assist and Grab Handle
	0H526RT6	1						*O0	Saddle
	0H526TC3	1						*O0	Mist Gray
4	0H526TC3	1							SCREW, .164-18x1.00, (NOT SERVICED),
5	0H526TC3	1							SCREW, .250-14x2.375, (NOT SERVICED)
6									NUT, Snap In, M4.2 x 1.41
	06505141AA	4							After 6-2-97, Spring
	34201872	2							Up to 6-2-97, Plastic
7	06029509	2							U-NUT, .250-14
8	06029509	2							SCREW, .164-18x.625, (NOT SERVICED)
9									MOLDING, Liftgate Upper
	5ER43RC3AB	1						*O0	Mist Gray
	5ER43RT6AB	1						*O0	Saddle
10	34201468	6							SCREW, Round Washer Head, M4.2x1.41x25.00
11									SILL COVER, Interior
	5EG09RC3	1						*O0	Mist Gray
	5EG09RT6	1						*O0	Saddle

CHEROKEE (XJ)

SERIES	LINE	BODY	ENGINE	TRANSMISSION
L = LOWLINE	T = JEEP - 2WD B = JEEP - 2WD (RHD) J = JEEP - 4WD U = JEEP - 4WD (RHD)	72 = SPORT UTILITY 2-DR 74 = SPORT UTILITY 4-DR	ENC = 2.5L 4 Cyl Turbo Diesel Engine EPB = 2.5L 4 Cylinder Engine EPE = Engine - 2.5L Power Tech I-4 Cyl. ERH = 4.0L Power Tech I-6 Engine	DDQ = 5-Speed Manual Transmission DGS = 4-Speed Automatic AW4 Transmission DGO = ALL AUTOMATIC TRANSMISSIONS DBB = ALL MANUAL TRANSMISSIONS

Group - SXJ

Body Sheet Metal Except Doors

SXJ-1100 Roof Panels 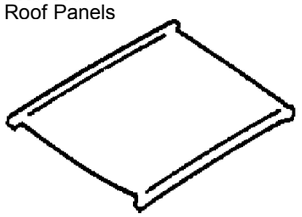	**SXJ-1300** Liftgate Panel 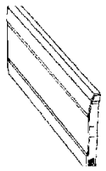	**SXJ-1600** Luggage Rack 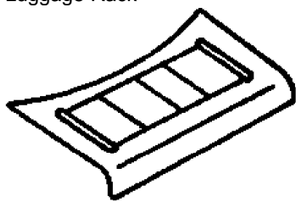	**SXJ-200** Floor Pans 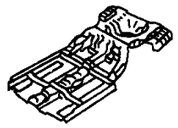
SXJ-300 Plugs 	**SXJ-400** Front Fenders 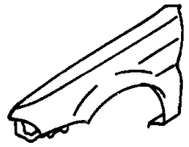	**SXJ-500** Hood & Hood Release 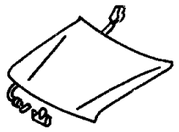	**SXJ-600** Cowl and Dash Panel 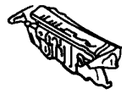
SXJ-700 Glass and Rear View Mirror 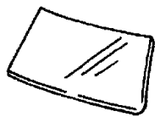	**SXJ-800** Aperture Panel 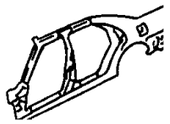	**SXJ-900** Quarter Panel and Pillar 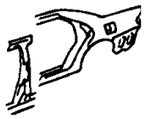	

Group - SXJ Body Sheet Metal Except Doors

Illustration Title — Group-Fig. No.

Floor Pans
Pans, Floor ..... Fig. SXJ - 210
Plates, Underbody Skid ..... Fig. SXJ - 220

Plugs
Plugs ..... Fig. SXJ - 310

Front Fenders
Panels, Front End Inner and Wheelhouse ..... Fig. SXJ - 410
Fenders, Front ..... Fig. SXJ - 420

Hood & Hood Release
Hood, Latch and Hinges ..... Fig. SXJ - 510

Cowl and Dash Panel
Panels, Cowl And Dash, L.H.D. ..... Fig. SXJ - 610
Cowl And Dash Panel, R.H.D. ..... Fig. SXJ - 620

Glass and Rear View Mirror
Glass, Windshield, Backlite and Mirror ..... Fig. SXJ - 710
Windows, Quarter, 2 and 4 Doors ..... Fig. SXJ - 720

Aperture Panel
Panels, Body side, 2 Door ..... Fig. SXJ - 810
Panels, Body Side, 4 Door ..... Fig. SXJ - 820

Quarter Panel and Pillar
Panels, Rear Quarter, 2 Door ..... Fig. SXJ - 910
Fuel Filler Housing & Door ..... Fig. SXJ - 920
Panels, Rear Quarter, 4 Door ..... Fig. SXJ - 930
Appliques, Rear Quarter Panel ..... Fig. SXJ - 940

Roof Panels
Roof Panel ..... Fig. SXJ - 1110

Liftgate Panel
Lift Door, Latch and Hinges ..... Fig. SXJ - 1310

Luggage Rack
Rack, Roof Luggage ..... Fig. SXJ - 1610

Pans, Floor
Figure SXJ-210

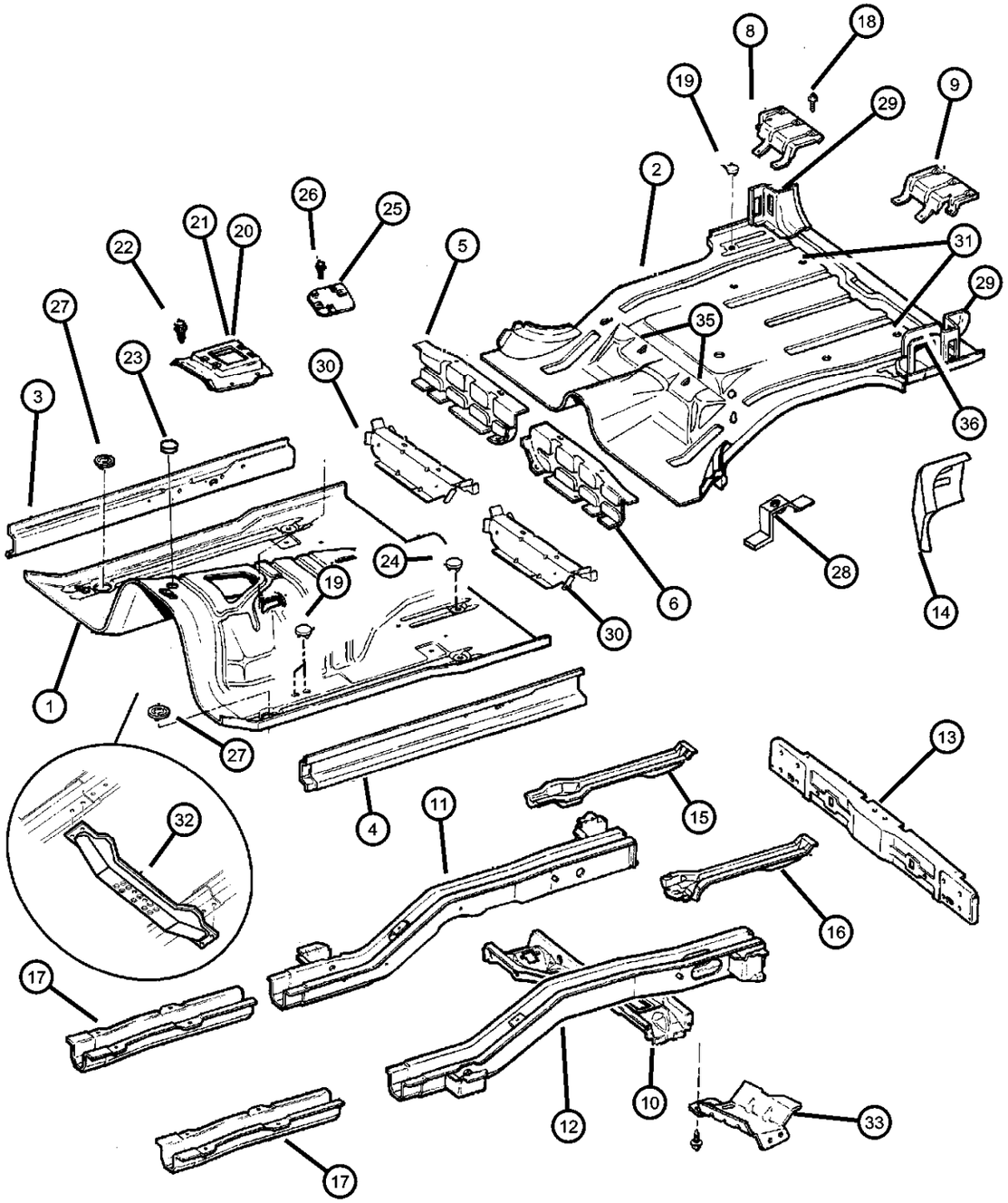

ITEM	PART NUMBER	QTY	LINE	SERIES	BODY	ENGINE	TRANS	TRIM	DESCRIPTION
1	55175512	1							PAN, Front Floor
2	55175177	1							PAN, Floor
3	55175088	1							SILL, Body SideRight
4	55235527	1							SILL, Body SideLeft
5	55235812AA	1							CROSSMEMBER, Floor PanRight
6	55235813AA	1							CROSSMEMBER, Floor PanLeft
-7	J4007073	2							SCREW AND WASHER, .375-16x1.125
8	55002230	1							SUPPORT, Rear FloorRight
9	55002231	1							SUPPORT, Rear FloorLeft
10	55175942	1							CROSSMEMBER, Rear Suspension
11	55235696	1							SILL, RearRight
12	55235697	1							SILL, RearLeft
13	55175178	1							SILL, Rear Cross
14	55175228	1							REINFORCEMENT, Liftgate Opening
15	57000022	1							SUPPORT, Fuel TankRight
16	55002935	1							SUPPORT, Fuel TankLeft
17	55235554	2							SILL, Body Side
18	J4001701	7							SCREW, Hex Self Tapping, .19-16x.50
19	55235716	2							PLUG, Floor
20	52104216	1							COVER, Floor Pan
21									COVER, Gearshift
	53000704	1	J, T						Automatic Transmission
		1	B, U						Automatic Transmission
22	J4001701	7							SCREW, Hex Self Tapping, .19-16x.50
23									PLUG, Floor Pan, 1.50 Diameter
	J4000499	1	B, T						
		1	J, U						
24	55006579	3							PLUG, Body, 38.1mm Diameter
25	55010460	1	B, T						COVER, Floor Pan
26	55010460	1							SCREW, M5x0.8x25.00, (NOT SERVICED)
27	04586052	6							PLUG

CHEROKEE (XJ)

SERIES	LINE	BODY	ENGINE	TRANSMISSION
L = LOWLINE	T = JEEP - 2WD B = JEEP - 2WD (RHD) J = JEEP - 4WD U = JEEP - 4WD (RHD)	72 = SPORT UTILITY 2-DR 74 = SPORT UTILITY 4-DR	ENC = 2.5L 4 Cyl Turbo Diesel Engine EPB = 2.5L 4 Cylinder Engine EPE = Engine - 2.5L Power Tech I-4 Cyl. ERH = 4.0L Power Tech I-6 Engine	DDQ = 5-Speed Manual Transmission DGS = 4-Speed Automatic AW4 Transmission DGO = ALL AUTOMATIC TRANSMISSIONS DBB = ALL MANUAL TRANSMISSIONS

AR = use ase required - = Non illustrrated part

Pans, Floor
Figure SXJ-210

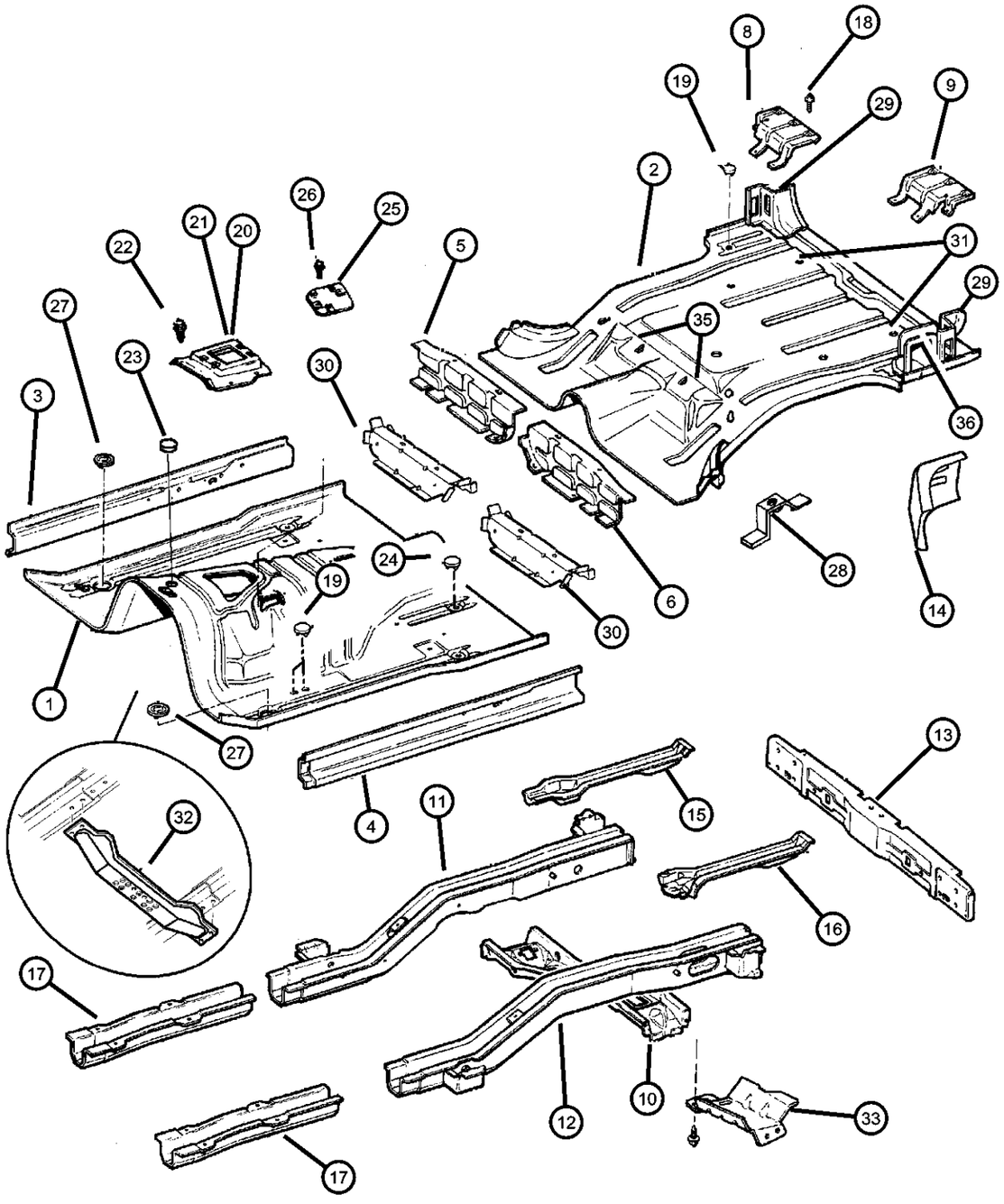

ITEM	PART NUMBER	QTY	LINE	SERIES	BODY	ENGINE	TRANS	TRIM	DESCRIPTION
28	55001903	1							BRACKET, Jack
29									BRACE, Liftgate Opening
	55345172AB	1							Right
	55345173AB	1							Left
30									REINFORCEMENT, Front Seat
	55174756	1							Right
	55174759	1							Left
31	04780194	6							PLUG
32									CROSSMEMBER, Transmission
	52002328	1							4.0L, Automatic
	52003929	1							4.0L, Manual 5 Speed
	52058643	1							2.5l, All Manual
	52058682	1							Turbo, Diesel
33	55003285AB	1							SHIELD, Heat
-34	55003285AB	1							REINFORCEMENT, Rear Floor Pan, (NOT REQUIRED)
35									REINFORCEMENT, Seat Belt Anchor
	55235028	1							Right
	55235029	1							Left
36									EXTENSION, Rear Floor Pan
	55175960	1			74				Right
		1			72				Right
	55175961	1			74				Left
		1			72				Left

CHEROKEE (XJ)

SERIES	LINE	BODY	ENGINE	TRANSMISSION
L = LOWLINE	T = JEEP - 2WD B = JEEP - 2WD (RHD) J = JEEP - 4WD U = JEEP - 4WD (RHD)	72 = SPORT UTILITY 2-DR 74 = SPORT UTILITY 4-DR	ENC = 2.5L 4 Cyl Turbo Diesel Engine EPB = 2.5L 4 Cylinder Engine EPE = Engine - 2.5L Power Tech I-4 Cyl. ERH = 4.0L Power Tech I-6 Engine	DDQ = 5-Speed Manual Transmission DGS = 4-Speed Automatic AW4 Transmission DGO = ALL AUTOMATIC TRANSMISSIONS DBB = ALL MANUAL TRANSMISSIONS

Plates, Underbody Skid
Figure SXJ-220

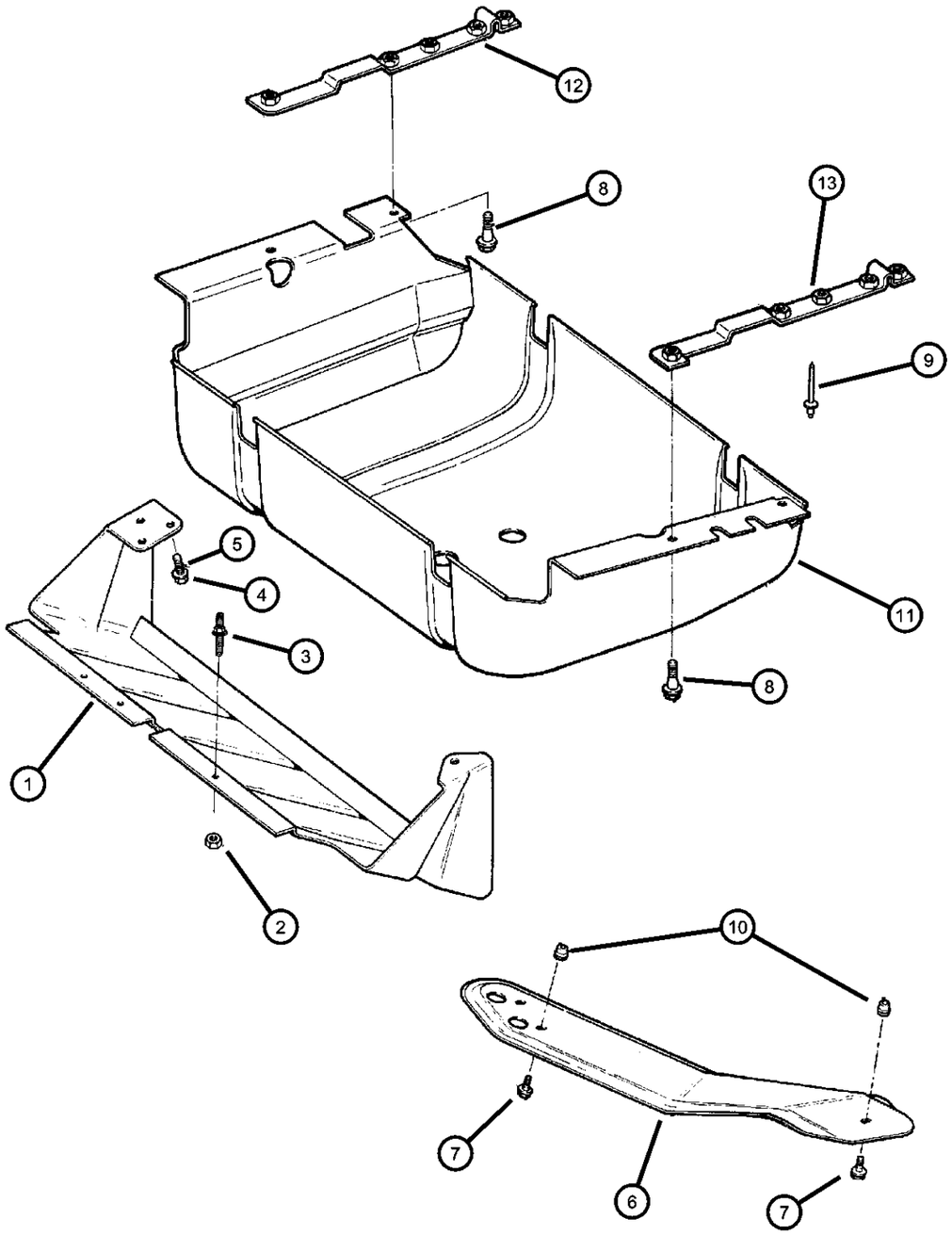

ITEM	PART NUMBER	QTY	LINE	SERIES	BODY	ENGINE	TRANS	TRIM	DESCRIPTION
1	52018009	1							SKID PLATE, Front
2	J4200046	3							NUT AND WASHER, Hex Flange, M8x1.25
3	34202209	3							STUD, Collared, M8x1.25x44.00
4	06502467	2							SCREW AND WASHER, Hex Head, M10x1.5x30, 4.0L
5	34202219	4							BOLT AND WASHER, Hex Head, 2.5L
6	82200616	1							PLATE, Transfer Case Skid
7	11502850	4							BOLT, Hex Flange Head, M8x1.25x20
8	34201964	4							BOLT, Hex Flange Head, M12x1.75x40
9	34201353	4							RIVET, M6.3x14.02
10	34201575	2	J, U						NUT, Insert, M8 x 1.25 x 18.29
11	52100015	1							PLATE, Skid
12	52001174	1							REINFORCEMENT, SillRight
13	52001175	1							REINFORCEMENT, SillLeft

CHEROKEE (XJ)

SERIES	LINE	BODY	ENGINE	TRANSMISSION
L = LOWLINE	T = JEEP - 2WD B = JEEP - 2WD (RHD) J = JEEP - 4WD U = JEEP - 4WD (RHD)	72 = SPORT UTILITY 2-DR 74 = SPORT UTILITY 4-DR	ENC = 2.5L 4 Cyl Turbo Diesel Engine EPB = 2.5L 4 Cylinder Engine EPE = Engine - 2.5L Power Tech I-4 Cyl. ERH = 4.0L Power Tech I-6 Engine	DDQ = 5-Speed Manual Transmission DGS = 4-Speed Automatic AW4 Transmission DGO = ALL AUTOMATIC TRANSMISSIONS DBB = ALL MANUAL TRANSMISSIONS

Plugs
Figure SXJ-310

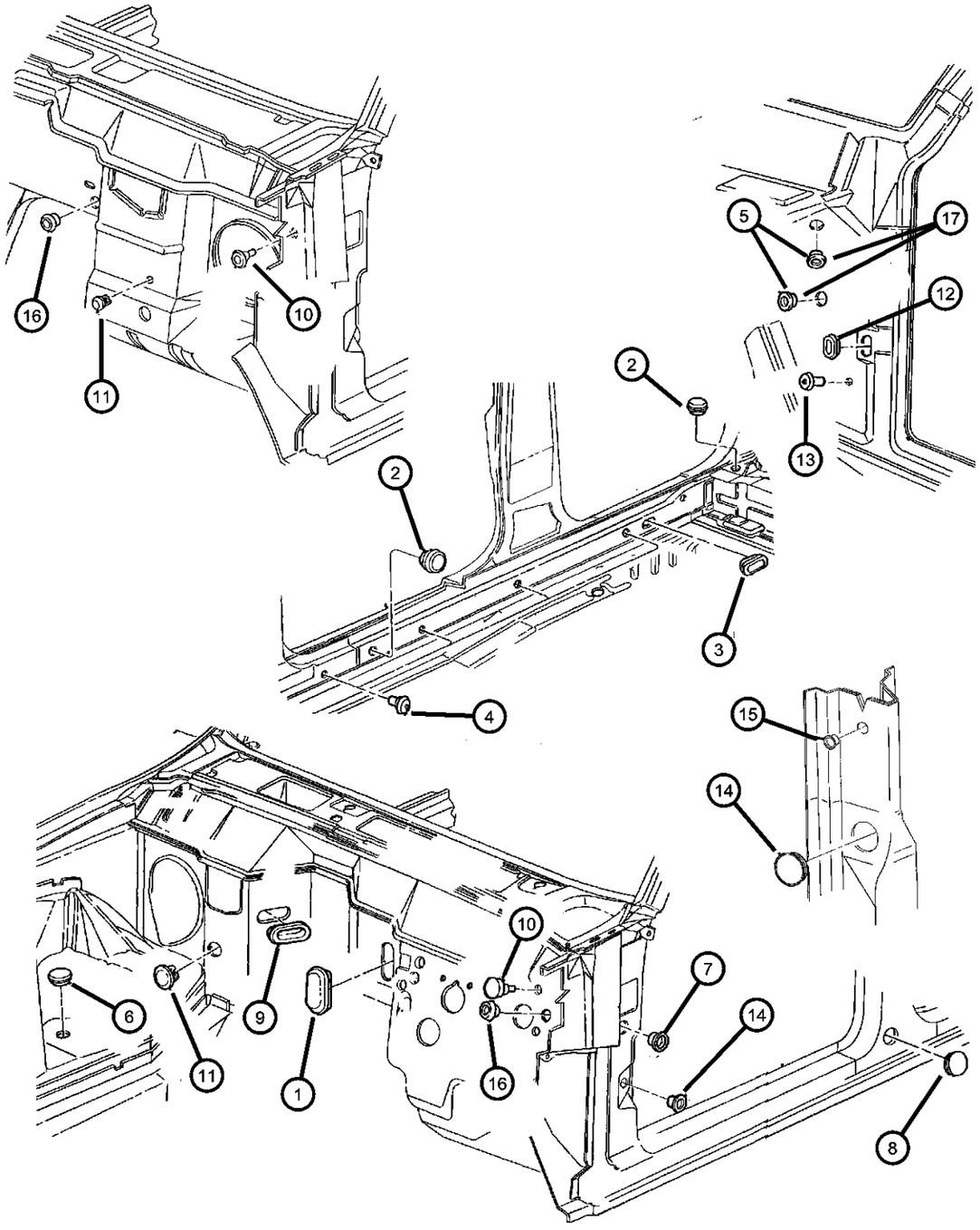

ITEM	PART NUMBER	QTY	LINE	SERIES	BODY	ENGINE	TRANS	TRIM	DESCRIPTION
1	34202215	1	B, J, U						PLUG, Dash Panel
2	34201532	4							PLUG, Liftgate Wiring Hole
3	34201613	2							PLUG, Floor Pan, .748 x 1.0
4	34201973	4			72				PLUG, Sill, Button
5	J4004649	2							PLUG, Body, 1.25 Diameter Plastic
6	J4005015	2							PLUG, Body, .54 Diameter Plastic
7	J4000377	2							PLUG, Floor Pan, 1.00 Diameter
8	J4000377	2							PLUG, Floor Pan, 1.00 Diameter
9	06502246	1							PLUG, Body, 4.0mm X 76.4mm
10	06502246	1							PLUG, (NOT SERVICED)
11	55009554	1							PLUG, Sealing
12	55005400	2							PLUG, Body, 25.4mm x 39mm
13	34201973	4			72				PLUG, Sill, Button
14	55002367	2							PLUG, Door Wiring Conduit
15	34201614	2			74				PLUG, Door Hinge, Button
16	06034362	1							PLUG, Body, 31.9mm Diameter
17	55235717	2							PLUG, Body
-18	04586055	2							PLUG, Floor Pan, 30x50mm

CHEROKEE (XJ)

SERIES	LINE	BODY	ENGINE	TRANSMISSION
L = LOWLINE	T = JEEP - 2WD B = JEEP - 2WD (RHD) J = JEEP - 4WD U = JEEP - 4WD (RHD)	72 = SPORT UTILITY 2-DR 74 = SPORT UTILITY 4-DR	ENC = 2.5L 4 Cyl Turbo Diesel Engine EPB = 2.5L 4 Cylinder Engine EPE = Engine - 2.5L Power Tech I-4 Cyl. ERH = 4.0L Power Tech I-6 Engine	DDQ = 5-Speed Manual Transmission DGS = 4-Speed Automatic AW4 Transmission DGO = ALL AUTOMATIC TRANSMISSIONS DBB = ALL MANUAL TRANSMISSIONS

Panels, Front End Inner and Wheelhouse
Figure SXJ-410

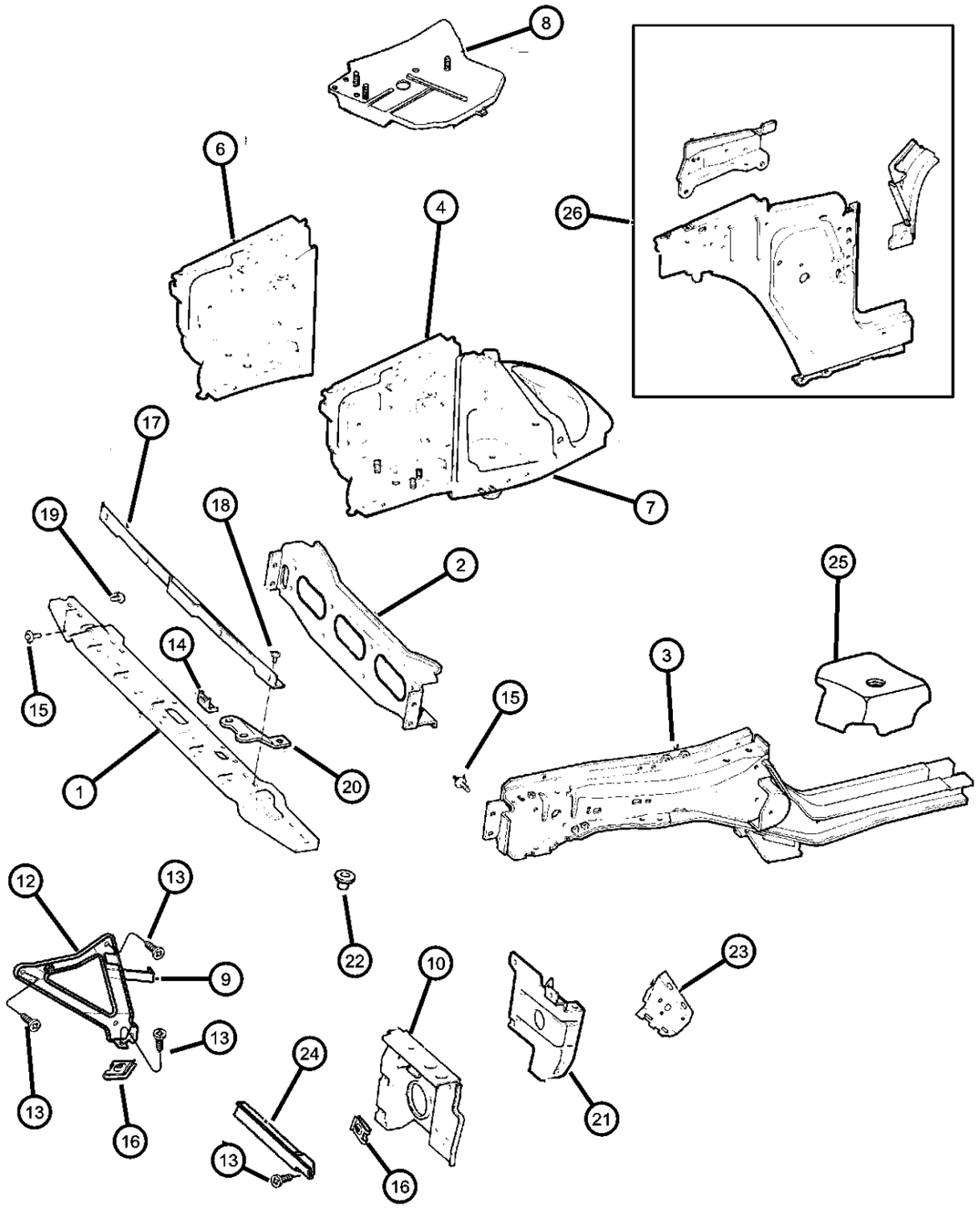

ITEM	PART NUMBER	QTY	LINE	SERIES	BODY	ENGINE	TRANS	TRIM	DESCRIPTION
EP0= 2.5, 4 Cylinder Gas EN0= 4 Cylinder Turbo Diesel ER0= 4.0, 6 Cylinder Gas									
1									CROSSMEMBER, Radiator
	55174973	1							Diesel
	55345545	1	J, T						Gas Only
2	55174978	1							CROSSMEMBER, Front Suspension
3									PANEL, Sill
	04798084	1	J, T						Right
	04798085	1	J, T						Left
	04897136AA	1	B, U						Right
	04897137AA	1	B, U						Left
4									WHEELHOUSE, Front Inner
	55175636	1	B, U						Right
	55175637	1	B, U						Left
	55175640	1	J, T						Right
	55175641	1	J, T						Left
-5	09428962	3	B, U						SCREW, Internal Weld Stud, .250x20x.625
6									PANEL, Front Wheelhouse
	55235624	1							Right
	55235625	1							Left
7									SUPPORT, Shock Absorber
	55174992	1							Right
	55174993	1							Left
	55175003	1							Includes 55174993 & 6503267 Screw, Left
8									REINFORCEMENT, Battery Tray
	55015210	1							
	55235293	1							Diesel, Left Side
9	55019221	2							REINFORCEMENT, Sill
10									BAFFLE, Radiator
	55235220	1							Right
	55235221	1							Left

CHEROKEE (XJ)

SERIES	LINE	BODY	ENGINE	TRANSMISSION
L = LOWLINE	T = JEEP - 2WD B = JEEP - 2WD (RHD) J = JEEP - 4WD U = JEEP - 4WD (RHD)	72 = SPORT UTILITY 2-DR 74 = SPORT UTILITY 4-DR	ENC = 2.5L 4 Cyl Turbo Diesel Engine EPB = 2.5L 4 Cylinder Engine EPE = Engine - 2.5L Power Tech I-4 Cyl. ERH = 4.0L Power Tech I-6 Engine	DDQ = 5-Speed Manual Transmission DGS = 4-Speed Automatic AW4 Transmission DGO = ALL AUTOMATIC TRANSMISSIONS DBB = ALL MANUAL TRANSMISSIONS

Panels, Front End Inner and Wheelhouse
Figure SXJ-410

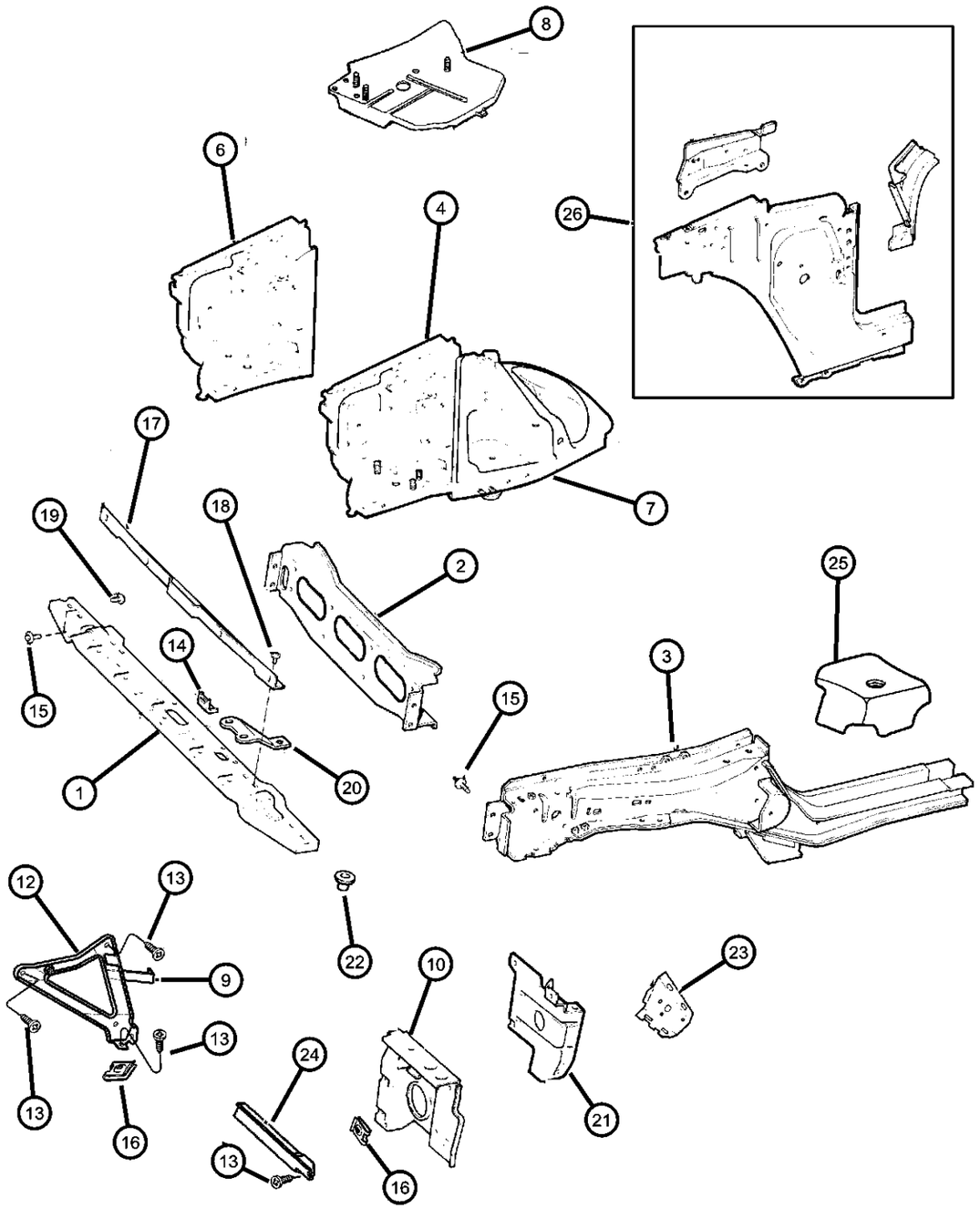

ITEM	PART NUMBER	QTY	LINE	SERIES	BODY	ENGINE	TRANS	TRIM	DESCRIPTION
-11	06504147	2							SCREW AND WASHER, PAN HEAD, M6X1.00X16.00
12									REINFORCEMENT, Sill
	55013176	1							Right
	55013177	1							Left
13	34202575	2							SCREW AND WASHER, Hex Head
14	55009473	1							BRACKET, Grille Opening Panel
15	34201808	2							SCREW AND CONED WASHER, Hex Head, M6x1.00x16.00
16	06504118	3							U-NUT, M6 x 1.00, M6x1.00
17	55010074	1							BRACKET, Grille
18	06504352	4							SCREW
19	34202399	2							SCREW AND WASHER, Round Head, M6x1x16
20	55175247	1							BRACE, Radiator
21									SUPPORT, Radiator
	55009188	1	J, T						4 Cylinder or Diesel Engine, Right
	55345449	1	J, T						4 Cylinder or Diesel Engine, Left
22	34201348	2							NUT, Well
23									REINFORCEMENT, Sill
	55006948	1							Right
	55006949	1							Left
24	55235222	1							REINFORCEMENT, Radiator BaffleRight
25	55346023	1							REINFORCEMENT, Spring and ShockLeft
26									REINFORCEMENT, Pillar And Cowl
	55175194	1							Right
	55175195	1							Left
-27	55175195	1							PLUG, Body, .875 Diameter, (NOT REQUIRED)

CHEROKEE (XJ)

SERIES	LINE	BODY	ENGINE	TRANSMISSION
L = LOWLINE	T = JEEP - 2WD B = JEEP - 2WD (RHD) J = JEEP - 4WD U = JEEP - 4WD (RHD)	72 = SPORT UTILITY 2-DR 74 = SPORT UTILITY 4-DR	ENC = 2.5L 4 Cyl Turbo Diesel Engine EPB = 2.5L 4 Cylinder Engine EPE = Engine - 2.5L Power Tech I-4 Cyl. ERH = 4.0L Power Tech I-6 Engine	DDQ = 5-Speed Manual Transmission DGS = 4-Speed Automatic AW4 Transmission DGO = ALL AUTOMATIC TRANSMISSIONS DBB = ALL MANUAL TRANSMISSIONS

AR = use ase required - = Non illustrrated part

Fenders, Front
Figure SXJ-420

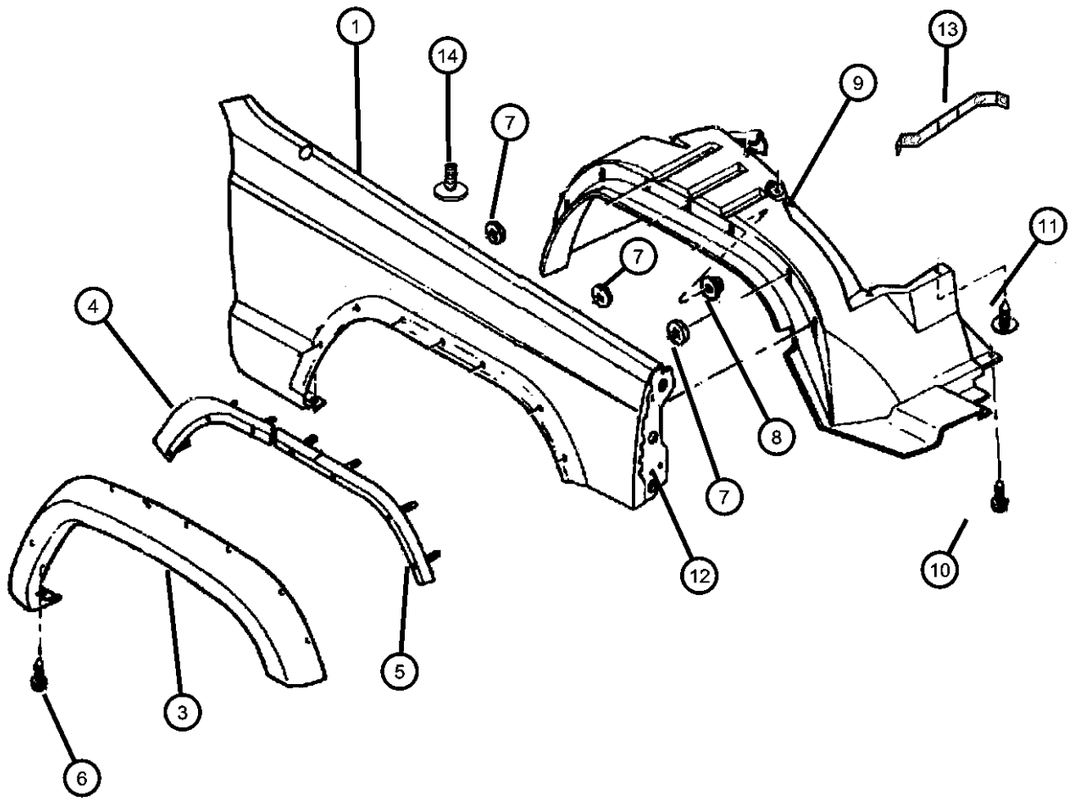

ITEM	PART NUMBER	QTY	LINE	SERIES	BODY	ENGINE	TRANS	TRIM	DESCRIPTION
ARU= SE Decor ARW= Sport Decor ARX= Country Decor ART= Classic Decore									
1									FENDER, Front
	55175396	1							Export, Right
	55175397	1							Export, Left
	55175508	1							Right
	55175509	1							Left
-2	11503745	2							NUT, Hex, M6x1
3									APPLIQUE, Fender Wheel Opening
	5FW70DX8AA	1							Black, With Country or Classic, (ARX), Right
	5FW70PCJAA	1							Dark Montego Blue, Right
	5FW70PR4AA	1							Red, Right
	5FW70RJ-NAA	1							Moss Green, Right
	5FW70SW1AA	1							White, Right
	5FW70TQ7AA	1							Gunmetal Pearl, Right
	5FW71DX8AA	1							Black, With Country or Classic, (ARX), Left
	5FW71PCJAA	1							Dark Montego Blue, Left
	5FW71PR4AA	1							Red, Left
	5FW71RJ-NAA	1							Moss Green, Left
	5FW71SW1AA	1							White, Left
	5FW71TQ7AA	1							Gunmetal Pearl, Left
	5FW72DX9AA	1							Black, With SE or Sport, (ARU,ARW), Right
	5FW73DX9AA	1							Black, With SE or Sport, (ARU,ARW), Left
4									RETAINER, Applique, Rear
	55155674AA	1							Right
	55155675AA	1							Left
5									RETAINER, Applique, Front
	55155676AB	1							Right
	55155677AA	1							Left

CHEROKEE (XJ)

SERIES	LINE	BODY	ENGINE	TRANSMISSION
L = LOWLINE	T = JEEP - 2WD B = JEEP - 2WD (RHD) J = JEEP - 4WD U = JEEP - 4WD (RHD)	72 = SPORT UTILITY 2-DR 74 = SPORT UTILITY 4-DR	ENC = 2.5L 4 Cyl Turbo Diesel Engine EPB = 2.5L 4 Cylinder Engine EPE = Engine - 2.5L Power Tech I-4 Cyl. ERH = 4.0L Power Tech I-6 Engine	DDQ = 5-Speed Manual Transmission DGS = 4-Speed Automatic AW4 Transmission DGO = ALL AUTOMATIC TRANSMISSIONS DBB = ALL MANUAL TRANSMISSIONS

Fenders, Front
Figure SXJ-420

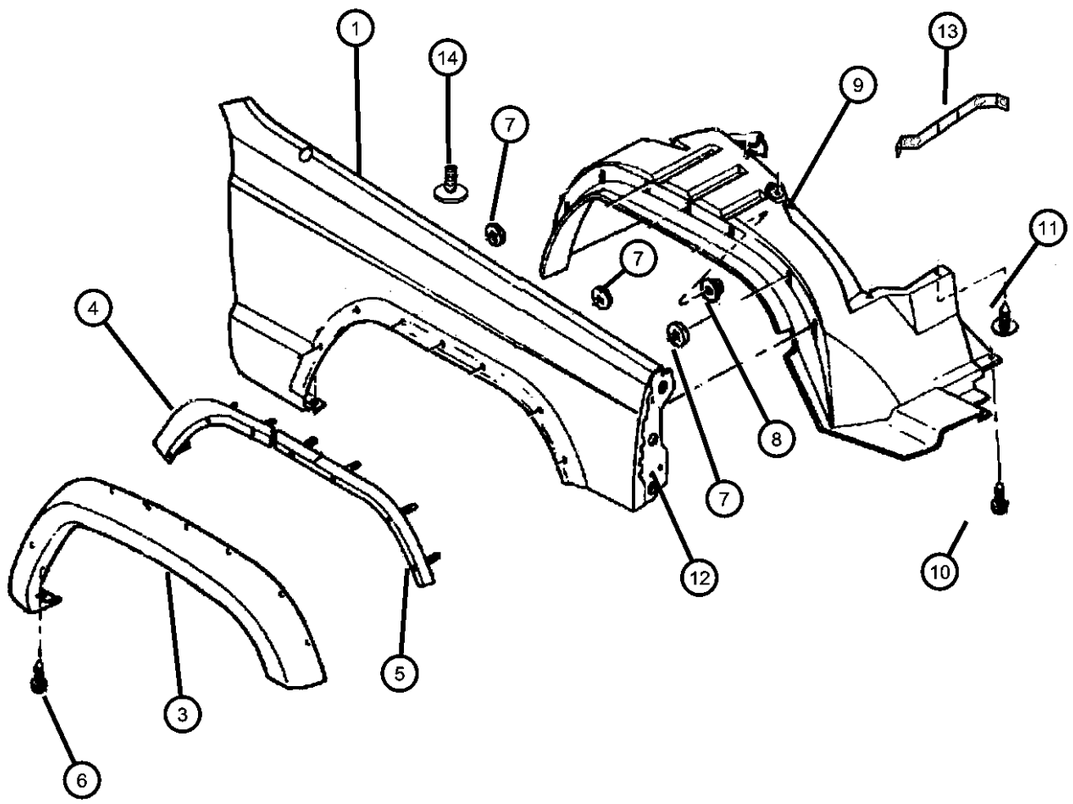

ITEM	PART NUMBER	QTY	LINE	SERIES	BODY	ENGINE	TRANS	TRIM	DESCRIPTION
6	34202358	2							SCREW, Pan Head, M4.8x1.59x13.00
7	06505049AA	6							NUT, M5
8	J4200408	14							NUT AND WASHER, Hex Nut-Coned Washer, M5 x 0.80
9									LINER, Front Fender
	55175896AB	1							Right
	55175897AB	1							Left
10	34202575	2							SCREW AND WASHER, Hex Head
11	06030441	14							PIN, Retainer
12									BRACKET, Fender
	55175586	1							Extension To Baffle, Right
	55175587	1							Extension To Baffle, Left
13	55003652	2							BRACKET, Fender, Wheelhouse To Support Spring Shock
14	J3689548	2							BUMPER, Hood

CHEROKEE (XJ)

SERIES	LINE	BODY	ENGINE	TRANSMISSION
L = LOWLINE	T = JEEP - 2WD B = JEEP - 2WD (RHD) J = JEEP - 4WD U = JEEP - 4WD (RHD)	72 = SPORT UTILITY 2-DR 74 = SPORT UTILITY 4-DR	ENC = 2.5L 4 Cyl Turbo Diesel Engine EPB = 2.5L 4 Cylinder Engine EPE = Engine - 2.5L Power Tech I-4 Cyl. ERH = 4.0L Power Tech I-6 Engine	DDQ = 5-Speed Manual Transmission DGS = 4-Speed Automatic AW4 Transmission DGO = ALL AUTOMATIC TRANSMISSIONS DBB = ALL MANUAL TRANSMISSIONS

Hood, Latch and Hinges
Figure SXJ-510

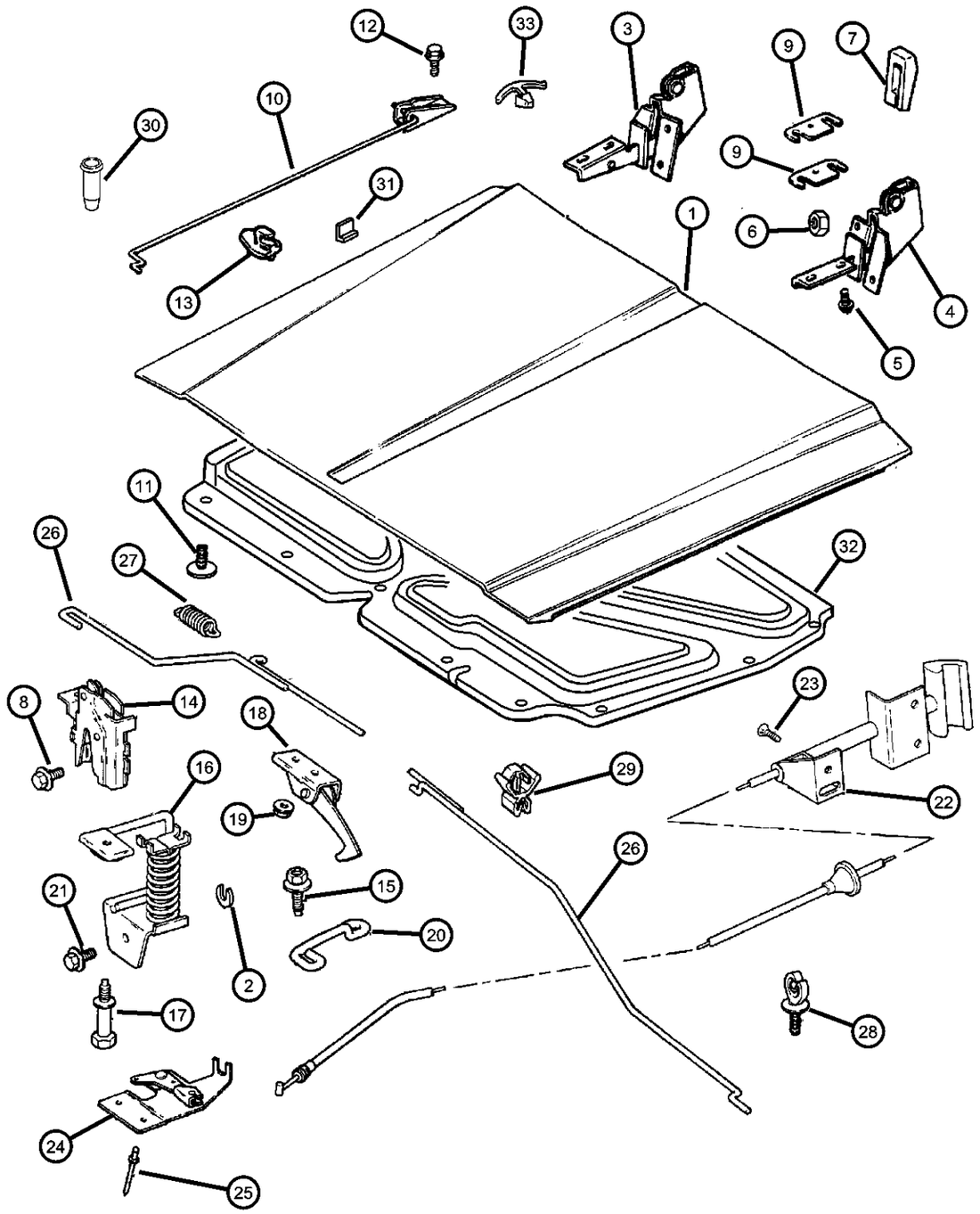

ITEM	PART NUMBER	QTY	LINE	SERIES	BODY	ENGINE	TRANS	TRIM	DESCRIPTION
1	55235439	1							HOOD
2	34202581	AR							SPACER, Hood Latch
3	55235724AB	1							HINGE, HoodRight
4	55235725AB	1							HINGE, HoodLeft
5	55235725AB	1							SCREW AND WASHER, Hex Head, M8-1.25x30, (NOT REQUIRED)
6	06500284	6							NUT, Hex, M6x1.00
7	55001982	2							SEAL, Hood Hinge
8	34202005	2							SCREW, Pan Head Torx, M6x1x14
9	J0680435	8							SHIM, Hood Hinge
10	55017480	1							ROD, Hood Prop
11									BUMPER, Hood
	04103165	1							Crossmember to Hood Adjust
	J3689548	2							Hood Front to Hood Adjust
12	34201807	2							BOLT, Hex Flange Head, M6x1.00x16
13	55075480	1							CLIP, Prop Rod
14	55235523	2							LATCH, Hood
15	06504641	2							SCREW AND WASHER, Button Head Torx
16	55075884	2							STRIKER, Hood Latch
17	06503963	2							BOLT AND CONED WASHER, Hex Head, M8x1.25x58.28
18	55009998	1							HOOK, Hood Safety Catch
19	34201680	2							NUT, Hex Flange, M6x1
20	55009999	1							STRIKER, Hood Safety Catch
21	06504641	2							SCREW AND WASHER, Button Head Torx
22									CABLE, Hood Release
	55235270	1	B, U						
	55235483	1	J, T						
23									SCREW
	06504997AA	3	J, T						
		2	B, U						
24	55074526	1							BELLCRANK, Hood Release

CHEROKEE (XJ)

SERIES	LINE	BODY	ENGINE	TRANSMISSION
L = LOWLINE	T = JEEP - 2WD B = JEEP - 2WD (RHD) J = JEEP - 4WD U = JEEP - 4WD (RHD)	72 = SPORT UTILITY 2-DR 74 = SPORT UTILITY 4-DR	ENC = 2.5L 4 Cyl Turbo Diesel Engine EPB = 2.5L 4 Cylinder Engine EPE = Engine - 2.5L Power Tech I-4 Cyl. ERH = 4.0L Power Tech I-6 Engine	DDQ = 5-Speed Manual Transmission DGS = 4-Speed Automatic AW4 Transmission DGO = ALL AUTOMATIC TRANSMISSIONS DBB = ALL MANUAL TRANSMISSIONS

AR = use ase required - = Non illustrrated part

Hood, Latch and Hinges
Figure SXJ-510

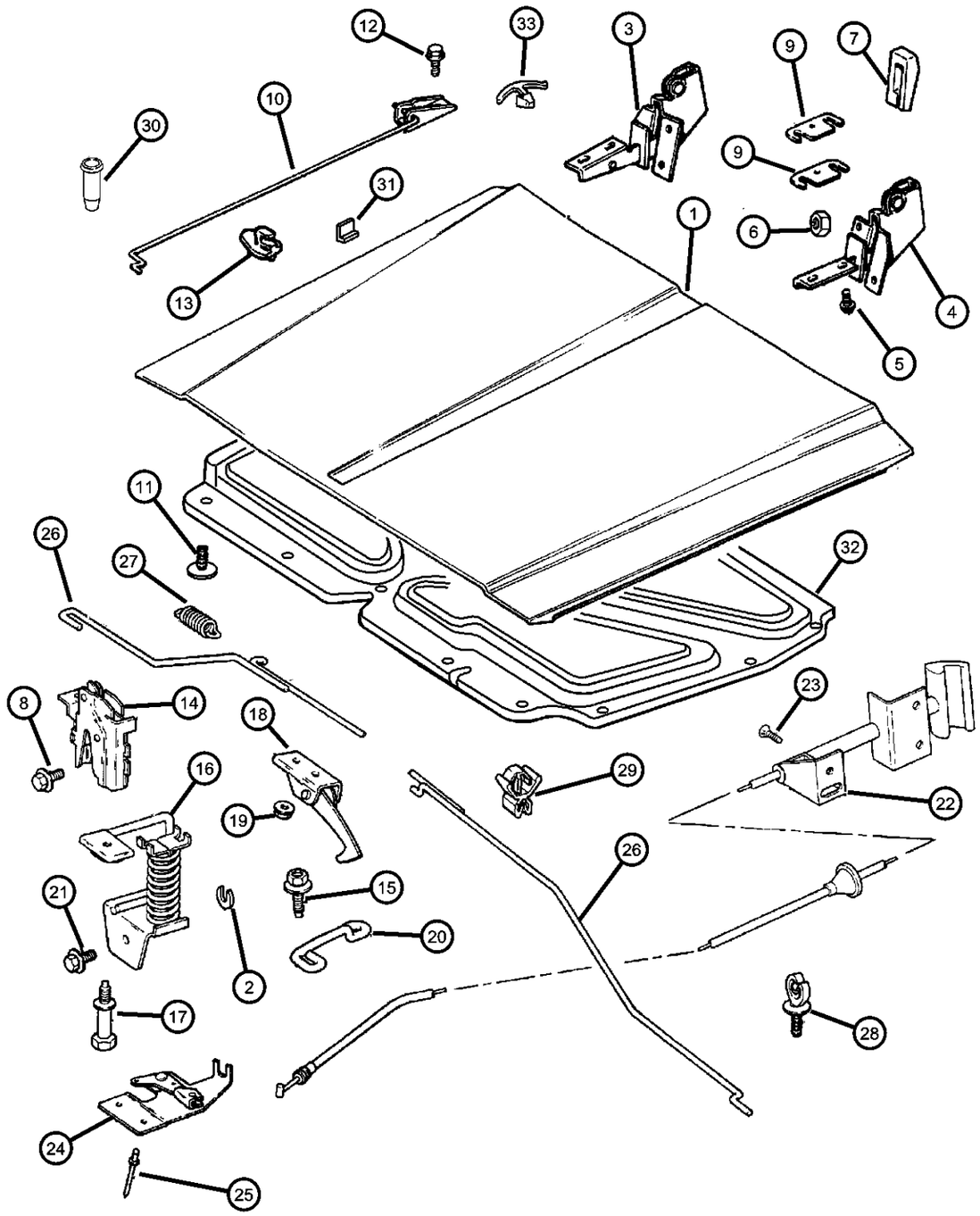

ITEM	PART NUMBER	QTY	LINE	SERIES	BODY	ENGINE	TRANS	TRIM	DESCRIPTION
25	34201208	2							RIVET, M4.8x13.23
26	55075442	1							ROD, Hood Latch
27	55029718	1							SPRING, Hood Latch
28									CLIP, Tube
	32000404	1	B, U						
		2	J, T						
29	34202688	2							CLIP, Latch&Line
30	06504262	2							NUT, Rivet
31	J3689548	2							BUMPER, Hood, Hood Front Fender Side
32	55217068AC	1							INSULATION, Hood
33	06003351	13							RETAINER, Hood Insulation, .415x.690

CHEROKEE (XJ)

SERIES	LINE	BODY	ENGINE	TRANSMISSION
L = LOWLINE	T = JEEP - 2WD B = JEEP - 2WD (RHD) J = JEEP - 4WD U = JEEP - 4WD (RHD)	72 = SPORT UTILITY 2-DR 74 = SPORT UTILITY 4-DR	ENC = 2.5L 4 Cyl Turbo Diesel Engine EPB = 2.5L 4 Cylinder Engine EPE = Engine - 2.5L Power Tech I-4 Cyl. ERH = 4.0L Power Tech I-6 Engine	DDQ = 5-Speed Manual Transmission DGS = 4-Speed Automatic AW4 Transmission DGO = ALL AUTOMATIC TRANSMISSIONS DBB = ALL MANUAL TRANSMISSIONS

Panels, Cowl And Dash, L.H.D.
Figure SXJ-610

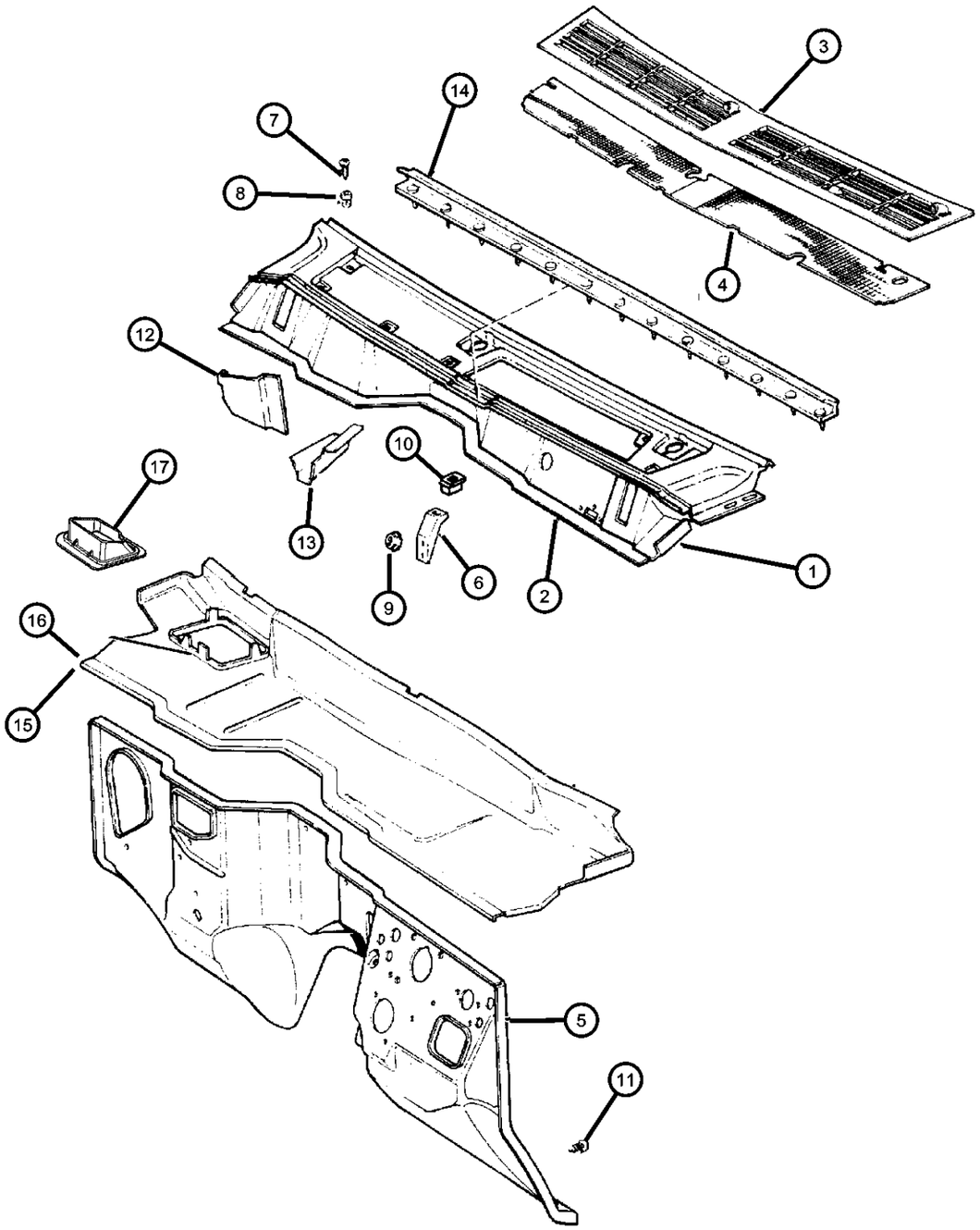

ITEM	PART NUMBER	QTY	LINE	SERIES	BODY	ENGINE	TRANS	TRIM	DESCRIPTION
1	55175386	1	J, T						PANEL, Cowl
2	55175638	1	J, T						EXTENSION, Cowl Top
3	55008832	1	J, T						GRILLE, Cowl Panel
4	55008833	1	J, T						SCREEN, Cowl
5	55175378	1	J, T						PANEL, Dash
6	55235370	1	J, T						BRACKET, Grille To Cowl Extension
7	34201230	7							SCREW, Round Washer Head AB
8	J4005242	5							NUT, Push
9	34201358	2							NUT AND WASHER, Hex Nut-Sealing Washer, M6 x 1.00
10	34201872	1							NUT, Snap In, M4.2 x 1.41
11	06504700	3	J, T						RIVET, Blind Expansion (R-Lok)
12	55006544	1	J, T						SHIELD, Plenum
13	55004918	1	J, T						SHIELD, Cowl
14	55235178	1							SEAL, Hood To Cowl
15	55175964	1	J, T						PANEL, Cowl And Plenum
16	55235387	1	J, T						PANEL, Cowl And Plenum
17	55037128	1	J, T						BAFFLE, Air Inlet

CHEROKEE (XJ)

SERIES	LINE	BODY	ENGINE	TRANSMISSION
L = LOWLINE	T = JEEP - 2WD B = JEEP - 2WD (RHD) J = JEEP - 4WD U = JEEP - 4WD (RHD)	72 = SPORT UTILITY 2-DR 74 = SPORT UTILITY 4-DR	ENC = 2.5L 4 Cyl Turbo Diesel Engine EPB = 2.5L 4 Cylinder Engine EPE = Engine - 2.5L Power Tech I-4 Cyl. ERH = 4.0L Power Tech I-6 Engine	DDQ = 5-Speed Manual Transmission DGS = 4-Speed Automatic AW4 Transmission DGO = ALL AUTOMATIC TRANSMISSIONS DBB = ALL MANUAL TRANSMISSIONS

Cowl And Dash Panel, R.H.D.
Figure SXJ-620

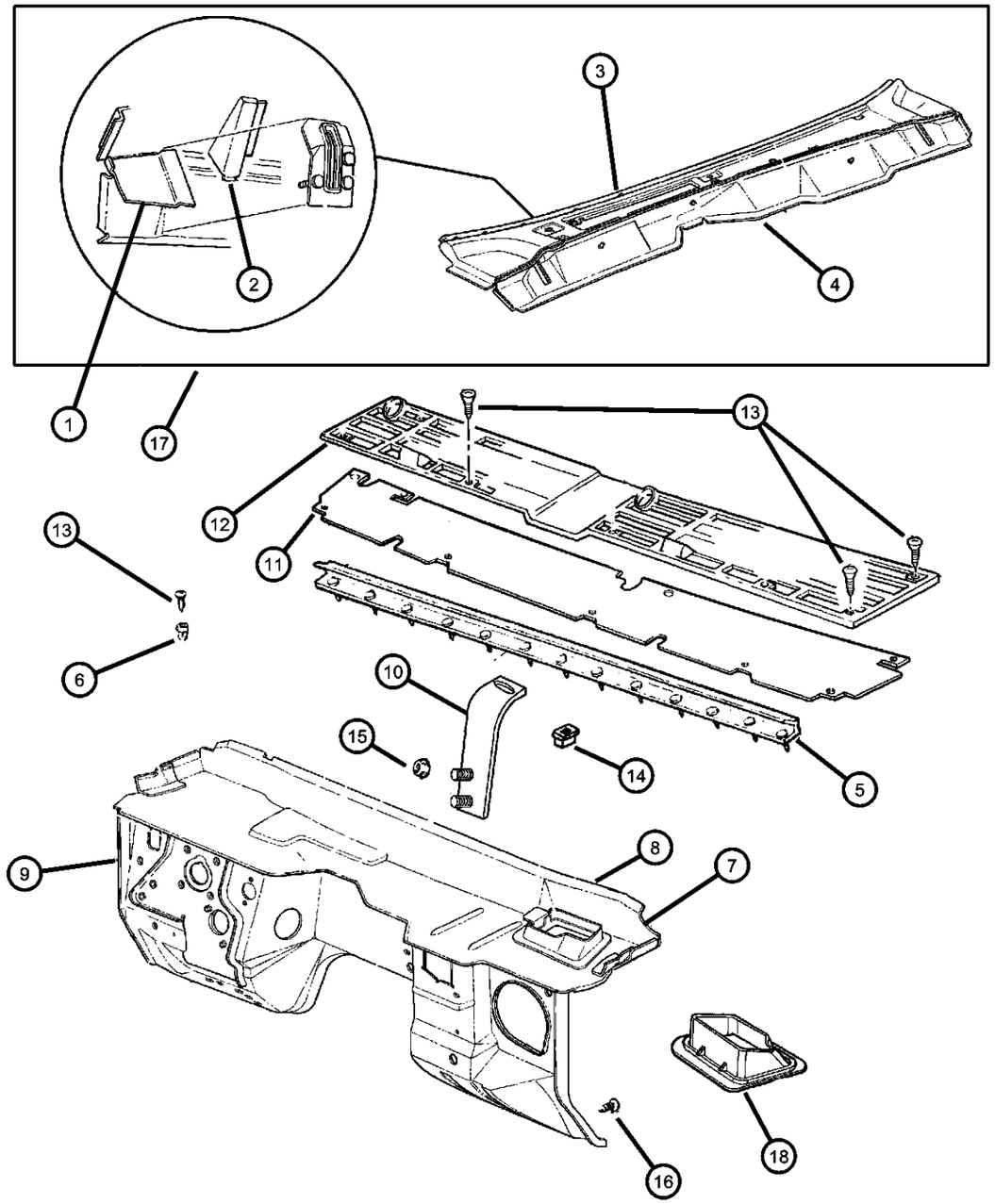

ITEM	PART NUMBER	QTY	LINE	SERIES	BODY	ENGINE	TRANS	TRIM	DESCRIPTION
1	55027542	1	B, U						SHIELD, Plenum
2	55027543	1	B, U						SHIELD, Cowl
3	55175389	1	B, U						PANEL, Cowl Top
4	55175639	1	B, U						EXTENSION, Cowl Top
5	55235178	1							SEAL, Hood To Cowl
6	J4005242	5							NUT, Push
7	55175965	1	B, U						PANEL, Cowl And Plenum, Panel and Cowl Assemble
8	55235388	1	B, U						PANEL, Cowl, Panel Only
9	55175379	1	B, U						PANEL, Dash
10	55235371	1	B, U						BRACKET, Extension to Cowl Top
11	55027697	1	B, U						SCREEN, Cowl
12	55027696	1	B, U						GRILLE, Cowl Panel
13	34201230	7							SCREW, Round Washer Head AB
14	34201872	1							NUT, Snap In, M4.2 x 1.41
15	34201358	2							NUT AND WASHER, Hex Nut-Sealing Washer, M6 x 1.00
16	06504700	3	B, U						RIVET, Blind Expansion (R-Lok)
17	55175387	1	B, U						PANEL, Cowl
18	55037127	1	B, U						DEFLECTOR, Cowl Air Chamber

CHEROKEE (XJ)

SERIES	LINE	BODY	ENGINE	TRANSMISSION
L = LOWLINE	T = JEEP - 2WD B = JEEP - 2WD (RHD) J = JEEP - 4WD U = JEEP - 4WD (RHD)	72 = SPORT UTILITY 2-DR 74 = SPORT UTILITY 4-DR	ENC = 2.5L 4 Cyl Turbo Diesel Engine EPB = 2.5L 4 Cylinder Engine EPE = Engine - 2.5L Power Tech I-4 Cyl. ERH = 4.0L Power Tech I-6 Engine	DDQ = 5-Speed Manual Transmission DGS = 4-Speed Automatic AW4 Transmission DGO = ALL AUTOMATIC TRANSMISSIONS DBB = ALL MANUAL TRANSMISSIONS

AR = use ase required - = Non illustrrated part

Glass, Windshield, Backlite and Mirror
Figure SXJ-710

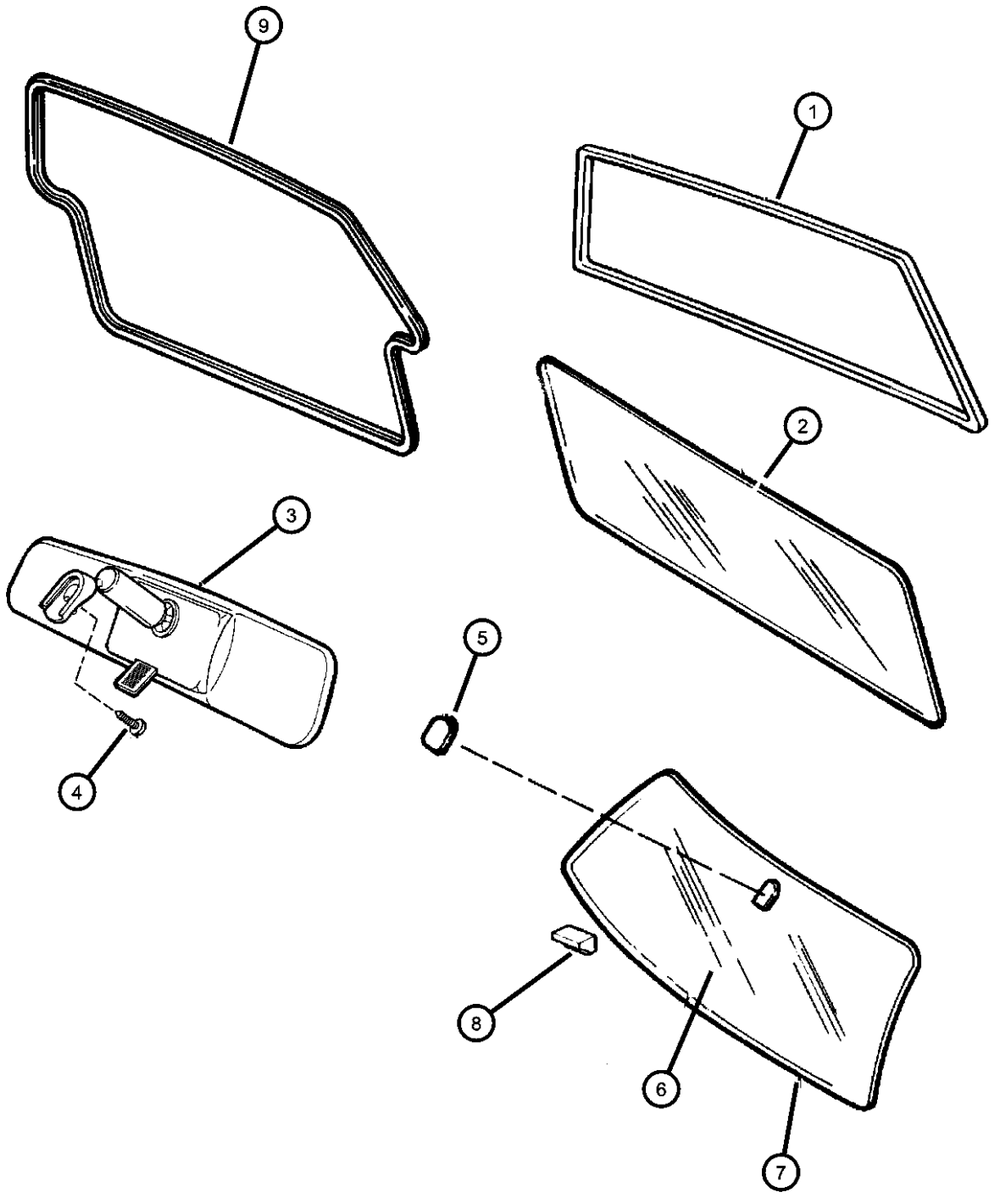

ITEM	PART NUMBER	QTY	LINE	SERIES	BODY	ENGINE	TRANS	TRIM	DESCRIPTION
1	55175366	1							MOLDING, Liftgate
2									BACKLITE
	55174950	1							Tinted
	55174951	1							Tint Heated
	55174952	1							Privacy, Heated
	55235853AA	1							Privacy
3	04520336	1							MIRROR, Inside Rear View
4	06031094	1							SCREW, Pan Head Tapping, .19-16x.375
5	04054098	1							BUTTON, Rear View Mirror
6	55154994	1							WINDSHIELD
7	55235391AB	1							MOLDING, Windshield
8	55235796AA	2							SPACER, Windshield
9	55175354	1							WEATHERSEAL, Tailgate

CHEROKEE (XJ)

SERIES	LINE	BODY	ENGINE	TRANSMISSION
L = LOWLINE	T = JEEP - 2WD B = JEEP - 2WD (RHD) J = JEEP - 4WD U = JEEP - 4WD (RHD)	72 = SPORT UTILITY 2-DR 74 = SPORT UTILITY 4-DR	ENC = 2.5L 4 Cyl Turbo Diesel Engine EPB = 2.5L 4 Cylinder Engine EPE = Engine - 2.5L Power Tech I-4 Cyl. ERH = 4.0L Power Tech I-6 Engine	DDQ = 5-Speed Manual Transmission DGS = 4-Speed Automatic AW4 Transmission DGO = ALL AUTOMATIC TRANSMISSIONS DBB = ALL MANUAL TRANSMISSIONS

Windows, Quarter, 2 and 4 Doors
Figure SXJ-720

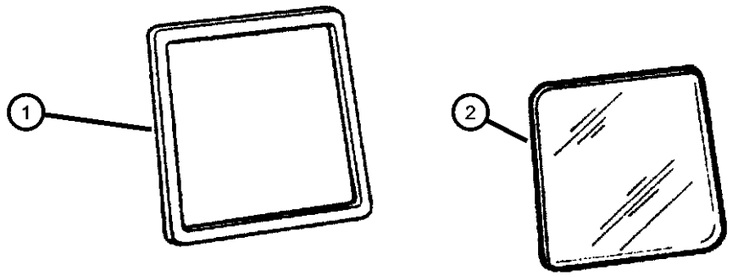

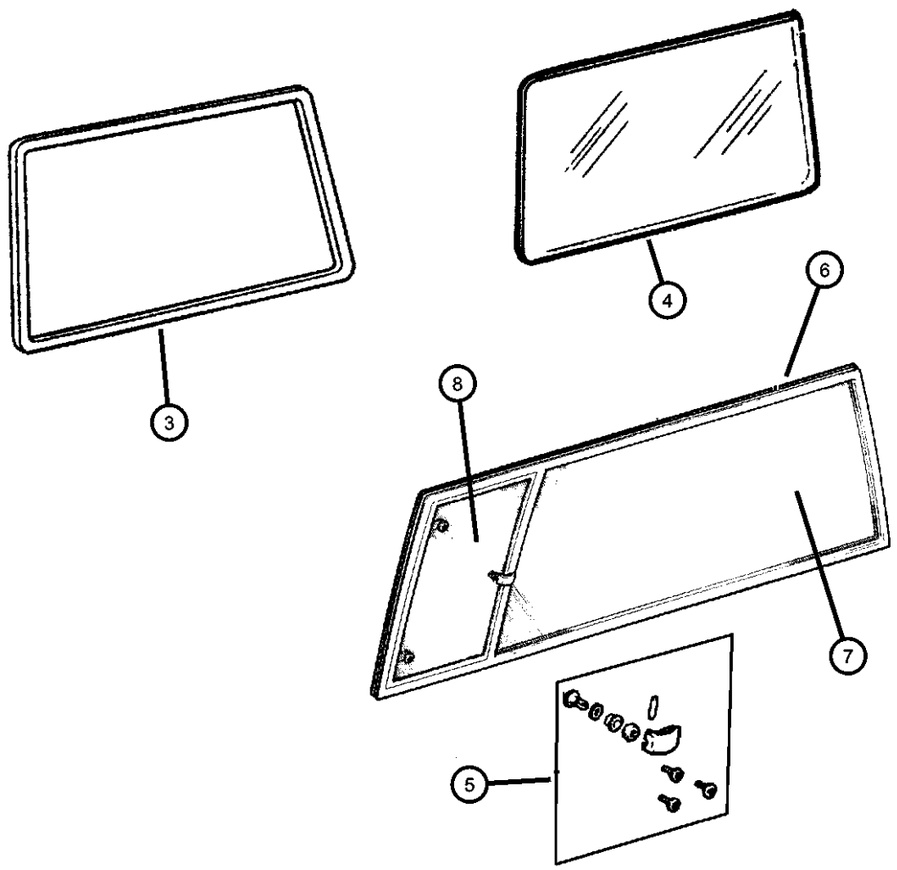

ITEM	PART NUMBER	QTY	LINE	SERIES	BODY	ENGINE	TRANS	TRIM	DESCRIPTION
1									SEAL, Quarter Window
	55007128	1			74				Right
	55007129	1			74				Left
2									GLASS, Quarter Window
	55000700	1			74				Tinted, Right
	55000701	1			74				Tinted, Left
	55174998	1			74				Privacy, Right
	55174999	1			74				Privacy, Left
3									SEAL, Quarter Window
	55235296AB	1			72				Right
	55235297AB	1			72				Left
4									GLASS, Quarter Window
	55000186	1			72				Without Vents, Right
	55000187	1			72				Without Vents, Left
5	04773489	1			72				LATCH, Vent Window
6									GLASS, Quarter Window
	55134642	1			72				Privacy, Right
	55134643	1			72				Privacy, Left
7									GLASS, Quarter Window
	04713872	1			72				Privacy, Right
	04713873	1			72				Privacy, Left
8									GLASS, Quarter Vent Window
	55134644	1			72				Privacy, Right
	55134645	1			72				Privacy, Left
-9	04762241	1			72				HINGE, Glass

CHEROKEE (XJ)

SERIES	LINE	BODY	ENGINE	TRANSMISSION
L = LOWLINE	T = JEEP - 2WD B = JEEP - 2WD (RHD) J = JEEP - 4WD U = JEEP - 4WD (RHD)	72 = SPORT UTILITY 2-DR 74 = SPORT UTILITY 4-DR	ENC = 2.5L 4 Cyl Turbo Diesel Engine EPB = 2.5L 4 Cylinder Engine EPE = Engine - 2.5L Power Tech I-4 Cyl. ERH = 4.0L Power Tech I-6 Engine	DDQ = 5-Speed Manual Transmission DGS = 4-Speed Automatic AW4 Transmission DGO = ALL AUTOMATIC TRANSMISSIONS DBB = ALL MANUAL TRANSMISSIONS

Panels, Body side, 2 Door
Figure SXJ-810

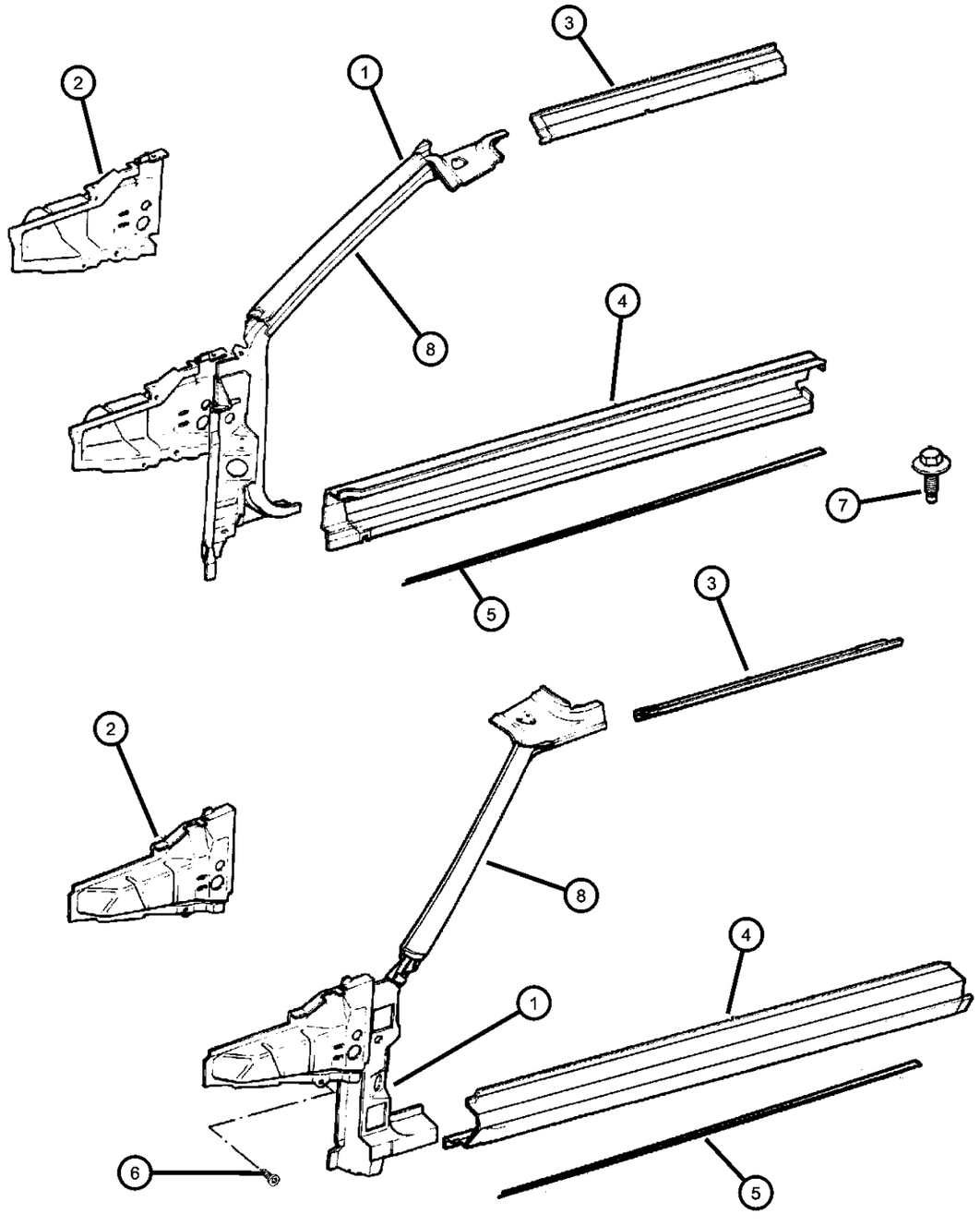

ITEM	PART NUMBER	QTY	LINE	SERIES	BODY	ENGINE	TRANS	TRIM	DESCRIPTION
1									PILLAR, Front
	55235620	1			72				Right
	55235621	1			72				Left
2									PANEL, Cowl Side
	55175506	1			72				Right
	55175507	1			72				Left
3									RAIL, Roof Side
	55345844	1			72				Right
	55345845	1			72				Left
4									PANEL, Rocker Extension
	55235088	1			72				Without Sport or Country Decor Group, Right
	55235089	1			72				Without Sport or Country Decor Group, Left
	55235458	1			72				With Sport or Country Decor Group, Right
	55235459	1			72				With Sport or Country Decor Group, Left
5	55235478	2			72				SEAL, Rocker Panel
6									RIVET, Blind Expansion (R-Lok)
	06504700	3	B, U						
		3	J, T						
7	06101455	2							SCREW AND WASHER, Hex Head, M6x1x20
8									REINFORCEMENT, Front Pillar
	55235640	1			72				Right
	55235641	1			72				Left

CHEROKEE (XJ)

SERIES	LINE	BODY	ENGINE	TRANSMISSION
L = LOWLINE	T = JEEP - 2WD B = JEEP - 2WD (RHD) J = JEEP - 4WD U = JEEP - 4WD (RHD)	72 = SPORT UTILITY 2-DR 74 = SPORT UTILITY 4-DR	ENC = 2.5L 4 Cyl Turbo Diesel Engine EPB = 2.5L 4 Cylinder Engine EPE = Engine - 2.5L Power Tech I-4 Cyl. ERH = 4.0L Power Tech I-6 Engine	DDQ = 5-Speed Manual Transmission DGS = 4-Speed Automatic AW4 Transmission DGO = ALL AUTOMATIC TRANSMISSIONS DBB = ALL MANUAL TRANSMISSIONS

Panels, Body Side, 4 Door
Figure SXJ-820

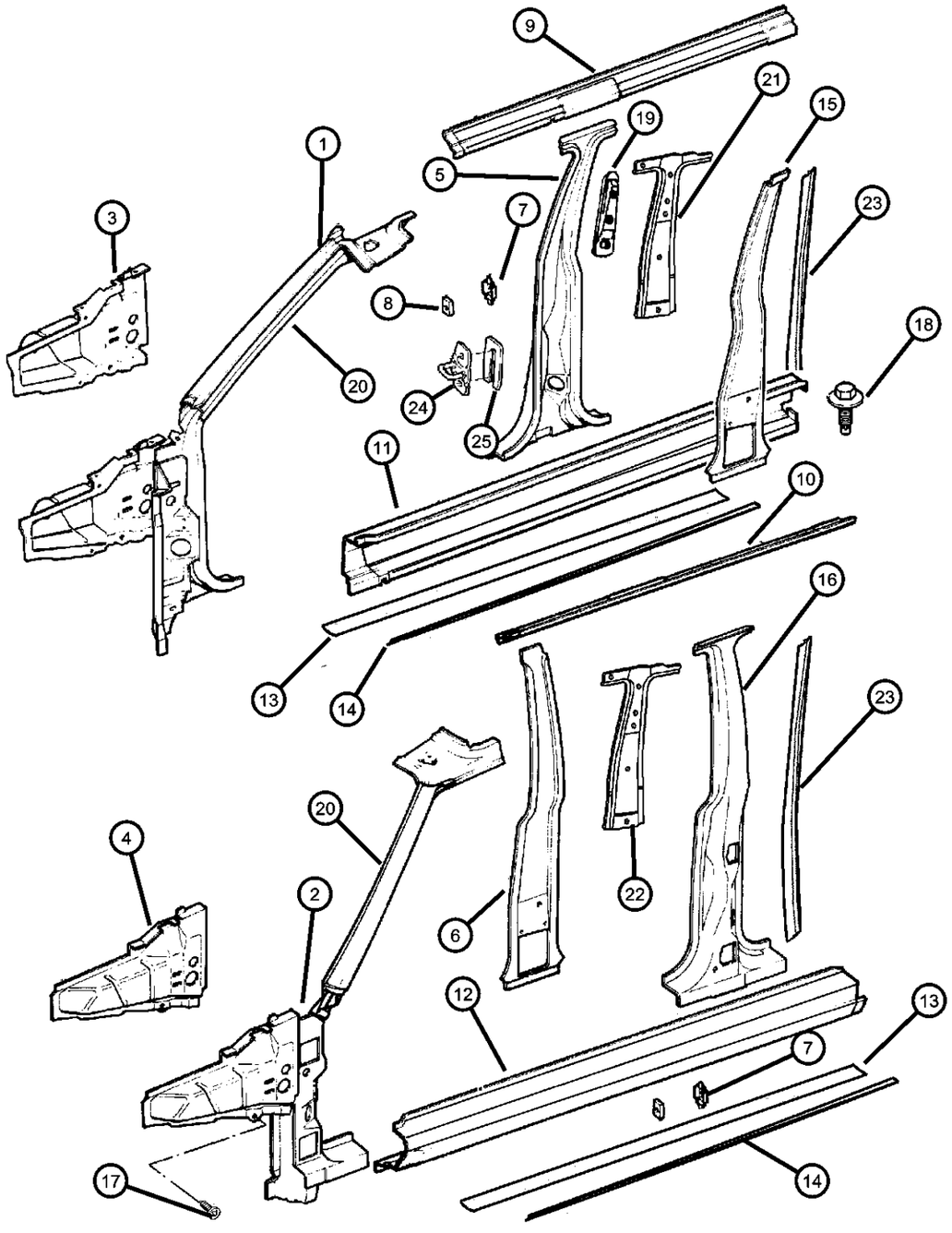

ITEM	PART NUMBER	QTY	LINE	SERIES	BODY	ENGINE	TRANS	TRIM	DESCRIPTION
1	55235620	1			72				PILLAR, FrontRight
2	55235621	1			74				PILLAR, FrontLeft
3	55175506	1			74				PANEL, Cowl SideRight
4	55175507	1			74				PANEL, Cowl SideLeft
5	55235466	1			74				PILLAR, CenterRight
6	55235695	1			74				REINFORCEMENT, Center PillarLeft
7	55256174	1			74				RETAINER, Door Lock Striker
8	04674669	2							PLATE, Liftgate Striker
9	55235328	1			74				RAIL, Roof SideRight
10	55235329	1			74				RAIL, Roof SideLeft
11									PANEL, Rocker Extension
	55235090	1			74				With Sport Decor Group, Right
	55235456	1			74				With SE or Country Decor Group, Right
12									PANEL, Rocker Extension
	55235091	1			74				With Sport Decor Group, Left
	55235457	1			74				With SE or Country Decor Group, Left
13	55235479	2			74				TAPE, Anti Chip
14	55235480	2			74				SEAL, Rocker Panel
15	55235694	1			74				REINFORCEMENT, Center PillarRight
16	55235467	1			74				PILLAR, Center
17									RIVET, Blind Expansion (R-Lok)
	06504700	3	B, U						
		3	J, T						
18	06101455	4							SCREW AND WASHER, Hex Head, M6x1x20
19	55235692	1			74				TAPPING PLATE, Shoulder Belt
20									REINFORCEMENT, Front Pillar
	55235640	1			74				Right
	55235641	1			74				Left
21	55235288	1			74				REINFORCEMENT, Seat BeltRight
22	55235289	1			74				REINFORCEMENT, Seat BeltLeft
23	55235791AA	2			74				WEATHERSTRIP, B Pillar Secondary

CHEROKEE (XJ)

SERIES	LINE	BODY	ENGINE	TRANSMISSION
L = LOWLINE	T = JEEP - 2WD B = JEEP - 2WD (RHD) J = JEEP - 4WD U = JEEP - 4WD (RHD)	72 = SPORT UTILITY 2-DR 74 = SPORT UTILITY 4-DR	ENC = 2.5L 4 Cyl Turbo Diesel Engine EPB = 2.5L 4 Cylinder Engine EPE = Engine - 2.5L Power Tech I-4 Cyl. ERH = 4.0L Power Tech I-6 Engine	DDQ = 5-Speed Manual Transmission DGS = 4-Speed Automatic AW4 Transmission DGO = ALL AUTOMATIC TRANSMISSIONS DBB = ALL MANUAL TRANSMISSIONS

AR = use ase required - = Non illustrrated part

Panels, Body Side, 4 Door
Figure SXJ-820

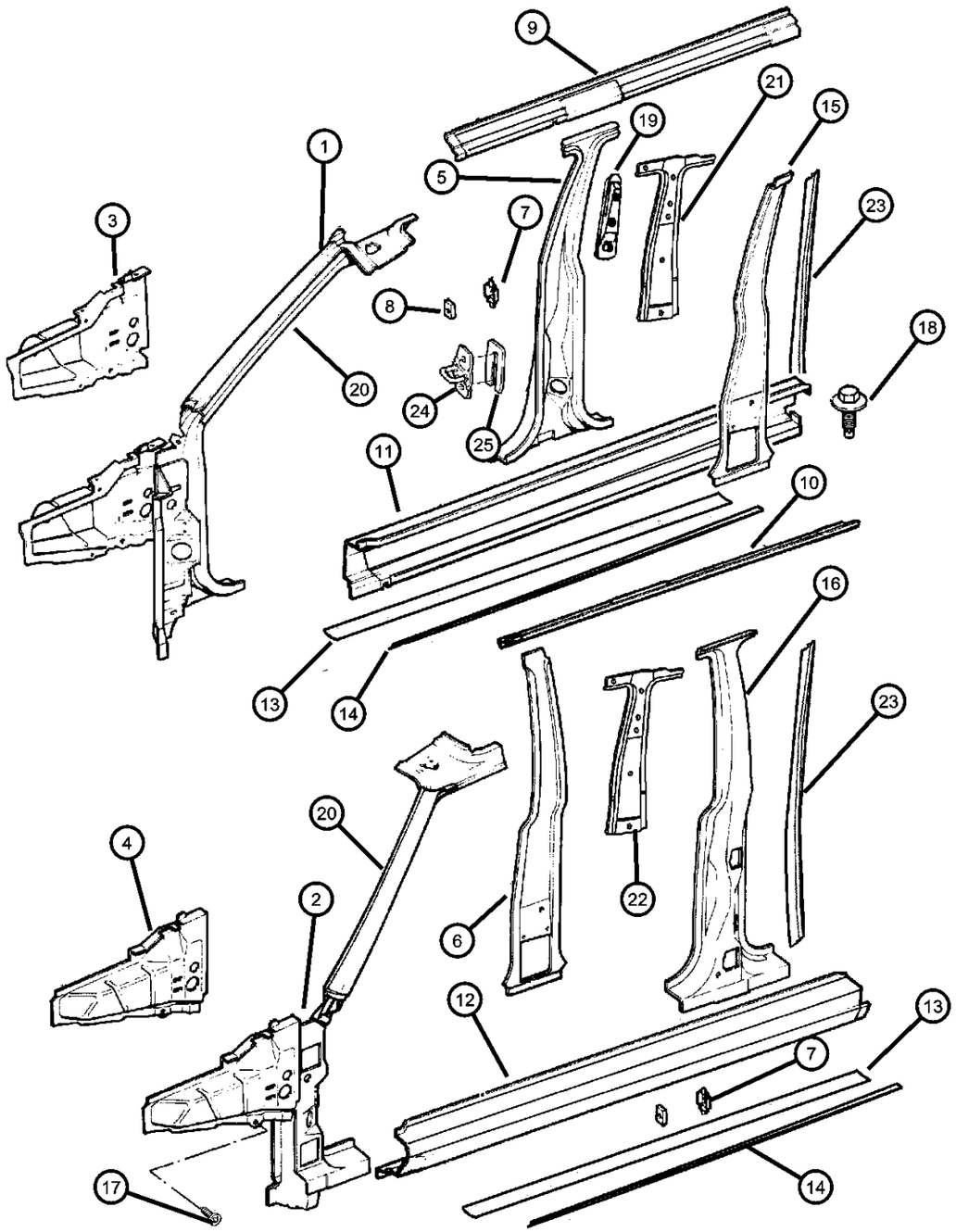

ITEM	PART NUMBER	QTY	LINE	SERIES	BODY	ENGINE	TRANS	TRIM	DESCRIPTION
24	04520288	2			74				STRIKER, Door Latch
25									SPACER, Door Latch Striker
	04520289	AR							
	55075483	AR			74				2.0/2.5 Thick

CHEROKEE (XJ)

SERIES	LINE	BODY	ENGINE	TRANSMISSION
L = LOWLINE	T = JEEP - 2WD B = JEEP - 2WD (RHD) J = JEEP - 4WD U = JEEP - 4WD (RHD)	72 = SPORT UTILITY 2-DR 74 = SPORT UTILITY 4-DR	ENC = 2.5L 4 Cyl Turbo Diesel Engine EPB = 2.5L 4 Cylinder Engine EPE = Engine - 2.5L Power Tech I-4 Cyl. ERH = 4.0L Power Tech I-6 Engine	DDQ = 5-Speed Manual Transmission DGS = 4-Speed Automatic AW4 Transmission DGO = ALL AUTOMATIC TRANSMISSIONS DBB = ALL MANUAL TRANSMISSIONS

AR = use ase required - = Non illustrrated part

Panels, Rear Quarter, 2 Door
Figure SXJ-910

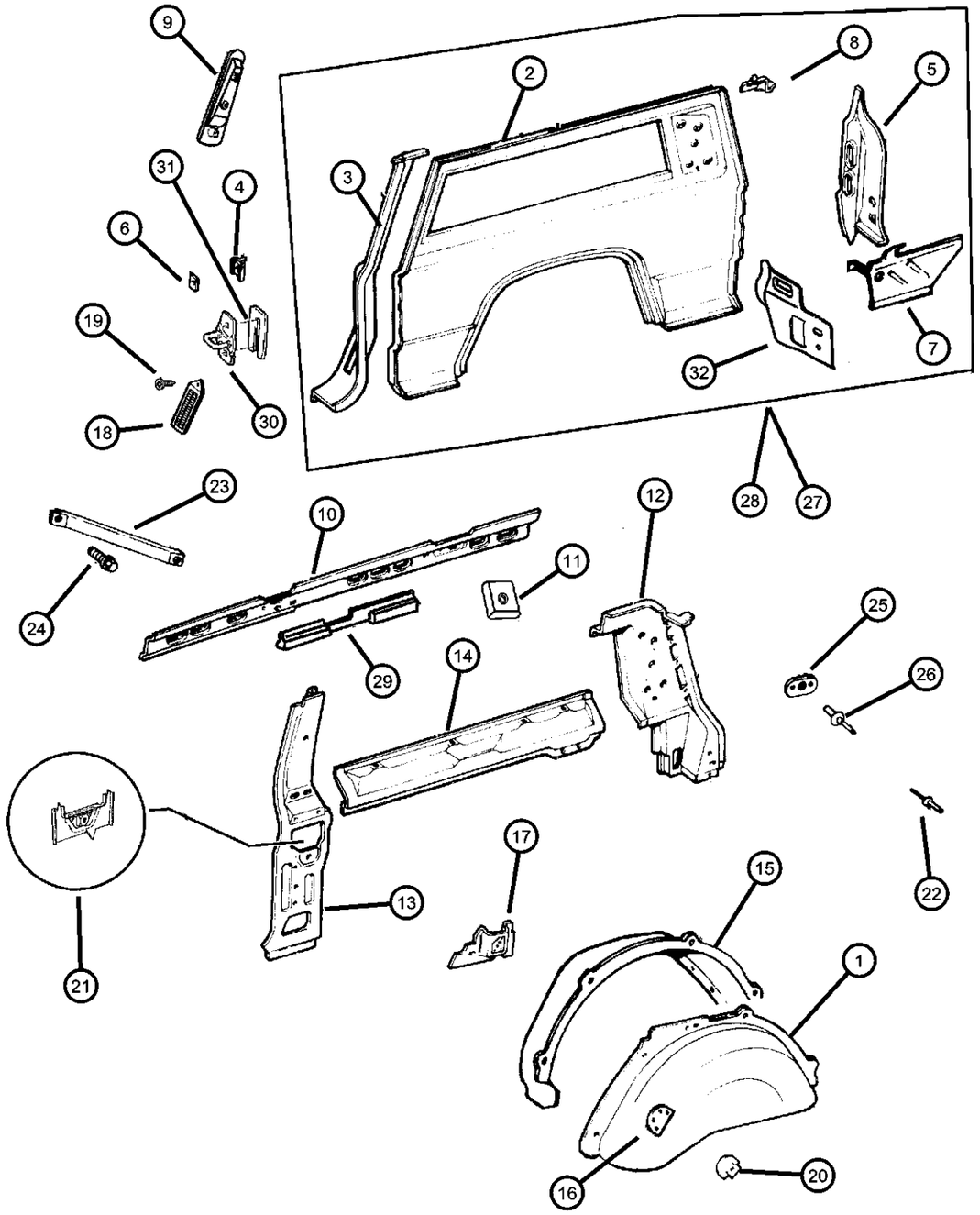

ITEM	PART NUMBER	QTY	LINE	SERIES	BODY	ENGINE	TRANS	TRIM	DESCRIPTION
1									WHEELHOUSE, Rear Inner
	55000147	1			72				Left
	55027694	1			72				Right
2									PANEL, Quarter
	55235426	1			72				Right
	55235427	1			72				Left
3									PILLAR, Rear Cargo Door Lock
	55175674	1			72				Right
	55175675	1			72				Left
4	04674669	2							PLATE, Liftgate Striker
5									PANEL, Taillamp Mounting
	55235510	1			72				Right
	55235511	1			72				Left
6	04520288	2							STRIKER, Door Latch
7									EXTENSION, Rear Floor Pan
	55175960	1			72				Right
	55175961	1			72				Left
8									EXTENSION, Quarter Panel
	55176082	1			72				Right
	55176083	1			72				Left
9	55235692	1			72				TAPPING PLATE, Shoulder Belt
10									RAIL, Roof Side
	55346251	1			72				Right
	55346253	1			72				Left
11	04490111	1			72				TAPPING PLATE, Rail, Roof Side
12									PILLAR, Liftgate Opening
	55176094	1			72				Right
	55176095	1			72				Left
13									REINFORCEMENT, Body Lock Pillar
	55345808AB	1			72				Right
	55345809AB	1			72				Left
14									RAIL, Rear Quarter Belt
	55235382	1			72				Right

CHEROKEE (XJ)

SERIES	LINE	BODY	ENGINE	TRANSMISSION
L = LOWLINE	T = JEEP - 2WD B = JEEP - 2WD (RHD) J = JEEP - 4WD U = JEEP - 4WD (RHD)	72 = SPORT UTILITY 2-DR 74 = SPORT UTILITY 4-DR	ENC = 2.5L 4 Cyl Turbo Diesel Engine EPB = 2.5L 4 Cylinder Engine EPE = Engine - 2.5L Power Tech I-4 Cyl. ERH = 4.0L Power Tech I-6 Engine	DDQ = 5-Speed Manual Transmission DGS = 4-Speed Automatic AW4 Transmission DGO = ALL AUTOMATIC TRANSMISSIONS DBB = ALL MANUAL TRANSMISSIONS

Panels, Rear Quarter, 2 Door
Figure SXJ-910

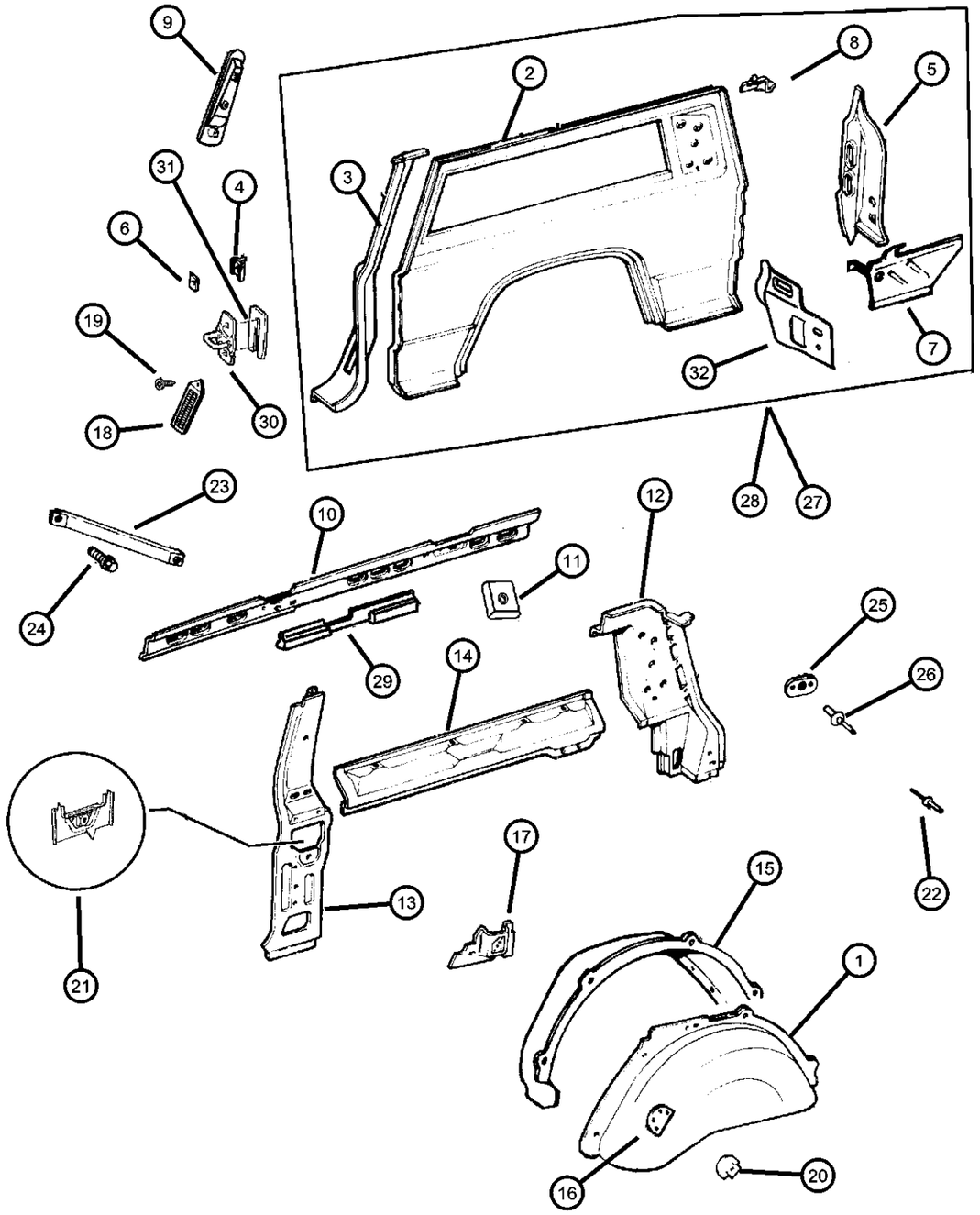

ITEM	PART NUMBER	QTY	LINE	SERIES	BODY	ENGINE	TRANS	TRIM	DESCRIPTION
	55344583	1			72				Left
15									WHEELHOUSE, Rear Outer
	55235346	1			72				Right
	55235347	1			72				Left
16	55026758	1			72				DOUBLER, Wheelhouse
17									BRACKET, Seat
	55001270	1			72				Right
	55001271	1			72				Left
18	55001980	AR							EXHAUSTER, Quarter Panel
19	55001980	AR							SCREW, .164-18x.437, (NOT SERVICED)
20	55001231	1			72				BRACKET, Seat
21	55345291	1			72				BRACKET, Seat Belt Retractor
22	34201032	2			72				RIVET, M4x12 Aluminum
23	55006218	2			72				BRACE, Door Lock
24	34202036	4			72				SCREW, Hex Head, M8x1.25x25
25	04490111	1			72				TAPPING PLATE
26	34201197	2			72				RIVET, Blind, M3.17x10.00
27	55235606	1			72				PANEL, Rear BodyRight
28	55235607	1			72				PANEL, Body SideLeft
29	55006988	1			72				REINFORCEMENT
30	04520288	2							STRIKER, Door Latch
31									SPACER, Door Latch Striker
	04520289	AR							
	55075483	AR							2.0/2.5 Thick
32									REINFORCEMENT, Rear Corner Panel
	55235600	1			72				Right
		1			74				Right
	55235601	1			72				Left
		1			74				Left

CHEROKEE (XJ)

SERIES	LINE	BODY	ENGINE	TRANSMISSION
L = LOWLINE	T = JEEP - 2WD B = JEEP - 2WD (RHD) J = JEEP - 4WD U = JEEP - 4WD (RHD)	72 = SPORT UTILITY 2-DR 74 = SPORT UTILITY 4-DR	ENC = 2.5L 4 Cyl Turbo Diesel Engine EPB = 2.5L 4 Cylinder Engine EPE = Engine - 2.5L Power Tech I-4 Cyl. ERH = 4.0L Power Tech I-6 Engine	DDQ = 5-Speed Manual Transmission DGS = 4-Speed Automatic AW4 Transmission DGO = ALL AUTOMATIC TRANSMISSIONS DBB = ALL MANUAL TRANSMISSIONS

AR = use ase required - = Non illustrrated part

Fuel Filler Housing & Door
Figure SXJ-920

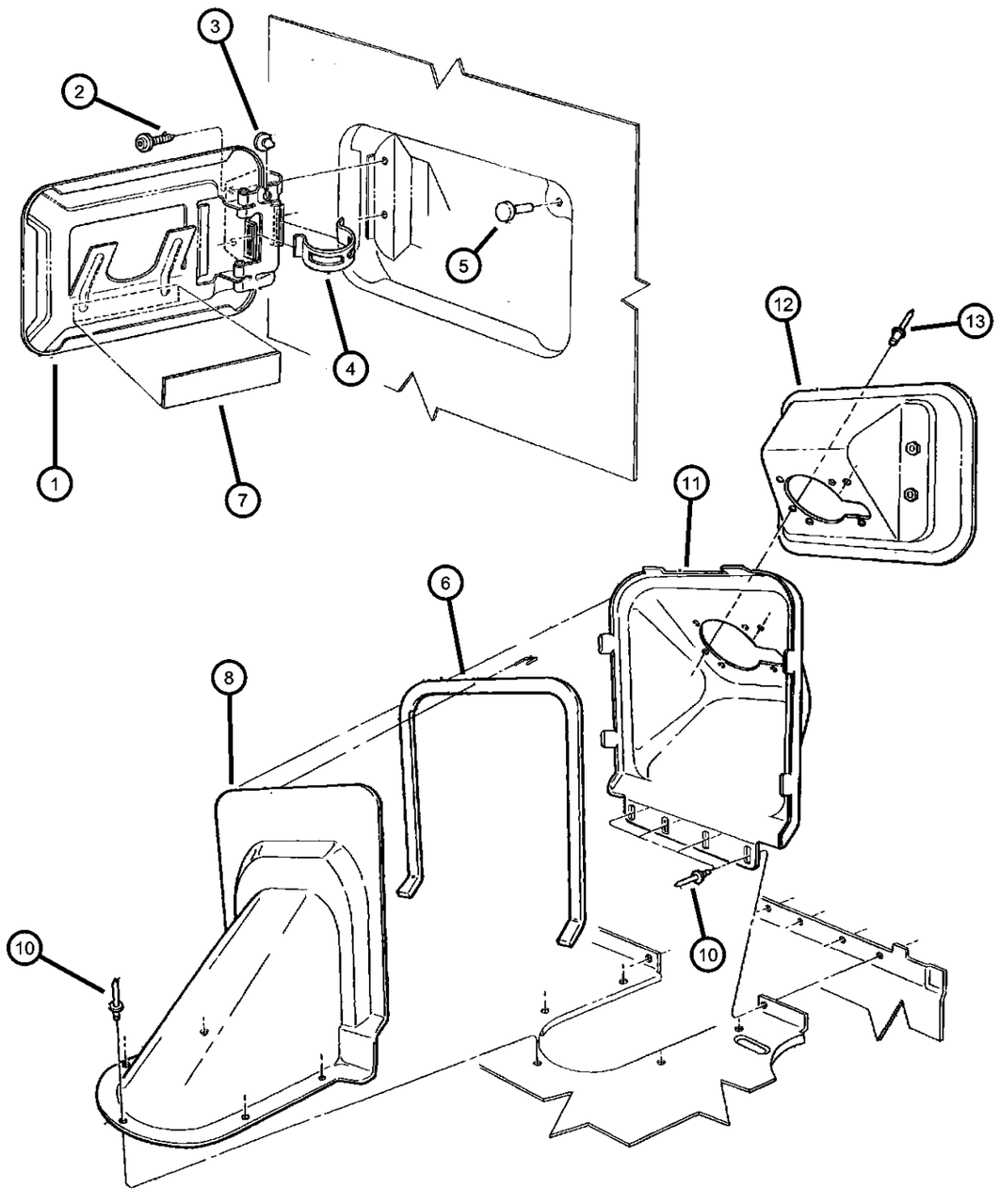

ITEM	PART NUMBER	QTY	LINE	SERIES	BODY	ENGINE	TRANS	TRIM	DESCRIPTION
1	55000819AB	1							DOOR, Fuel Fill
2	34202399	2							SCREW AND WASHER, Round Head, M6x1x16
3	J0635787	1							BUMPER, Fuel Door
4	55004206	1							SPRING, Fuel Filler Door
5	34201812	1							BUMPER, Fuel Door
6	55345178	1							SEAL, Fuel Filler Flange
7									LABEL, Fuel
	J3696394	1	J, T, U						
	J5464900	1							
8	55345623	1							HOUSING, Fuel Filler
-9	55345178	1							SEAL, Fuel Filler Flange
10	34201208	5							RIVET, M4.8x13.23
11	55235533	1							EXTENSION, Fuel Filler Housing
12									HOUSING, Fuel Filler
	52100230	1			74				
		1			72				
13	34201684	2							RIVET, M3.18x2.37

CHEROKEE (XJ)

SERIES	LINE	BODY	ENGINE	TRANSMISSION
L = LOWLINE	T = JEEP - 2WD B = JEEP - 2WD (RHD) J = JEEP - 4WD U = JEEP - 4WD (RHD)	72 = SPORT UTILITY 2-DR 74 = SPORT UTILITY 4-DR	ENC = 2.5L 4 Cyl Turbo Diesel Engine EPB = 2.5L 4 Cylinder Engine EPE = Engine - 2.5L Power Tech I-4 Cyl. ERH = 4.0L Power Tech I-6 Engine	DDQ = 5-Speed Manual Transmission DGS = 4-Speed Automatic AW4 Transmission DGO = ALL AUTOMATIC TRANSMISSIONS DBB = ALL MANUAL TRANSMISSIONS

Panels, Rear Quarter, 4 Door
Figure SXJ-930

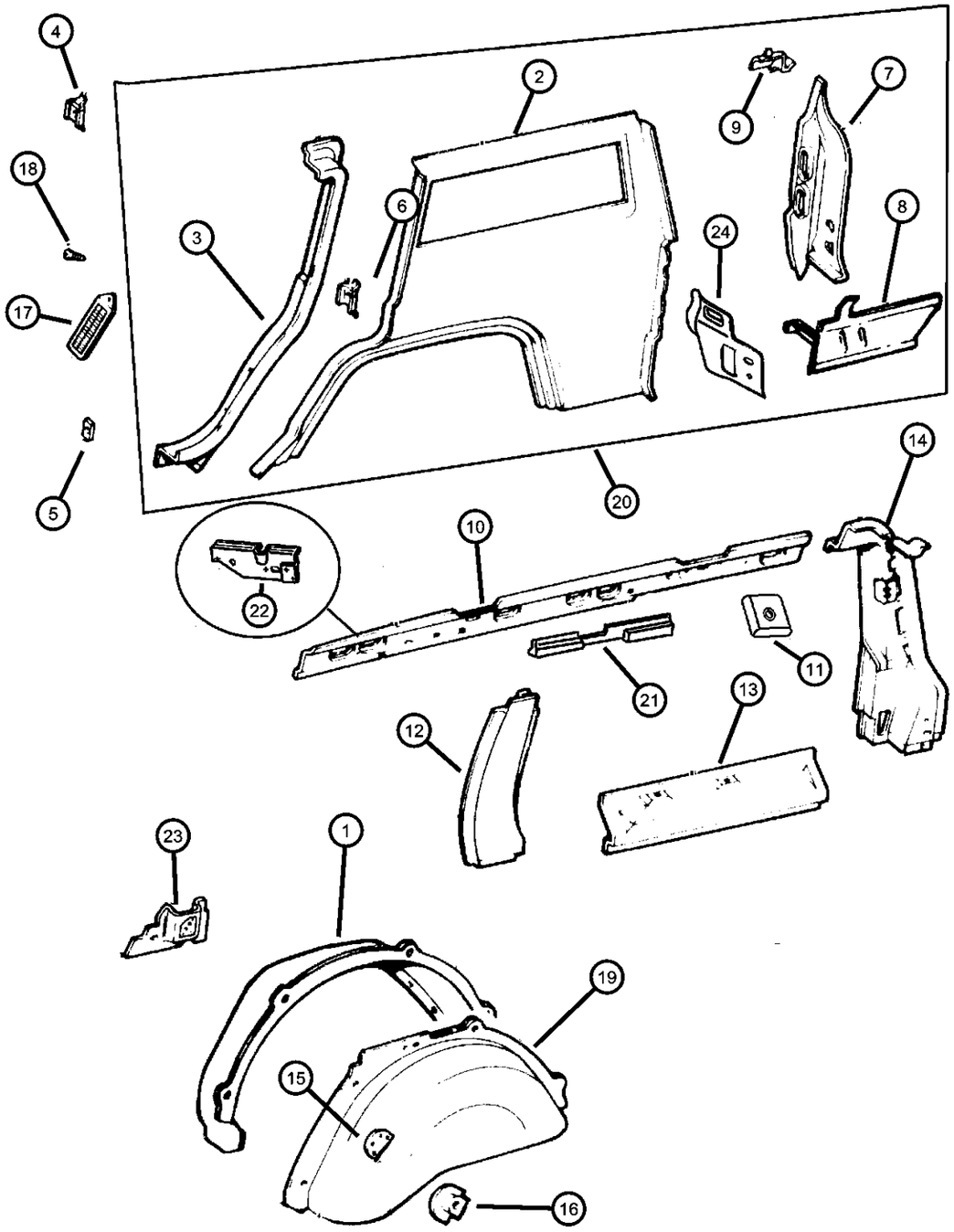

ITEM	PART NUMBER	QTY	LINE	SERIES	BODY	ENGINE	TRANS	TRIM	DESCRIPTION
1									WHEELHOUSE, Rear Outer
	55235346	1			74				Right
	55235347	1			74				Left
2									PANEL, Quarter
	55235424	1			74				Right
	55235425	1			74				Left
3									PILLAR, Front Door Lock
	55175672	1			74				Right
	55175673	1			74				Left
4	04674669	2							PLATE, Liftgate Striker
5	04520288	2							STRIKER, Door Latch
6	55256174	1			74				RETAINER, Door Lock Striker
7									PANEL, Taillamp Mounting
	55235510	1			74				Right
	55235511	1			74				Left
8									EXTENSION, Rear Floor Pan
	55175960	1			74				Right
	55175961	1			74				Left
9									EXTENSION, Quarter Panel
	55176084	1			74				Right
	55176085	1			74				Left
10									RAIL, Roof Side
	55235332	1			74				Right
	55235333	1			74				Left
11	04490111	1			74				TAPPING PLATE, Rail, Roof Side
12									REINFORCEMENT, Body Lock Pillar
	55235792AA	1			74				Right
	55235793AA	1			74				Left
13									RAIL, Rear Quarter Belt
	55235794AA	1			74				Right
	55235795AA	1			74				Left
14									PILLAR, Liftgate Opening
	55176096	1			74				Right

CHEROKEE (XJ)

SERIES	LINE	BODY	ENGINE	TRANSMISSION
L = LOWLINE	T = JEEP - 2WD B = JEEP - 2WD (RHD) J = JEEP - 4WD U = JEEP - 4WD (RHD)	72 = SPORT UTILITY 2-DR 74 = SPORT UTILITY 4-DR	ENC = 2.5L 4 Cyl Turbo Diesel Engine EPB = 2.5L 4 Cylinder Engine EPE = Engine - 2.5L Power Tech I-4 Cyl. ERH = 4.0L Power Tech I-6 Engine	DDQ = 5-Speed Manual Transmission DGS = 4-Speed Automatic AW4 Transmission DGO = ALL AUTOMATIC TRANSMISSIONS DBB = ALL MANUAL TRANSMISSIONS

Panels, Rear Quarter, 4 Door
Figure SXJ-930

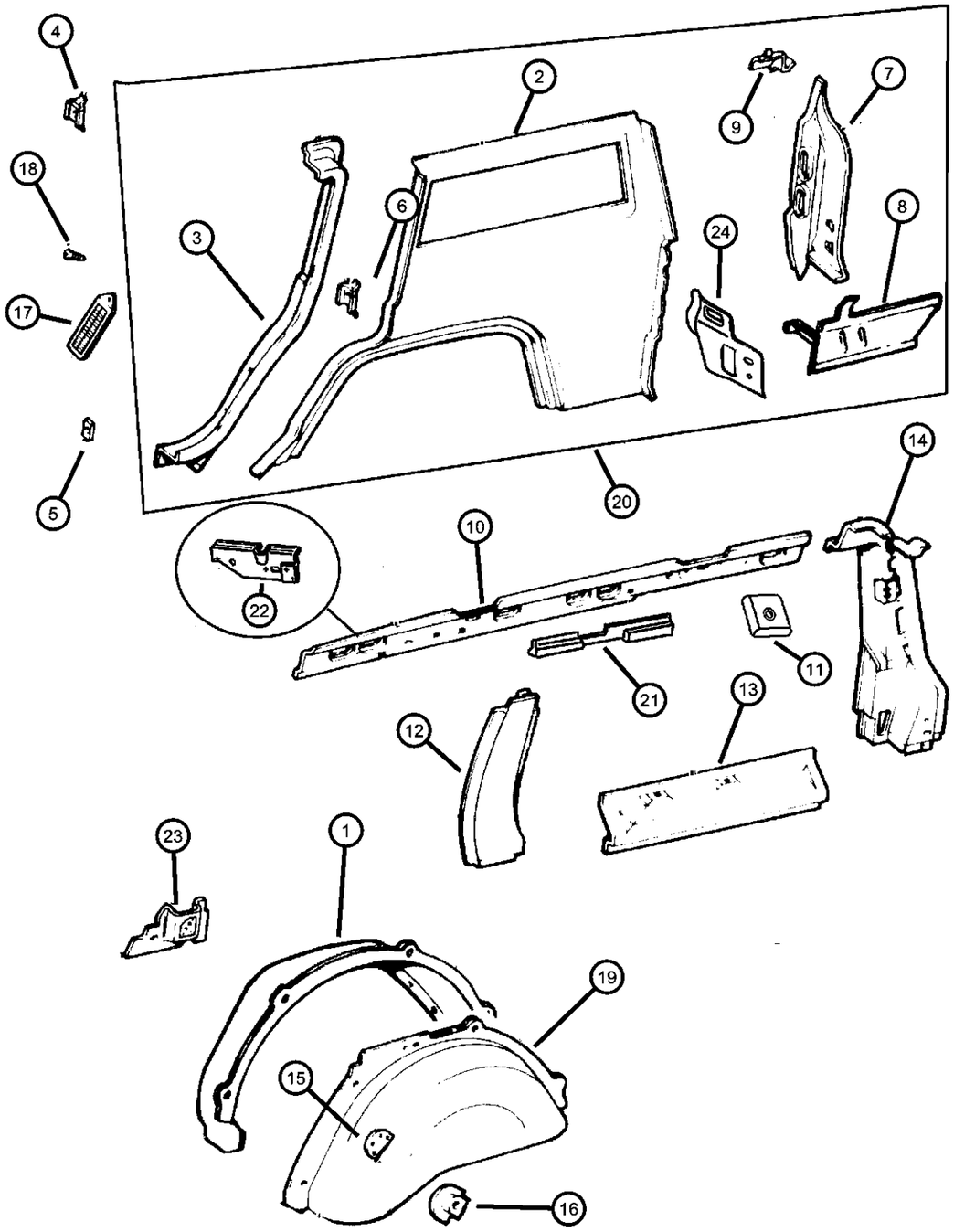

ITEM	PART NUMBER	QTY	LINE	SERIES	BODY	ENGINE	TRANS	TRIM	DESCRIPTION
	55176097	1			74				Left
15	55026758	1			74				DOUBLER, Wheelhouse
16	55001231	1			74				BRACKET, Seat
17	55001980	AR							EXHAUSTER, Quarter Panel
18	55001980	AR							SCREW, .164-18x.437, (NOT SERVICED)
19									WHEELHOUSE, Rear Inner
	55000147	1			74				Left
	55027694	1			74				Right
20									PANEL, Quarter
	55235604	1			74				Right
	55235605	1			74				Left
21	55006988	2			74				REINFORCEMENT
22									REINFORCEMENT
	55235602	1			74				Right
	55235603	1			74				Left
23									BRACKET, Seat
	55001270	1			74				Right
	55001271	1			74				Left
24									REINFORCEMENT, Rear Corner Panel
	55235600	1			72				Right
		1			74				Right
	55235601	1			72				Left
		1			74				Left

CHEROKEE (XJ)

SERIES	LINE	BODY	ENGINE	TRANSMISSION
L = LOWLINE	T = JEEP - 2WD B = JEEP - 2WD (RHD) J = JEEP - 4WD U = JEEP - 4WD (RHD)	72 = SPORT UTILITY 2-DR 74 = SPORT UTILITY 4-DR	ENC = 2.5L 4 Cyl Turbo Diesel Engine EPB = 2.5L 4 Cylinder Engine EPE = Engine - 2.5L Power Tech I-4 Cyl. ERH = 4.0L Power Tech I-6 Engine	DDQ = 5-Speed Manual Transmission DGS = 4-Speed Automatic AW4 Transmission DGO = ALL AUTOMATIC TRANSMISSIONS DBB = ALL MANUAL TRANSMISSIONS

AR = use ase required - = Non illustrrated part

Appliques, Rear Quarter Panel
Figure SXJ-940

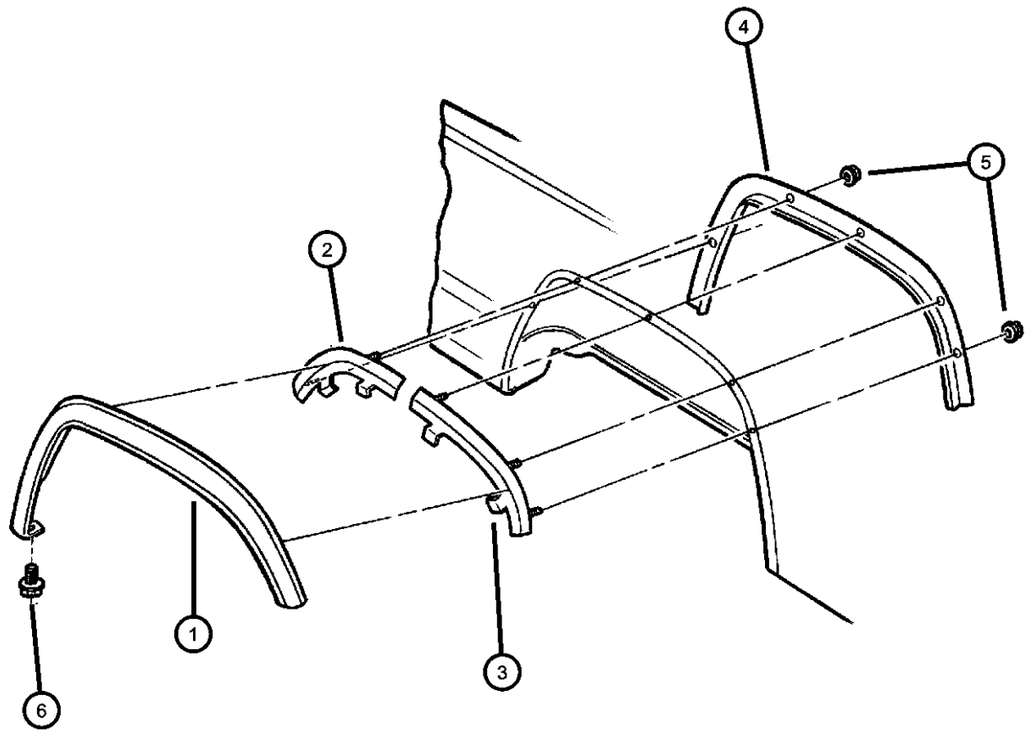

ITEM	PART NUMBER	QTY	LINE	SERIES	BODY	ENGINE	TRANS	TRIM	DESCRIPTION
1									APPLIQUE, Fender Wheel Opening
	5FW74DX8AA	1							Glossy Black, Right
	5FW74PCJAA	1							Dark Montego Blue, Right
	5FW74PR4AA	1							Red, Right
	5FW74RJ-NAA	1							Moss Green, Right
	5FW74SW1AA	1							White, Right
	5FW74TQ7AA	1							Gunmetal Pearl, Right
	5FW75DX8AA	1							Glossy Black, Left
	5FW75PCJAA	1							Dark Montego Blue, Left
	5FW75PR4AA	1							Red, Left
	5FW75RJ-NAA	1							Moss Green, Left
	5FW75SW1AA	1							White, Left
	5FW75TQ7AA	1							Gunmetal Pearl, Left
	5FW76DX9AA	1							Flat Black, Right
	5FW77DX9AA	1							Flat Black, Left
2									RETAINER, Applique
	55155678AB	1							Right
	55155679AA	1							Left
3									RETAINER, Applique
	55155680AA	1							Right
	55155681AA	1							Left
4									LINER, Fender Side
	55175898	1							Right
	55175899	1							Left
5	J4200408	10							NUT AND WASHER, Hex Nut-Coned Washer, M5 x 0.80
6	00153185	2							SCREW, .164-18x.500

CHEROKEE (XJ)

SERIES	LINE	BODY	ENGINE	TRANSMISSION
L = LOWLINE	T = JEEP - 2WD B = JEEP - 2WD (RHD) J = JEEP - 4WD U = JEEP - 4WD (RHD)	72 = SPORT UTILITY 2-DR 74 = SPORT UTILITY 4-DR	ENC = 2.5L 4 Cyl Turbo Diesel Engine EPB = 2.5L 4 Cylinder Engine EPE = Engine - 2.5L Power Tech I-4 Cyl. ERH = 4.0L Power Tech I-6 Engine	DDQ = 5-Speed Manual Transmission DGS = 4-Speed Automatic AW4 Transmission DGO = ALL AUTOMATIC TRANSMISSIONS DBB = ALL MANUAL TRANSMISSIONS

Roof Panel
Figure SXJ-1110

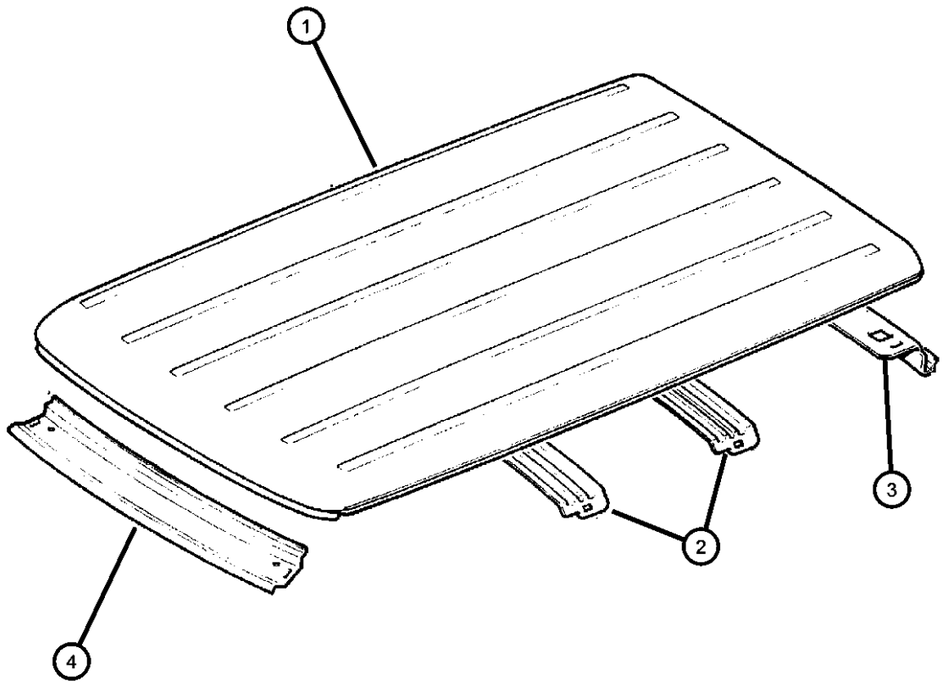

ITEM	PART NUMBER	QTY	LINE	SERIES	BODY	ENGINE	TRANS	TRIM	DESCRIPTION
1	55175156	1							PANEL, Roof
2	55000138	2							SUPPORT, Roof
3									PANEL, Liftgate Opening
	55176168	1	B, U						
	55176169	1	J, T						
4	55235339	1							HEADER, Windshield

CHEROKEE (XJ)

SERIES	LINE	BODY	ENGINE	TRANSMISSION
L = LOWLINE	T = JEEP - 2WD B = JEEP - 2WD (RHD) J = JEEP - 4WD U = JEEP - 4WD (RHD)	72 = SPORT UTILITY 2-DR 74 = SPORT UTILITY 4-DR	ENC = 2.5L 4 Cyl Turbo Diesel Engine EPB = 2.5L 4 Cylinder Engine EPE = Engine - 2.5L Power Tech I-4 Cyl. ERH = 4.0L Power Tech I-6 Engine	DDQ = 5-Speed Manual Transmission DGS = 4-Speed Automatic AW4 Transmission DGO = ALL AUTOMATIC TRANSMISSIONS DBB = ALL MANUAL TRANSMISSIONS

Lift Door, Latch and Hinges
Figure SXJ-1310

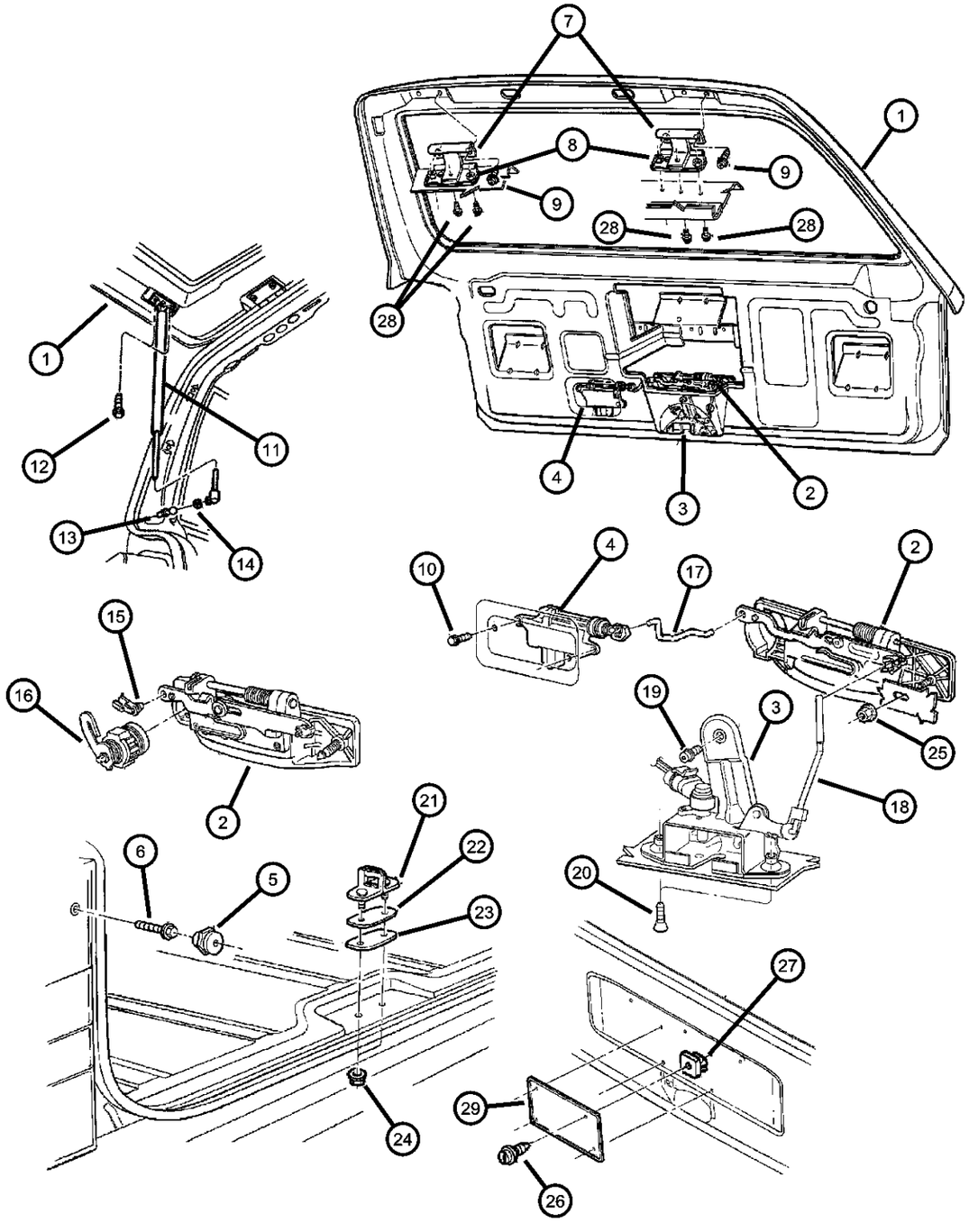

ITEM	PART NUMBER	QTY	LINE	SERIES	BODY	ENGINE	TRANS	TRIM	DESCRIPTION
1	55174895	1							LIFTGATE
2	55076016	1							HANDLE, Liftgate
3	55235643	1							LATCH, Liftgate
4	55295716	1							ACTUATOR, Liftgate Lock
5	55254847	2							BUMPER, Liftgate
6	06035646	2							BOLT, Hex Head, .312-18
7	55076225	2							HINGE, Liftgate
8	55235699	2							SEAL, Hinge
9	06503757	10							SCREW AND WASHER, Hex Head, M8-1.25x22.00
10	06503757	10							SCREW, .250-14x.750, (NOT SERVICED)
11	55076208	2							PROP, Liftgate
12	55076208	2							SCREW, M6x1.00x20, (NOT SERVICED)
13	55075205AB	2							BALL STUD, Liftgate Glass
14	55075205AB	2							WASHER, (NOT SERVICED)
15	05257479	1							CLIP, Door Lock Rod
16	05257479	1							LOCK CYLINDER, Decklid, See Group 23c, (NOT SERVICED)
17	55076377	1							LINK, Latch Locking
18	55075860	1							ROD, Liftgate Handle to Latch
19	06503154	1							SCREW AND WASHER, Round Head, M8x1.25x20
20	06502623	2							SCREW, Flat Head, M8x1.25x23
21	55296077	1							STRIKER, Door Latch
22	55076342	AR							STRIKER, Seal Plate
23	55076341	1							STRIKER, Liftgate
24	06101761	2							NUT, Coned Washer, M10 x 1.50
25	06501730	1							NUT, Retainer, M6 x 1.00
26	06502407	4							SCREW AND WASHER, Hex Head, M6x1x20, SETUP
27	06502407	4							NUT, (NOT SERVICED)
28	06503764	6							SCREW AND WASHER, Hex Head, M8x1.25x25
29	06503764	6							LICENSE PLATE KIT, (NOT SERVICED)

CHEROKEE (XJ)

SERIES	LINE	BODY	ENGINE	TRANSMISSION
L = LOWLINE	T = JEEP - 2WD B = JEEP - 2WD (RHD) J = JEEP - 4WD U = JEEP - 4WD (RHD)	72 = SPORT UTILITY 2-DR 74 = SPORT UTILITY 4-DR	ENC = 2.5L 4 Cyl Turbo Diesel Engine EPB = 2.5L 4 Cylinder Engine EPE = Engine - 2.5L Power Tech I-4 Cyl. ERH = 4.0L Power Tech I-6 Engine	DDQ = 5-Speed Manual Transmission DGS = 4-Speed Automatic AW4 Transmission DGO = ALL AUTOMATIC TRANSMISSIONS DBB = ALL MANUAL TRANSMISSIONS

Rack, Roof Luggage
Figure SXJ-1610

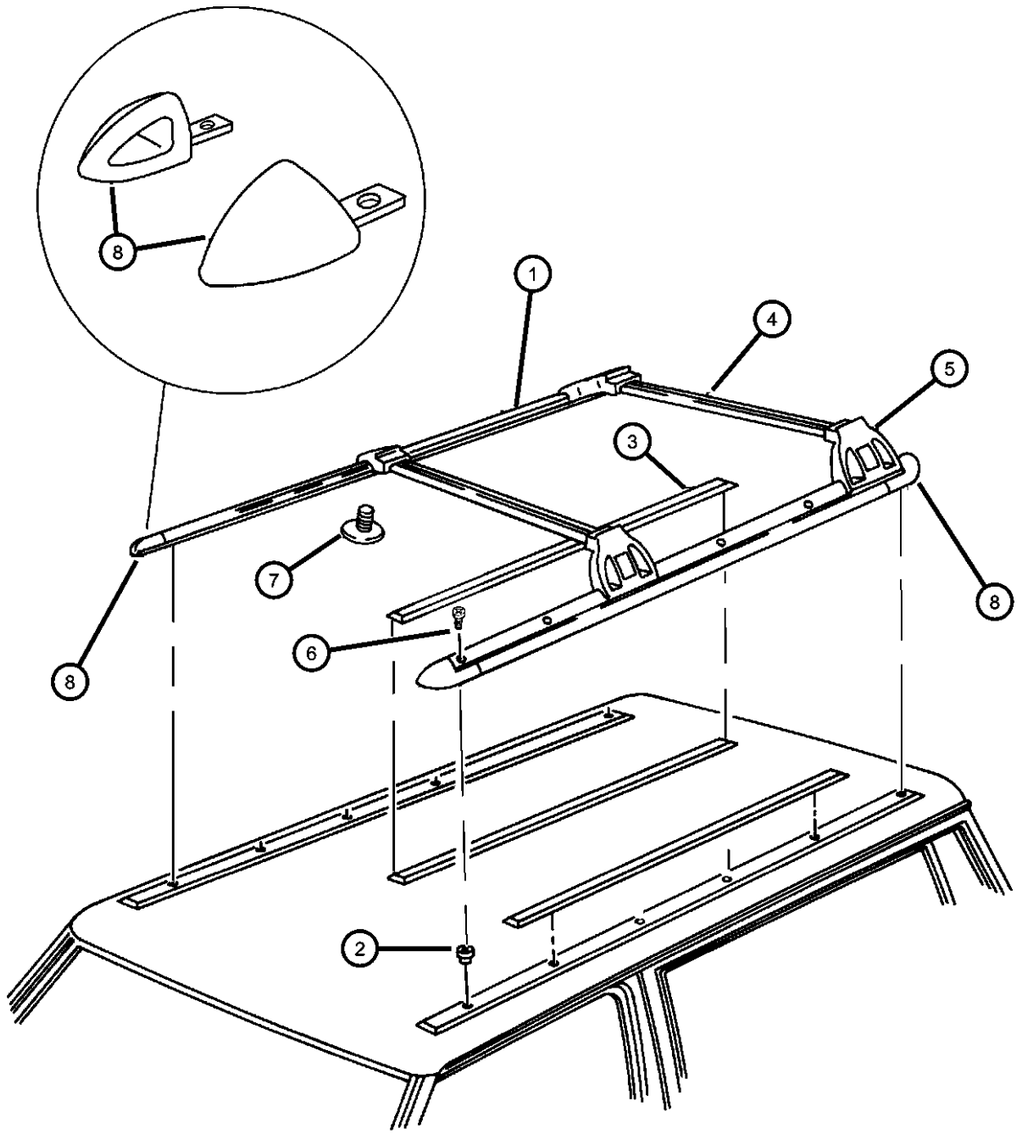

ITEM	PART NUMBER	QTY	LINE	SERIES	BODY	ENGINE	TRANS	TRIM	DESCRIPTION
1									RAIL, Luggage Rack Side
	55075115	2							
	55235809AA	1	B, U						AUSTRALIA, JAPAN
2	06503910	12							NUT
3	55075106	4							SKID STRIP, Roof Rack
4	55235239AB	2							CROSS BAR, Roof Rack
5	55074633	4							STANCHION, Luggage Rack Cross Bar
6	06502667	12							SCREW, Pan Head, M6x1.00x16.00
7	06035499	4							SCREW, Pan Head Tapping, .242-10x.625
8									CAP, Side Rail
	55075084	2							Right
	55075085	2							Left
-9	04897128AA	2							SPRING, Tension, Used Inside Crossrail

CHEROKEE (XJ)

SERIES	LINE	BODY	ENGINE	TRANSMISSION
L = LOWLINE	T = JEEP - 2WD B = JEEP - 2WD (RHD) J = JEEP - 4WD U = JEEP - 4WD (RHD)	72 = SPORT UTILITY 2-DR 74 = SPORT UTILITY 4-DR	ENC = 2.5L 4 Cyl Turbo Diesel Engine EPB = 2.5L 4 Cylinder Engine EPE = Engine - 2.5L Power Tech I-4 Cyl. ERH = 4.0L Power Tech I-6 Engine	DDQ = 5-Speed Manual Transmission DGS = 4-Speed Automatic AW4 Transmission DGO = ALL AUTOMATIC TRANSMISSIONS DBB = ALL MANUAL TRANSMISSIONS